Smarter. Greener. Together.

Industrial Automation Headquarters

Taiwan: Delta Electronics, Inc.
Taoyuan Technology Center
No.18, Xinglong Rd., Taoyuan District,
Taoyuan City 33068, Taiwan
TEL: +886-3-362-6301 / FAX: +886-3-371-6301

Asia

China: Delta Electronics (Shanghai) Co., Ltd.
No.182 Minyu Rd., Pudong Shanghai, P.R.C.
Post code : 201209
TEL: +86-21-6872-3988 / FAX: +86-21-6872-3996
Customer Service: 400-820-9595

Japan: Delta Electronics (Japan), Inc.
Industrial Automation Sales Department
2-1-14 Shibadaimon, Minato-ku
Tokyo, Japan 105-0012
TEL: +81-3-5733-1155 / FAX: +81-3-5733-1255

Korea: Delta Electronics (Korea), Inc.
1511, 219, Gasan Digital 1-Ro., Geumcheon-gu,
Seoul, 08501 South Korea
TEL: +82-2-515-5305 / FAX: +82-2-515-5302

Singapore: Delta Energy Systems (Singapore) Pte Ltd.
4 Kaki Bukit Avenue 1, #05-04, Singapore 417939
TEL: +65-6747-5155 / FAX: +65-6744-9228

India: Delta Electronics (India) Pvt. Ltd.
Plot No.43, Sector 35, HSIIDC Gurgaon,
PIN 122001, Haryana, India
TEL: +91-124-4874900 / FAX: +91-124-4874945

Thailand: Delta Electronics (Thailand) PCL.
909 Soi 9, Moo 4, Bangpoo Industrial Estate (E.P.Z),
Pattana 1 Rd., T.Phraksa, A.Muang,
Samutprakarn 10280, Thailand
TEL: +66-2709-2800 / FAX: +66-2709-2827

Australia: Delta Electronics (Australia) Pty Ltd.
Unit 20-21/45 Normanby Rd., Notting Hill Vic 3168, Australia
TEL: +61-3-9543-3720

Americas

USA: Delta Electronics (Americas) Ltd.
5101 Davis Drive, Research Triangle Park, NC 27709, U.S.A.
TEL: +1-919-767-3813 / FAX: +1-919-767-3969

Brazil: Delta Electronics Brazil
Rua Itapeva, 26 - 3°, andar Edificio Itapeva,
One - Bela Vista 01332-000 - São Paulo - SP - Brazil
TEL: +55-12-3932-2300 / FAX: +55-12-3932-237

Mexico: Delta Electronics International Mexico S.A. de C.V.
Gustavo Baz No. 309 Edificio E PB 103
Colonia La Loma, CP 54060
Tlalnepantla, Estado de México
TEL: +52-55-3603-9200

EMEA

EMEA Headquarters: Delta Electronics (Netherlands) B.V.
Sales: Sales.IA.EMEA@deltaww.com
Marketing: Marketing.IA.EMEA@deltaww.com
Technical Support: iatechnicalsupport@deltaww.com
Customer Support: Customer-Support@deltaww.com
Service: Service.IA.emea@deltaww.com
TEL: +31(0)40 800 3900

BENELUX: Delta Electronics (Netherlands) B.V.
Automotive Campus 260, 5708 JZ Helmond, The Netherlands
Mail: Sales.IA.Benelux@deltaww.com
TEL: +31(0)40 800 3900

DACH: Delta Electronics (Netherlands) B.V.
Coesterweg 45, D-59494 Soest, Germany
Mail: Sales.IA.DACH@deltaww.com
TEL: +49(0)2921 987 0

France: Delta Electronics (France) S.A.
ZI du bois Challand 2, 15 rue des Pyrénées,
Lisses, 91090 Evry Cedex, France
Mail: Sales.IA.FR@deltaww.com
TEL: +33(0)1 69 77 82 60

Iberia: Delta Electronics Solutions (Spain) S.L.U
Ctra. De Villaverde a Vallecas, 265 1º Dcha Ed.
Hormigueras – P.I. de Vallecas 28031 Madrid
TEL: +34(0)91 223 74 20

Carrer Llacuna 166, 08018 Barcelona, Spain
Mail: Sales.IA.Iberia@deltaww.com

Italy: Delta Electronics (Italy) S.r.l.
Via Meda 2–22060 Novedrate(CO)
Piazza Grazioli 18 00186 Roma Italy
Mail: Sales.IA.Italy@deltaww.com
TEL: +39 039 8900365

Russia: Delta Energy System LLC
Vereyskaya Plaza II, office 112 Vereyskaya str.
17 121357 Moscow Russia
Mail: Sales.IA.RU@deltaww.com
TEL: +7 495 644 3240

Turkey: Delta Greentech Elektronik San. Ltd. Sti. (Turkey)
Şerifali Mah. Hendem Cad. Kule Sok. No:16-A
34775 Ümraniye – İstanbul
Mail: Sales.IA.Turkey@deltaww.com
TEL: + 90 216 499 9910

MEA: Eltek Dubai (Eltek MEA DMCC)
OFFICE 2504, 25th Floor, Saba Tower 1,
Jumeirah Lakes Towers, Dubai, UAE
Mail: Sales.IA.MEA@deltaww.com
TEL: +971(0)4 2690148

*We reserve the right to change the information in this manual without prior notice.

Delta Basic Compact Drive - ME300 Series User Manual

Delta Basic Compact Drive
ME300 Series User Manual

www.deltaww.com

Smarter. Greener. Together.

Copyright notice

©Delta Electronics, Inc. All rights reserved.

All information contained in this user manual is the exclusive property of Delta Electronics Inc. (hereinafter referred to as "Delta ") and is protected by copyright law and all other laws. Delta retains the exclusive rights of this user manual in accordance with the copyright law and all other laws. No parts in this manual may be reproduced, transmitted, transcribed, translated or used in any other ways without the prior consent of Delta.

Limitation of Liability

The contents of this user manual are only for the use of the AC motor drives manufactured by Delta. Except as defined in special mandatory laws, Delta provides this user manual “as is” and does not offer any kind of warranty through this user manual for using the product, either express or implied, including but not limited to the following: (i) this product will meet your needs or expectations; (ii) the information contained in the product is current and correct; (iii) the product does not infringe any rights of any other person. You shall bear your own risk to use this product.

In no event shall Delta, its subsidiaries, affiliates, managers, employees, agents, partners and licensors be liable for any direct, indirect, incidental, special, derivative or consequential damages (including but not limited to the damages for loss of profits, goodwill, use or other intangible losses) unless the laws contains special mandatory provisions to the contrary.

Delta reserves the right to make changes to the user manual and the products described in the user manual without prior notice and afterwards.

PLEASE READ PRIOR TO INSTALLATION FOR SAFETY.

- ☑ Disconnect AC input power before connecting any wiring to the AC motor drive.
- ☑ Even if the power has been turned off, a charge may still remain in the DC-link capacitors with hazardous voltages before the POWER LED is OFF. Do not touch the internal circuits and components.
- ☑ There are highly sensitive MOS components on the printed circuit boards. These components are especially sensitive to static electricity. Take anti-static measures before touching these components or the circuit boards.
- ☑ Never modify the internal components or wiring.
- ☑ Ground the AC motor drive by using the ground terminal. The grounding method must comply with the laws of the country where the AC motor drive is to be installed.
- ☑ DO NOT install the AC motor drive in a location with high temperature, direct sunlight or inflammable materials or gases.

- ☑ Never connect the AC motor drive output terminals U/T1, V/T2 and W/T3 directly to the AC mains circuit power supply.
- ☑ The rated voltage of power system to install motor drives is listed below. Ensure that the installation voltage is in the correct range when installing a motor drive.
  For 115V models, the range is between 85–132 V.
  For 230V models, the range is between 170–264 V.
  For 460V models, the range is between 323–528 V.
- ☑ Refer to the table below for short circuit rating:

Model (Power)	Short circuit rating
115V	5 kA
230V	5 kA
460V	5 kA

- ☑ Only qualified persons are allowed to install, wire and maintain the AC motor drives.
- ☑ Even if the three-phase AC motor is stopped, a charge with hazardous voltages may still remain in the main circuit terminals of the AC motor drive.
- ☑ If you store the AC motor drive in a not-charged condition for more than three months, the ambient temperature should not be higher than 30°C. Storage longer than one year is not recommended and could result in the degradation of the electrolytic capacitors.
- ☑ Pay attention to the following when transporting and installing this package (including wooden crate, wood stave and carton box).
  1 If you need to sterilize or deworm the wooden crate or carton box, do not use steamed sterilization or you will damage the VFD. Use other methods to sterilize or deworm.
  2 You may use high temperatures to sterilize or deworm. Leave the packaging materials in an environment of over 56°C for thirty minutes.
- ☑ Connect the drive to a three-phase three-wire or three-phase four-wire Wye system to comply with UL standards.

	☑ If the drive generates leakage current over AC 3.5 mA or DC 10 mA on a grounding conductor, compliance with local grounding regulations or IEC61800-5-1 standard is the minimum requirement for grounding.

NOTE

1. In the pictures in this manual, the cover or safety shield is disassembled only when explaining the details of the product. During operation, install the top cover and wiring correctly according to the provisions. Refer to the operation descriptions in the manual to ensure safety.
2. The figures in this instruction are only for reference and may be slightly different depending on your model, but it will not affect your customer rights.
3. The content of this manual may be revised without prior notice. Consult our distributors or download the latest version at http://www.deltaww.com/iadownload_acmotordrive.

Table of Contents

CHAPTER 1 INTRODUCTION 1-1
1-1 Nameplate Information 1-2
1-2 Model Name 1-3
1-3 Serial Number 1-3
1-4 Apply After Service by Mobile Device 1-4
1-5 RFI Jumper 1-5
CHAPTER 2 DIMENSIONS 2-1
2-1 Frame A 2-2
2-2 Frame B 2-3
2-3 Frame C 2-4
2-4 Frame D 2-5
CHAPTER 3 INSTALLATION 3-1
3-1 Mounting Clearance 3-2
3-2 Airflow and Power Dissipation 3-4
CHAPTER 4 WIRING 4-1
4-1 System Wiring Diagram 4-3
4-2 Wiring 4-4
CHAPTER 5 MAIN CIRCUIT TERMINALS 5-1
5-1 Main Circuit Diagram 5-4
5-2 Main Circuit Terminals 5-5
CHAPTER 6 CONTROL TERMINALS 6-1
6-1 Control Terminals 6-2
CHAPTER 7 OPTIONAL ACCESSORIES 7-1
7-1 Brake Resistors and Brake Units Used in AC Motor Drives 7-2
7-2 Magnetic Contactor / Air Circuit Breaker and Non-fuse Circuit Breaker 7-6
7-3 Fuse Specification Chart 7-10
7-4 AC / DC Reactor 7-12
7-5 Zero Phase Reactors 7-28
7-6 EMC Filter 7-31
7-7 EMC Shield Plate 7-35
7-8 Capacitive Filter 7-38
7-9 NEMA 1 / UL Type 1 Kit 7-40
7-10 Fan Kit 7-47
7-11 DIN-Rail Mounting 7-48
7-12 Mounting Adapter Plate 7-50
7-13 Digital Keypad–KPC-CC01, KPC-CE01 7-55
CHAPTER 8 OPTION CARD 8-1

CHAPTER 9 SPECIFICATION 9-1
9-1 115V Series 9-2
9-2 230V Series 9-3
9-3 460V Series 9-5
9-4 General Specifications 9-6
9-5 Environment for Operation, Storage and Transportation 9-7
9-6 Derating for Ambient Temperature, Altitude and Carrier Frequency 9-8
CHAPTER 10 DIGITAL KEYPAD 10-1
10-1 Keyboard panel 10-2
10-2 Descriptions of keypad functions 10-2
10-3 Keypad operation process 10-3
10-4 Reference Table for the 16-segment Digital Keypad LED Display 10-7
CHAPTER 11 SUMMARY OF PARAMETERS SETTINGS 11-1
CHAPTER 12 DESCRIPTION OF PARAMETER SETTINGS 12-00-1
12-1 Description of Parameter Settings 12-00-2
00 Drive Parameters 12.1-00-2
01 Basic Parameters 12.1-01-1
02 Digital Input / Output Parameters 12.1-02-1
03 Analog Input / Output Parameters 12.1-03-1
04 Multi-Stage Speed Parameters 12.1-04-1
05 Motor Parameters 12.1-05-1
06 Protection Parameters (1) 12.1-06-1
07 Special Parameters 12.1-07-1
08 High-function PID Parameters 12.1-08-1
09 Communication Parameters 12.1-09-1
10 Speed Feedback Control Parameters 12.1-10-1
11 Advanced Parameters 12.1-11-1
12 Function Parameters 12.1-12-1
13 Macro / User-Defined Macro 12.1-13-1
14 Protection Parameters (2) 12.1-14-1
12-2 Adjustment & Application 12.2-1
CHAPTER 13 WARNING CODES 13-1
CHAPTER 14 ERROR CODES 14-1
CHAPTER 15 SAFE TORQUE OFF FUNCTION 15-1
15-1 Basic Function Description 15-2
15-2 Safe Torque Off Terminal Function Description 15-3
15-3 Wiring Diagram 15-4
15-4 Failure Rate of the Drive Safety Function 15-5
15-5 Reset the Parameter Settings 15-5
15-6 Timing Diagram Description 15-6
15-7 Error Code and Troubleshooting Instructions 15-9
15-8 Test and Fault Confirmation 15-11

Issued Edition: 03
Firmware Version: V1.XX (Refer to Parameter 00-06 on the product to get the firmware version.)
Issued Date: 2021/08

Chapter 1 Introduction

1-1 Nameplate Information

1-2 Model Name

1-3 Serial Number

1-4 Apply After Service by Mobile Device

1-5 RFI Jumper

After receiving the AC motor drive, check for the following:

1. Inspect the unit after unpacking to ensure that it was not damaged during shipment. Make sure that the part number printed on the package corresponds with the part number indicated on the nameplate.
2. Make sure that the mains voltage is within the range indicated on the nameplate. Install the AC motor drive according to this manual.
3. Before applying power, make sure that all devices, including mains power, motor, control board, and digital keypad, are connected correctly.
4. When wiring the AC motor drive, make sure that the wiring of input terminals “R/L1, S/L2, T/L3”, and output terminals "U/T1, V/T2, W/T3” are correct to prevent damage to the drive.
5. When power is applied, select the language and set values for parameters with the digital keypad. When executing a trial run, begin with a low speed and then gradually increase the speed until the desired speed is reached.

1-1 Nameplate Information

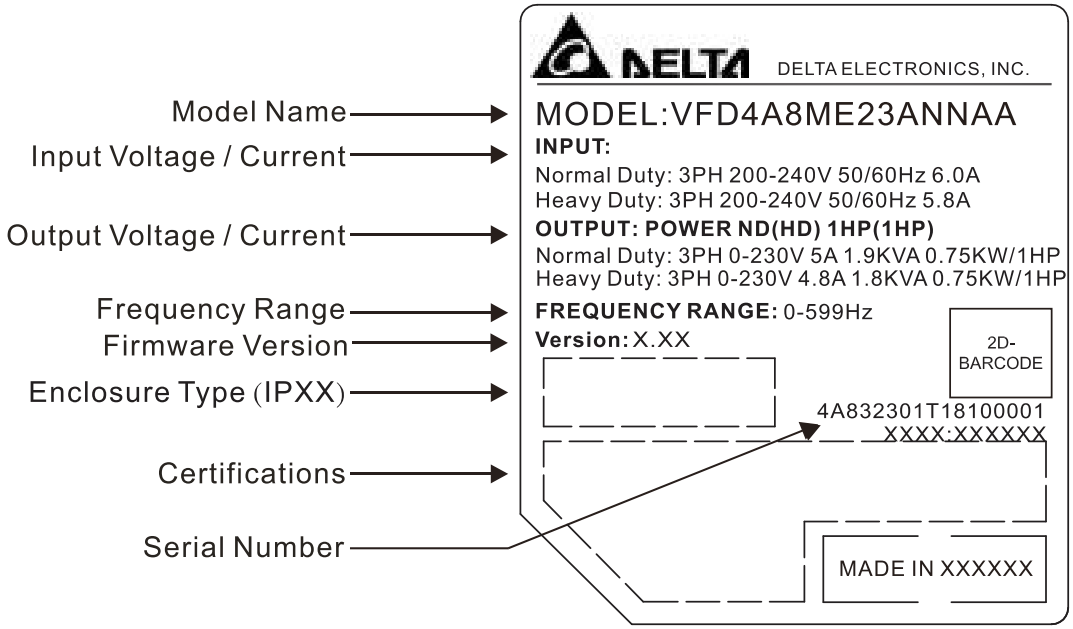

1-2 Model Name

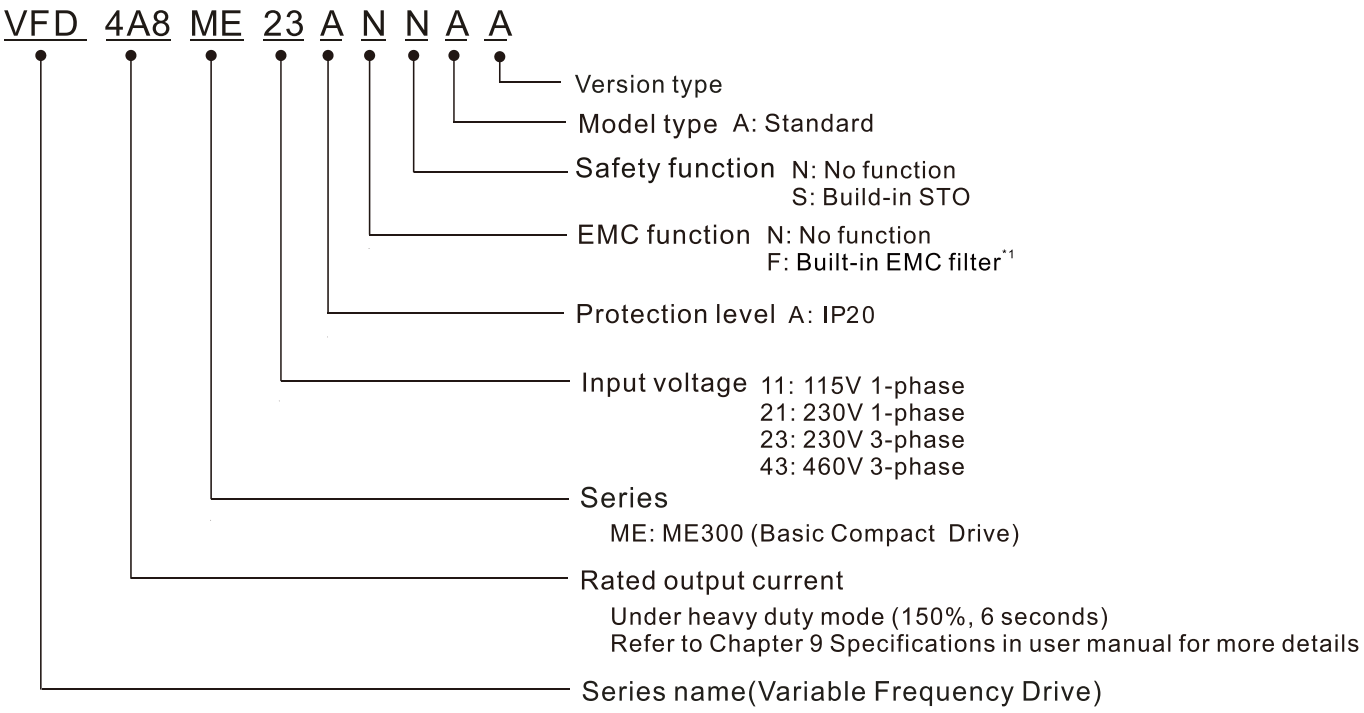

*1. For 230V input voltage (one-phase) and 460V input voltage (three-phase) models only.

1-3 Serial Number

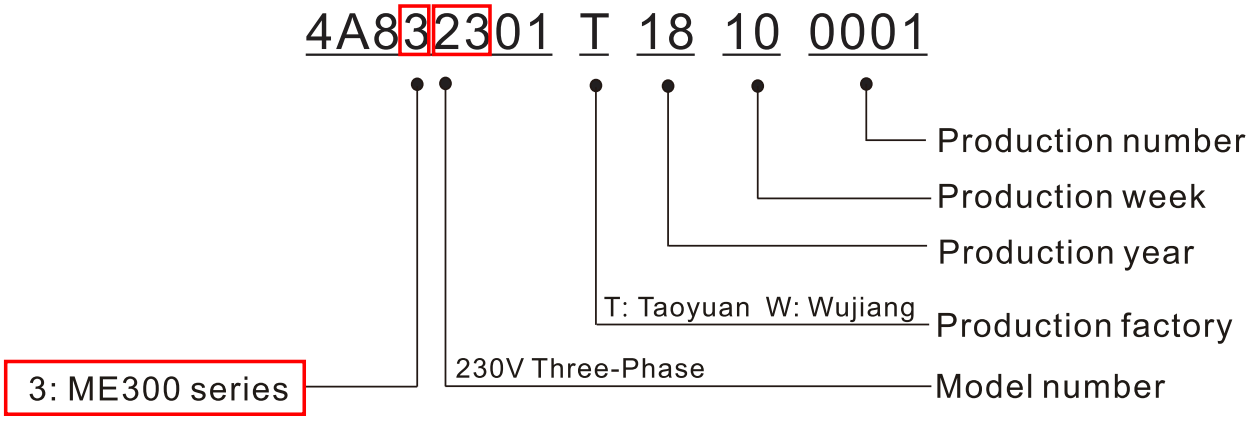

1-4 Apply After Service by Mobile Device

1-4-1 Location of Service Link Label

The service link label (Service Label) is pasted on the keypad area on the case body, as shown below.

Frame A, B

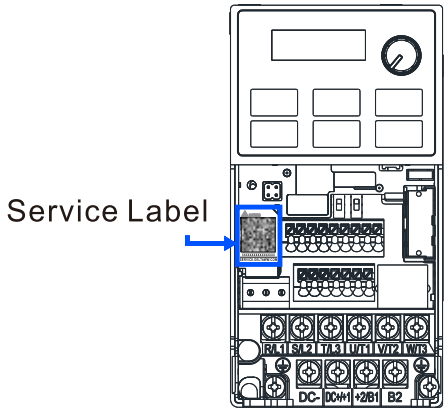

Frame C, D

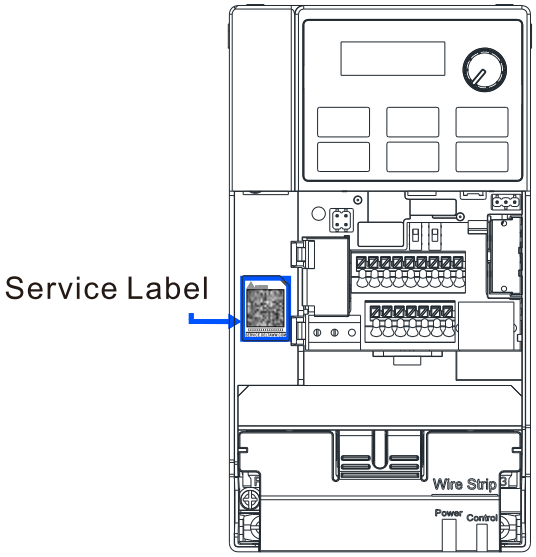

1-4-2 Service Link Label

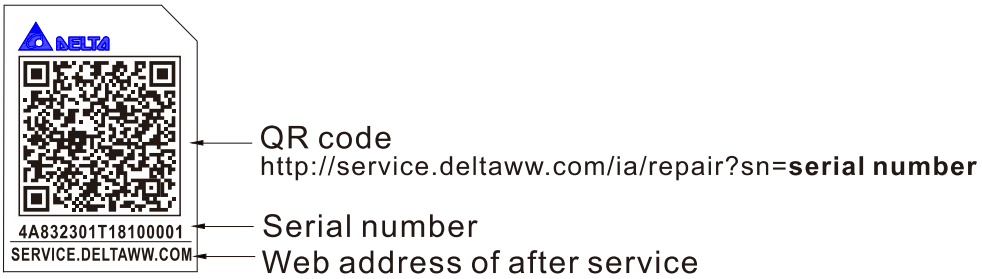

Scan QR Code to apply for service

1. Locate the QR code sticker (as shown above).
2. Use a smartphone to run a QR Code reader App.
3. Point your camera at the QR Code. Hold your camera steady so that the QR code comes into focus.
4. Access the Delta After Service website.
5. Enter your information in the column marked with an orange star.
6. Enter the CAPTCHA and click **Submit** to complete the application.

Cannot find out the QR Code?

1. Open a web browser on your computer or smartphone.
2. In the browser address bar, enter https://service.deltaww.com/ia/repair and press **Enter**.
3. Enter your information in the columns marked with an orange star.
4. Enter the CAPTCHA and click **Submit** to complete the application.

1-5 RFI Jumper

The drive contains Varistors / MOVs that are connected from phase to phase and from phase to ground to protect the drive against mains surges or voltage spikes.
Because the Varistors / MOVs from phase to ground are connected to ground with the RFI jumper, removing the RFI jumper disables the protection.

1. In models with a built-in EMC filter, the RFI jumper connects the filter capacitors to ground to form a return path for high frequency noise. This isolates the noise from contaminating the mains power. Removing the RFI jumper strongly reduces the effect of the built-in EMC filter.

2. Although a single drive complies with the international standards for leakage current, an installation with several drives with built-in EMC filters can trigger the RCD. Removing the RFI jumper can help, but the EMC performance of each drive is no longer guaranteed.

Frame A–D Screw Torque: 4–6 kg-cm / [3.5–5.2 lb-in.] / [0.39–0.59 Nm]
Loosen the screw and remove the RFI jumper (as shown below). Fasten the screw again after you remove the RFI jumper.

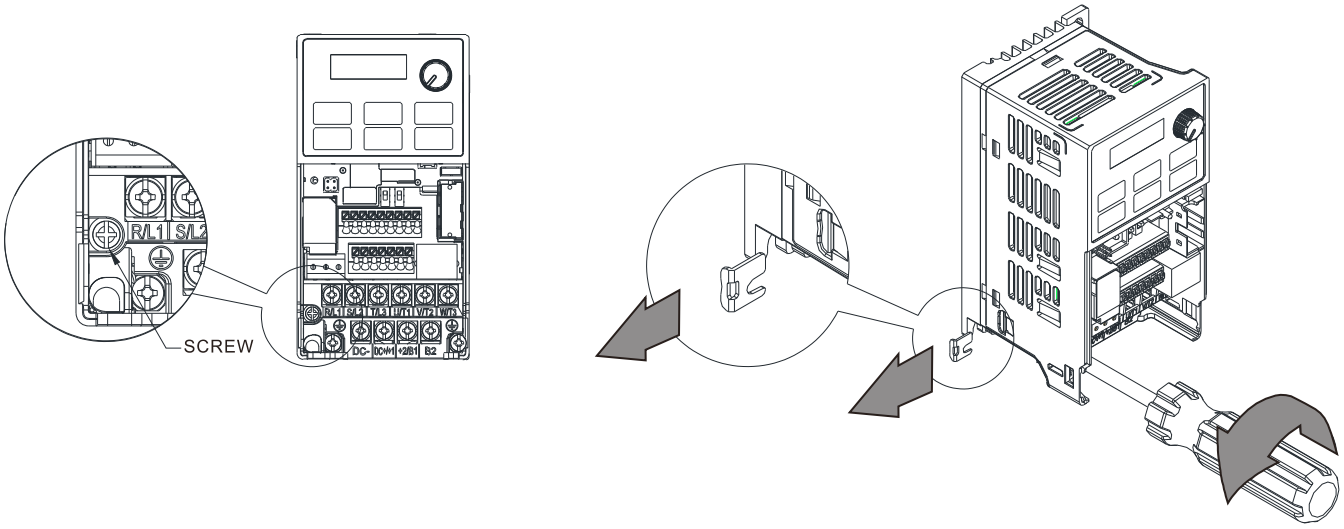

Frame B–D (model with built-in EMC filter)
Remove the RFI jumper with a screwdriver (as shown below).

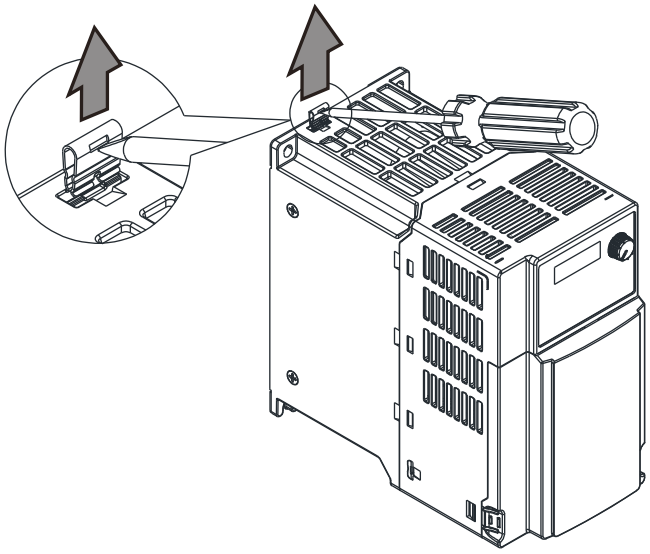

Isolating main power from ground:

When the power distribution system for the drive is a floating ground system (IT Systems) or an asymmetric ground system (Corner Grounded TN Systems), you must remove the RFI jumper. Removing the RFI jumper disconnects the internal capacitors from ground to avoid damaging the internal circuits and to reduce the ground leakage current.

Important points regarding the ground connection:

- ☑ To ensure the safety of personnel, proper operation, and to reduce electromagnetic radiation, you must properly ground the drive during installation.
- ☑ The diameter of the cables must comply with the local safety regulations.
- ☑ The shields of shielded cables must be connected to the ground of the drive to meet safety regulations.
- ☑ The shields of shielded power cables can only be used as the ground for equipment when the above points are met.
- ☑ When installing more drives, do not connect the grounds of the drives in series but connect each drive to ground. The following pictures show the correct and wrong ways to connect the grounds.

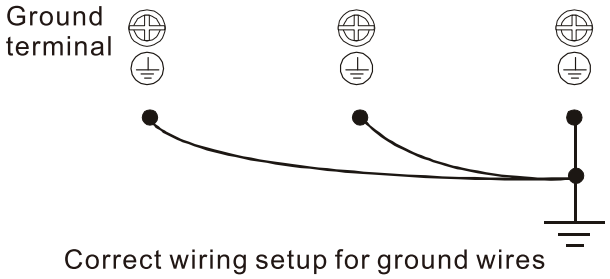

Correct wiring setup for ground wires

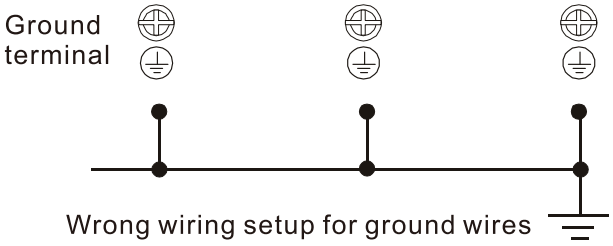

Wrong wiring setup for ground wires

Pay particular attention to the following points:

- ☑ Do not remove the RFI jumper while the power is on.
- ☑ Removing the RFI jumper also disconnects the built-in EMC filter capacitors. Compliance with the EMC specifications is no longer guaranteed.
- ☑ Do not remove the RFI jumper if the mains power is a symmetrical grounded power system in order to maintain the efficiency for EMC circuit.
- ☑ Do not remove the RFI jumper while conducting high voltage tests. When conducting a high voltage test to the entire facility, you must disconnect the mains power and the motor if the leakage current is too high.

Floating Ground System (IT Systems)

A floating ground system is also called an IT system, an ungrounded system, or a high impedance/resistance (greater than 30 Ω) grounded system.

- ☑ Disconnect the RFI jumper.
- ☑ Check whether there is excess electromagnetic radiation affecting nearby low-voltage circuits.
- ☑ In some situations, the transformer and cable naturally provide enough EM radiation suppression. If in doubt, install an extra electrostatic shielded cable on the power supply side between the main circuit and the control terminals to increase security.
- ☑ Do not install an external EMC filter. The EMC filter is connected to ground through the filter capacitors, and connects the power input to ground. This is very dangerous and can easily damage the drive.

Asymmetric Ground System (Corner Grounded TN Systems)

Caution: Do not remove the RFI jumper while there is power to the input terminal of the drive.

In the following four situations, you must remove the RFI jumper. This is to prevent the system from grounding through the RFI and filter capacitors and damaging the drive.

<table>
<tr><th colspan="2">You must remove the RFI jumper</th></tr>
<tr><td>1. Grounding at a corner in a triangle configuration
 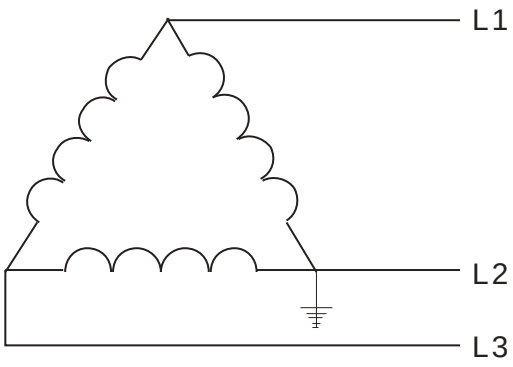
</td><td>2. Grounding at a midpoint in a polygonal configuration
 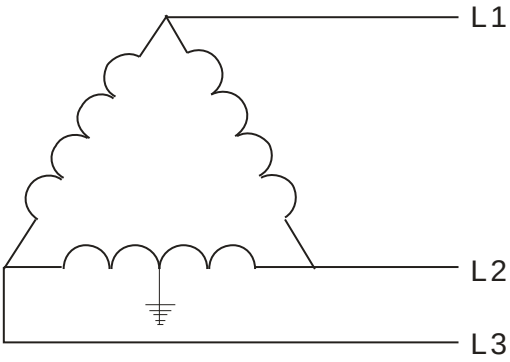
</td></tr>
<tr><td>3. Grounding at one end in a single-phase configuration
 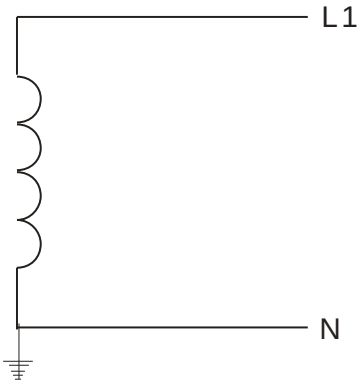
</td><td>4. No stable neutral grounding in a three-phase autotransformer configuration
 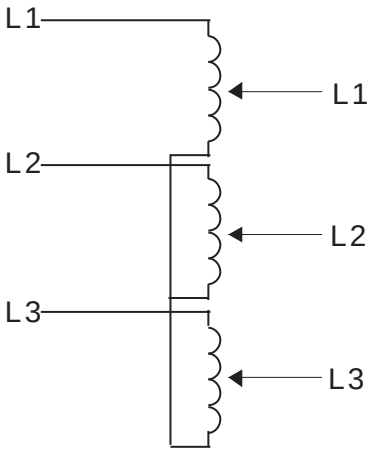
</td></tr>
<tr><th colspan="2">You can use the RFI jumper</th></tr>
<tr><td colspan="2">Internal grounding through RFI capacitors that reduce electromagnetic radiation. In a symmetrically grounding power system with higher EMC requirements, install an EMC filter. As a reference, the diagram on the right is a symmetrical grounding power system.
 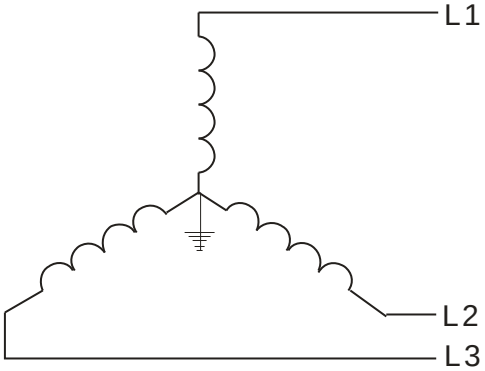
</td></tr>
</table>

[This page intentionally left blank]

Chapter 2 Dimensions

2-1 Frame A

2-2 Frame B

2-3 Frame C

2-4 Frame D

2-1 Frame A

A1: VFD0A8ME11ANNAA; VFD0A8ME11ANSAA; VFD0A8ME21ANNAA; VFD0A8ME21ANSAA; VFD0A8ME23ANNAA; VFD0A8ME23ANSAA; VFD1A6ME11ANNAA; VFD1A6ME11ANSAA; VFD1A6ME21ANNAA; VFD1A6ME21ANSAA; VFD1A6ME23ANNAA; VFD1A6ME23ANSAA

A2: VFD2A8ME23ANNAA; VFD2A8ME23ANSAA

A3: VFD2A5ME11ANNAA; VFD2A5ME11ANSAA; VFD2A8ME21ANNAA; VFD2A8ME21ANSAA

A4: VFD1A5ME43ANNAA; VFD1A5ME43ANSAA

A5: VFD4A8ME23ANNAA; VFD4A8ME23ANSAA

A6: VFD2A7ME43ANNAA; VFD2A7ME43ANSAA

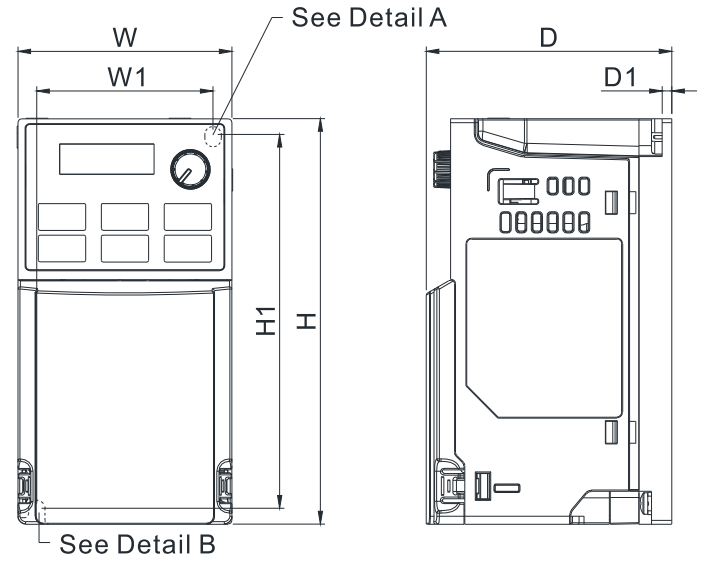

Detail A (Mounting Hole)

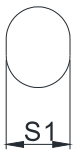

Detail B (Mounting Hole)

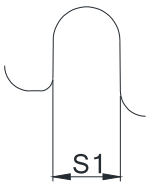

Unit: mm [inch]

Frame	W	H	D	W1	H1	D1	S1
A1	68.0 [2.68]	128.0 [5.04]	78.0 [3.07]	56.0 [2.20]	118.0 [4.65]	3.0 [0.12]	5.2 [0.20]
A2	68.0 [2.68]	128.0 [5.04]	92.0 [3.62]	56.0 [2.20]	118.0 [4.65]	3.0 [0.12]	5.2 [0.20]
A3	68.0 [2.68]	128.0 [5.04]	107.0 [4.21]	56.0 [2.20]	118.0 [4.65]	3.0 [0.12]	5.2 [0.20]
A4	68.0 [2.68]	128.0 [5.04]	113.0 [4.45]	56.0 [2.20]	118.0 [4.65]	3.0 [0.12]	5.2 [0.20]
A5	68.0 [2.68]	128.0 [5.04]	125.0 [4.92]	56.0 [2.20]	118.0 [4.65]	3.0 [0.12]	5.2 [0.20]
A6	68.0 [2.68]	128.0 [5.04]	127.0 [5.00]	56.0 [2.20]	118.0 [4.65]	3.0 [0.12]	5.2 [0.20]

2-2 Frame B

B1: VFD7A5ME23ANNAA; VFD7A5ME23ANSAA; VFD4A2ME43ANNAA; VFD4A2ME43ANSAA

B2: VFD4A8ME21ANNAA; VFD4A8ME21ANSAA

B3: VFD0A8ME21AFNAA; VFD0A8ME21AFSAA; VFD1A6ME21AFNAA; VFD1A6ME21AFSAA; VFD2A8ME21AFNAA; VFD2A8ME21AFSAA; VFD4A8ME21AFNAA; VFD4A8ME21AFSAA; VFD1A5ME43AFNAA; VFD1A5ME43AFSAA; VFD2A7ME43AFNAA; VFD2A7ME43AFSAA; VFD4A2ME43AFNAA; VFD4A2ME43AFSAA

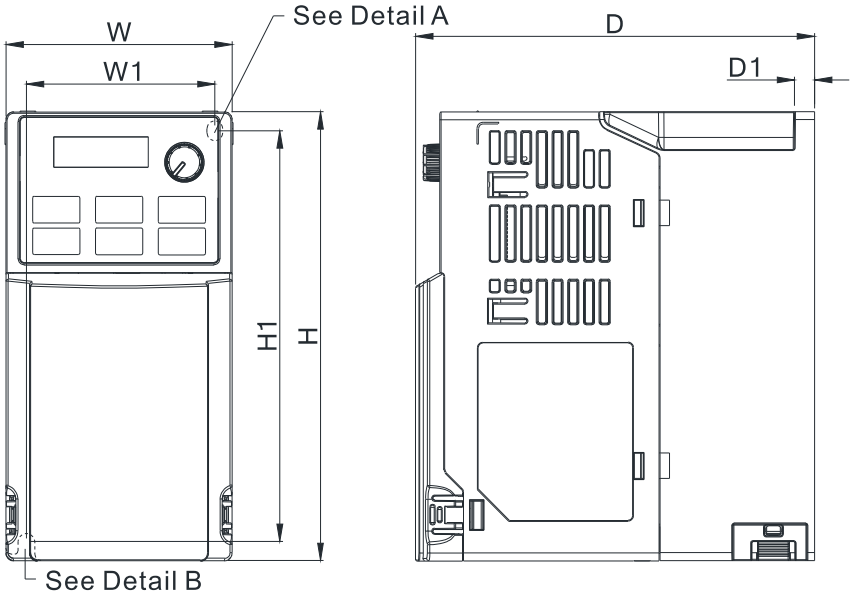

Detail A (Mounting Hole)

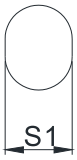

Detail B (Mounting Hole)

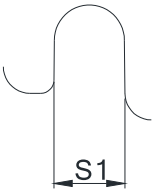

Unit: mm [inch]

Frame	W	H	D	W1	H1	D1	S1
B1	72.0 [2.83]	142.0 [5.59]	127.0 [5.00]	60.0 [2.36]	130.0 [5.12]	6.4 [0.25]	5.2 [0.20]
B2	72.0 [2.83]	142.0 [5.59]	127.0 [5.00]	60.0 [2.36]	130.0 [5.12]	3.0 [0.12]	5.2 [0.20]
B3	72.0 [2.83]	142.0 [5.59]	143.0 [5.63]	60.0 [2.36]	130.0 [5.12]	4.3 [0.17]	5.2 [0.20]

2-3 Frame C

C1: VFD4A8ME11ANNAA; VFD4A8ME11ANSAA; VFD7A5ME21ANNAA; VFD7A5ME21ANSAA; VFD11AME21ANNAA; VFD11AME21ANSAA; VFD11AME23ANNAA; VFD11AME23ANSAA; VFD17AME23ANNAA; VFD17AME23ANSAA; VFD5A5ME43ANNAA; VFD5A5ME43ANSAA; VFD7A3ME43ANNAA; VFD7A3ME43ANSAA; VFD9A0ME43ANNAA; VFD9A0ME43ANSAA

C2: VFD7A5ME21AFNAA; VFD7A5ME21AFSAA; VFD11AME21AFNAA; VFD11AME21AFSAA; VFD5A5ME43AFNAA; VFD5A5ME43AFSAA; VFD7A3ME43AFNAA; VFD7A3ME43AFSAA; VFD9A0ME43AFNAA; VFD9A0ME43AFSAA

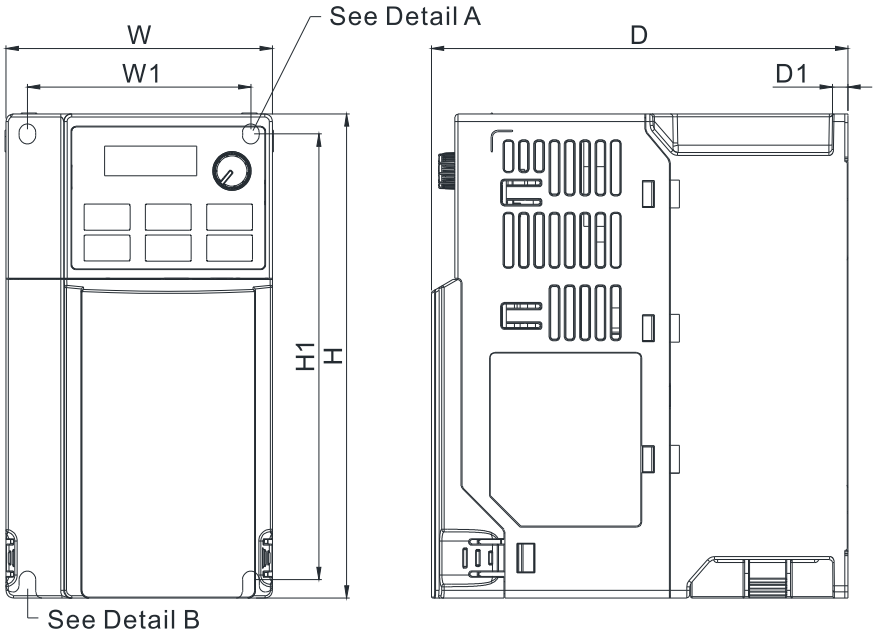

Detail A (Mounting Hole)

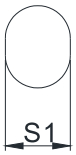

Detail B (Mounting Hole)

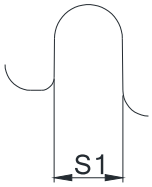

Unit: mm [inch]

Frame	W	H	D	W1	H1	D1	S1
C1	87.0 [3.43]	157.0 [6.18]	136.0 [5.35]	73.0 [2.87]	144.5 [5.69]	5.0 [0.20]	5.5 [0.22]
C2	87.0 [3.43]	157.0 [6.18]	163.0 [6.42]	73.0 [2.87]	144.5 [5.69]	5.0 [0.20]	5.5 [0.22]

2-4 Frame D

D1: VFD25AME23ANNAA; VFD25AME23ANSAA; VFD13AME43ANNAA; VFD13AME43ANSAA; VFD17AME43ANNAA; VFD17AME43ANSAA

D2: VFD13AME43AFNAA; VFD13AME43AFSAA; VFD17AME43AFNAA; VFD17AME43AFSAA

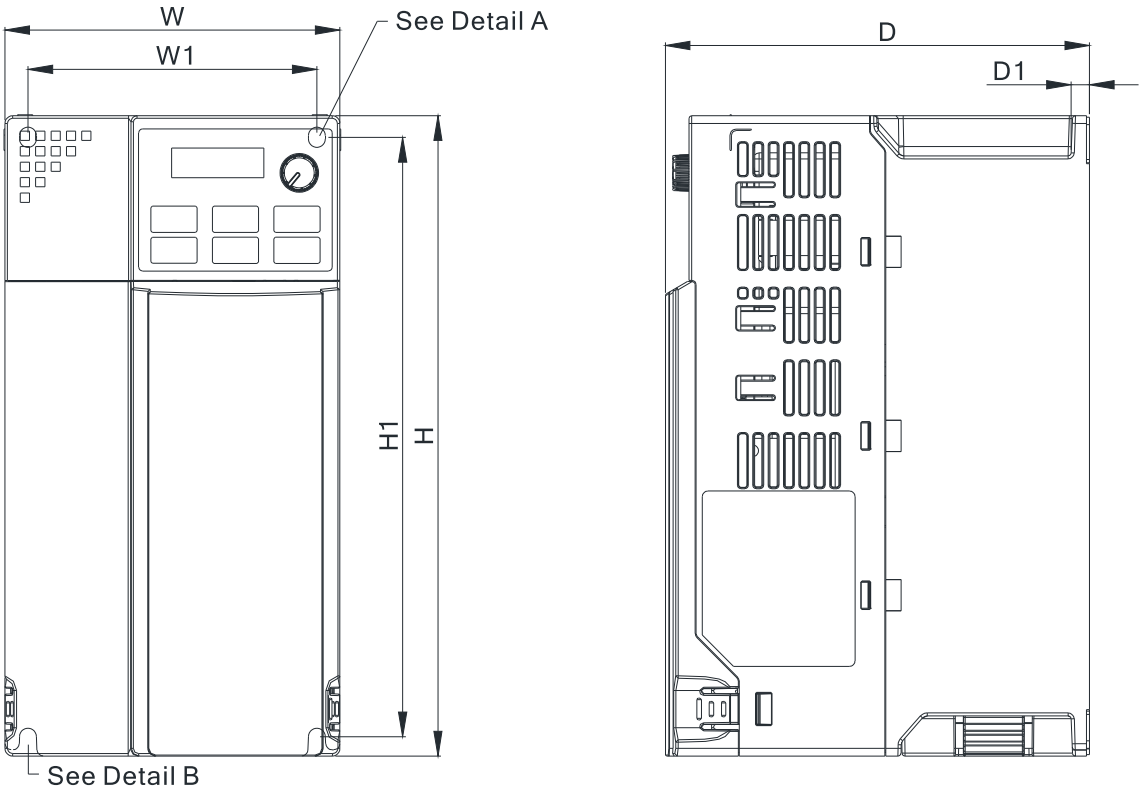

Detail A (Mounting Hole)

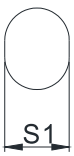

Detail B (Mounting Hole)

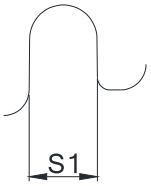

Unit: mm [inch]

Frame	W	H	D	W1	H1	D1	S1
D1	109.0 [4.29]	207.0 [8.15]	138.0 [5.43]	94.0 [3.70]	193.8 [7.63]	6.0 [0.24]	5.5 [0.22]
D2	109.0 [4.29]	207.0 [8.15]	171.0 [6.73]	94.0 [3.70]	193.8 [7.63]	6.0 [0.24]	5.5 [0.22]

[This page intentionally left blank]

Chapter 3 Installation

3-1 Mounting Clearance

3-2 Airflow and Power Dissipation

3-1 Mounting Clearance

- ☑ Prevent fiber particles, scraps of paper, shredded wood, sawdust, metal particles, etc. from adhering to the heat sink.
- ☑ Install the AC motor drive in a metal cabinet. When installing one drive below another one, use a metal separator between the AC motor drives to prevent mutual heating and to prevent the risk of accidental fire.
- ☑ Install the AC motor drive in a Pollution Degree 2 environment with clean and circulating air. A clean and circulating environment means air without polluting substances and dust.
- ☑ Mount the drive in an IP54 cabinet in order to maintain the Pollution Degree 2 or in a pollution-controlled environment. When installing the AC motor drive in a Pollution Degree 2 (IEC/EN 60664-1) environment, only nonconductive pollution occurs for the electrical equipment in the cabinet and thermostatic chamber and temporary conductivity caused by condensation is expected.

The appearances shown in the following figures are for reference only. The actual motor drives may look different.

Airflow direction: (Blue arrow) Inflow (Red arrow) Outflow (Black) Distance

Single drive installation

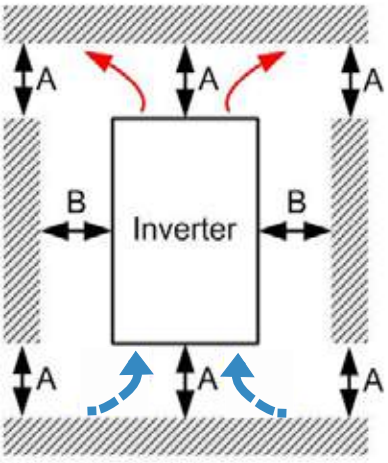

Figure 3-1

Side-by-side horizontal installation / Zero stack installation

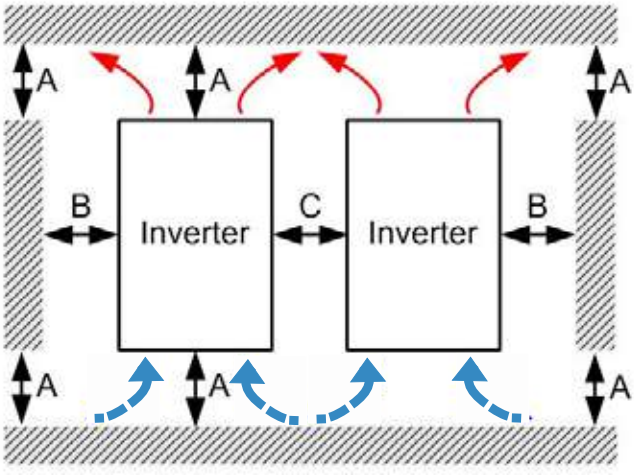

Figure 3-2

Minimum Mounting Clearance

Installation method	A [mm]	B [mm]	C [mm]	Max. Ambient temperature (°C)	
				Without derating	derating
Single drive installation	50	30	-	50	60
Side-by-side horizontal installation	50	30	30	50	60
Zero stack installation	50	30	0	40	50

Table 3-1

NOTE：

The minimum mounting clearances A–C stated in the table above apply to AC motor drives installation. Failing to follow the minimum mounting clearances may cause the fan to malfunction and heat dissipation problems.

Ambient Temperature Derating for Each Installation Method

- Single drive installation

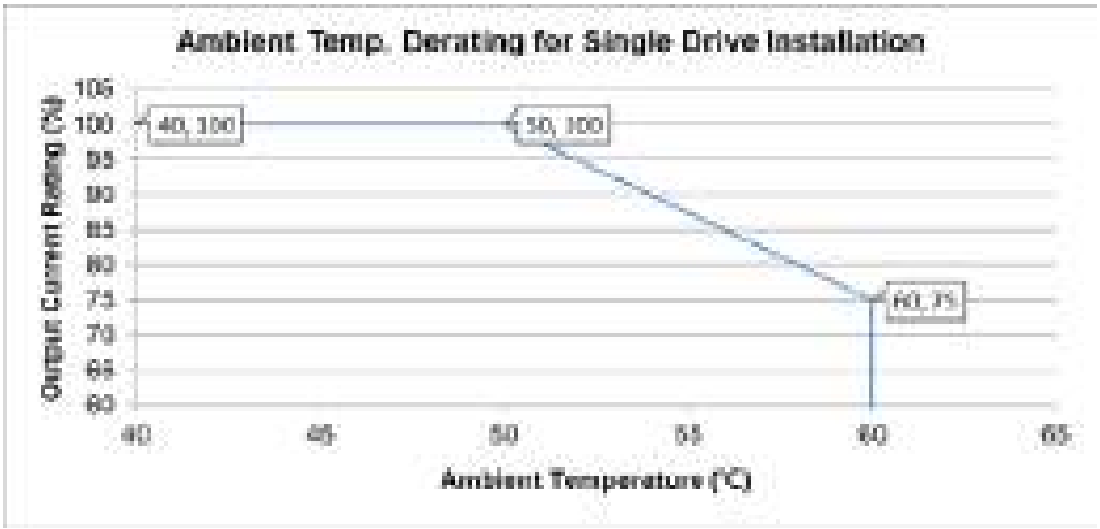

Figure 3-3

- Side-by-side horizontal installation

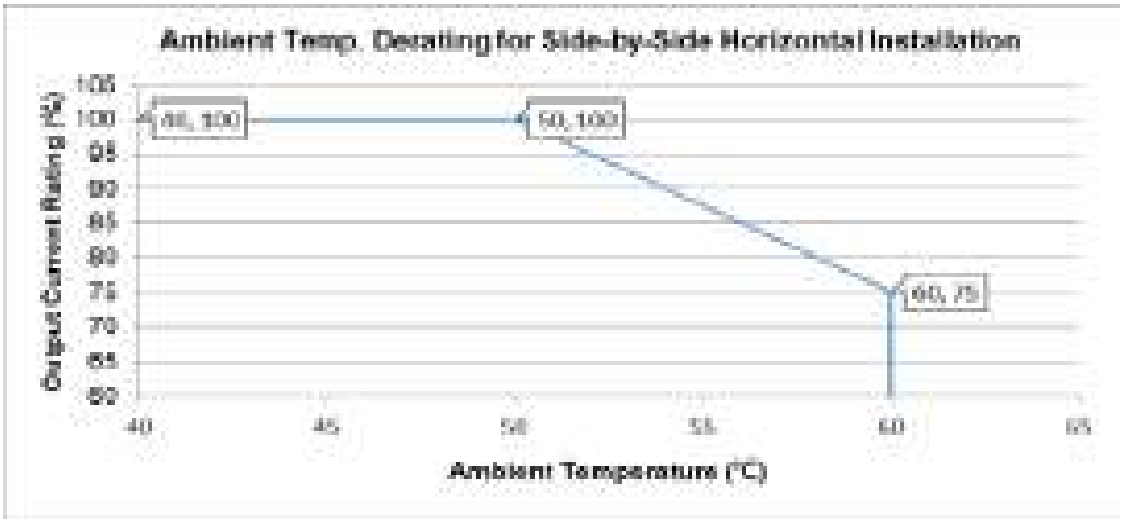

Figure 3-4

- Zero stack installation

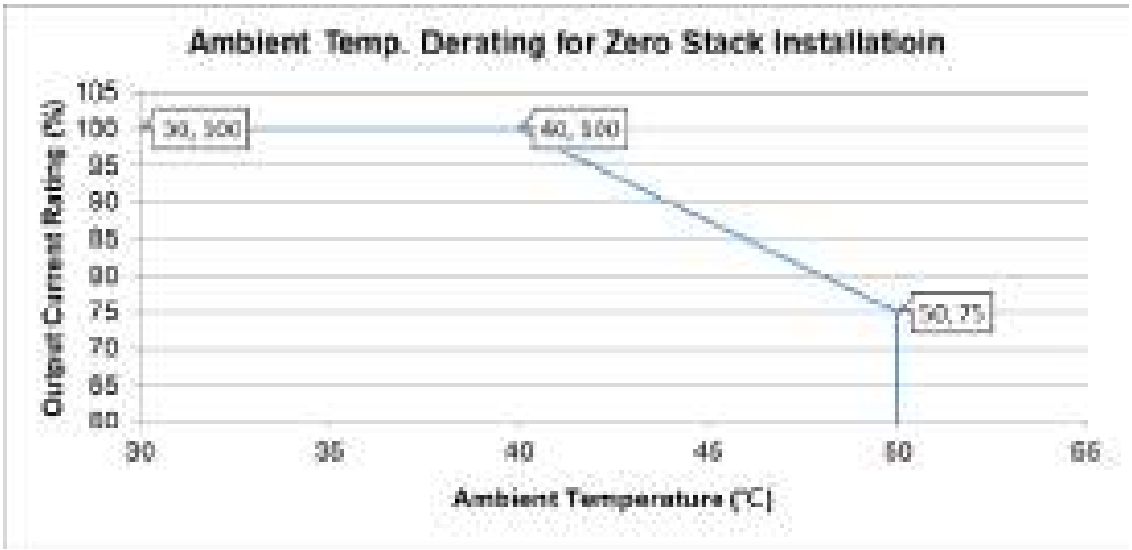

Figure 3-5

3-2 Airflow and Power Dissipation

Frame	Airflow Rate for Cooling			Power Dissipation for AC Motor Drive		
	Model No.	Flow Rate (Unit: cfm)	Flow Rate (Unit: m^3/hr)	Loss External (Heat sink, unit: W)	Internal (Unit: W)	Total (Unit: W)
A	VFD2A5ME11ANNAA VFD2A5ME11ANSAA	0	0	14.2	13.1	27.3
	VFD2A8ME21ANNAA VFD2A8ME21ANSAA			16.3	14.5	30.8
	VFD4A8ME23ANNAA VFD4A8ME23ANSAA			31	13.2	44.2
	VFD1A5ME43ANNAA VFD1A5ME43ANSAA			17.6	11.1	28.7
	VFD2A7ME43ANNAA VFD2A7ME43ANSAA			30.5	17.8	48.3
	VFD0A8ME11ANNAA VFD0A8ME11ANSAA			5.1	6.8	11.9
	VFD1A6ME11ANNAA VFD1A6ME11ANSAA			8	10	18
	VFD0A8ME21ANNAA VFD0A8ME21ANSAA			5.1	6.8	11.9
	VFD1A6ME21ANNAA VFD1A6ME21ANSAA			8	10.3	18.3
	VFD0A8ME23ANNAA VFD0A8ME23ANSAA			5.1	6.8	11.9
	VFD1A6ME23ANNAA VFD1A6ME23ANSAA			8.6	10	18.6
	VFD2A8ME23ANNAA VFD2A8ME23ANSAA			16.5	12.6	29.1
B	VFD0A8ME21AFNAA VFD0A8ME21AFSAA	0	0	5.1	6.8	11.9
	VFD1A6ME21AFNAA VFD1A6ME21AFSAA			8	10.3	18.3
	VFD2A8ME21AFNAA VFD2A8ME21AFSAA	10	16.99	16.3	14.5	30.8
	VFD4A8ME21AFNAA VFD4A8ME21AFSAA			29.1	20.1	49.2
	VFD4A8ME21ANNAA VFD4A8ME21ANSAA	0	0	29.1	20.1	49.2
	VFD7A5ME23ANNAA VFD7A5ME23ANSAA	10	16.99	50.1	24.2	74.3
	VFD4A2ME43ANNAA VFD4A2ME43AFNAA VFD4A2ME43ANSAA VFD4A2ME43AFSAA			45.9	21.7	67.6
	VFD1A5ME43AFNAA VFD1A5ME43AFSAA			17.6	11.1	28.7
	VFD2A7ME43AFNAA VFD2A7ME43AFSAA			30.5	17.8	48.3

Frame	Airflow Rate for Cooling			Power Dissipation for AC Motor Drive		
	Model No.	Flow Rate (Unit: cfm)	Flow Rate (Unit: m^3/hr)	Loss External (Heat sink, unit: W)	Internal (Unit: W)	Total (Unit: W)
C	VFD4A8ME11ANNAA VFD4A8ME11ANSAA	16	27.2	29.1	23.9	53
	VFD7A5ME21ANNAA VFD7A5ME21AFNAA			46.5	31	77.5
	VFD7A5ME21ANSAA VFD7A5ME21AFSAA			46.5	31	77.5
	VFD11AME21ANNAA VFD11AME21AFNAA VFD11AME21ANSAA VFD11AME21AFSAA			70	35	105
	VFD11AME23ANNAA VFD11AME23ANSAA			76	30.7	106.7
	VFD17AME23ANNAA VFD17AME23ANSAA			108.2	40.1	148.3
	VFD5A5ME43ANNAA VFD5A5ME43AFNAA VFD5A5ME43ANSAA VFD5A5ME43AFSAA			60.6	22.8	83.4
	VFD7A3ME43ANNAA VFD7A3ME43AFNAA VFD7A3ME43ANSAA VFD7A3ME43AFSAA			75.2	30	105.2
	VFD9A0ME43ANNAA VFD9A0ME43AFNAA VFD9A0ME43ANSAA VFD9A0ME43AFSAA			93.1	42	135.1
D	VFD25AME23ANNAA VFD25AME23ANSAA	23.4	39.7	192.8	53.3	246.1
	VFD13AME43ANNAA VFD13AME43AFNAA VFD13AME43ANSAA VFD13AME43AFSAA			132.8	39.5	172.3
	VFD17AME43ANNAA VFD17AME43AFNAA VFD17AME43ANSAA VFD17AME43AFSAA			164.7	55.8	220.5

Table 3-2

[This page intentionally left blank]

Chapter 4 Wiring

4-1 System Wiring Diagram

4-2 Wiring

After you remove the front cover, verify that the power and control terminals are clearly visible. Read the following precautions to avoid wiring mistakes.

- ☑ It is crucial to **turn off the AC motor drive power** before you make any wiring. A charge with hazardous voltages may still remain in the DC BUS capacitors even if the power is off for a short time. Measure the remaining voltage with a DC voltmeter on +1/DC+ and DC- before wiring. For your safety, do not start any wiring before the voltage drops to a safe level (less than 25 V_{DC}). Installing wiring with a residual voltage may cause injuries, sparks and short circuits.
- ☑ Only qualified personnel familiar with AC motor drives are allowed to perform installation, wiring and commissioning. Make sure the power is turned off before wiring to prevent electric shock.
- ☑ The terminals R/L1, S/L2, and T/L3 are for mains power input. If mains power is incorrectly connected to other terminals, it may result in damage to the equipment. The voltage and current must be in the range indicated on the nameplate (see Section 1-1).
- ☑ All units must be grounded directly to a common ground terminal to prevent electrical shock or damage from lightning.
- ☑ Tighten the screw of the main circuit terminals to prevent sparks due to loosening of the terminals resulted from vibration.

- ☑ When wiring, choose wires that comply with local regulations for your safety.
- ☑ Check the following items after you finish the wiring:
  1. Are all connections correct?
  2. Are there any loose wires?
  3. Are there any short circuits between the terminals or to ground?

4-1 System Wiring Diagram

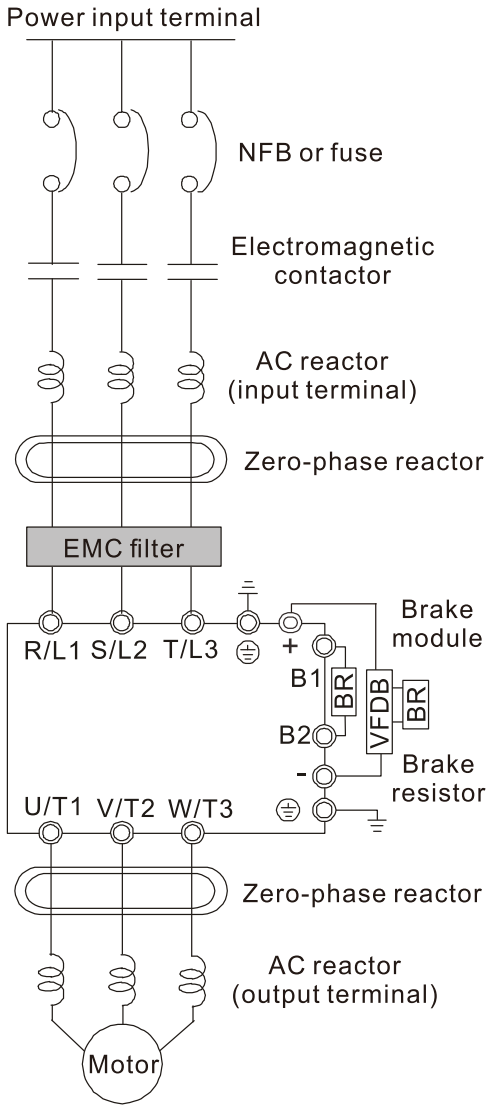

Figure 4-1

Power input terminal	Please refer to Chapter 9 Specification Table in the user manual for details.
NFB or fuse	There may be a large inrush current during power on. Refer to Section 7-2 Magnetic Contactor / Air Circuit Breaker and Non-fuse Circuit Breaker to select a suitable NFB or Section 7-3 Fuse Specification Chart.
Electromagnetic contactor	Switching the power ON/OFF before the magnetic contactor more than once per hour can damage the drive.
AC reactor (input terminal)	When the mains power capacity is > 500 kVA or when the drive is preceded by a capacitor bank, the instantaneous peak voltage and current may destroy the drive. In that case it is recommended to install an AC input reactor that also improves the power factor and harmonics. The cable between reactor and drive should be < 10m. Please refer to Section 7-4 AC/DC Reactor.
Zero-phase reactor	Can be used to reduce radiated emission, especially in environments with audio devices, and reduce input and output side interference. The effective range is AM band to 10 MHz. Please refer to Section 7-5 Zero Phase Reactors.
EMC filter	Can be used to reduce electromagnetic interference. Please refer to Section 7-6 EMC Filter.
Brake module & Brake resistor (BR)	Can be used to shorten the deceleration time of the motor. Please refer to Section 7-1 Brake Resistors and Brake Units Used in AC Motor Drives.
AC reactor (output terminal)	The wiring length of the motor affects switching current peaks. It is recommended to install an AC output reactor when the motor wiring length exceeds the value listed in Section 7-4 AC/DC Reactor.

Table 4-1

4-2 Wiring

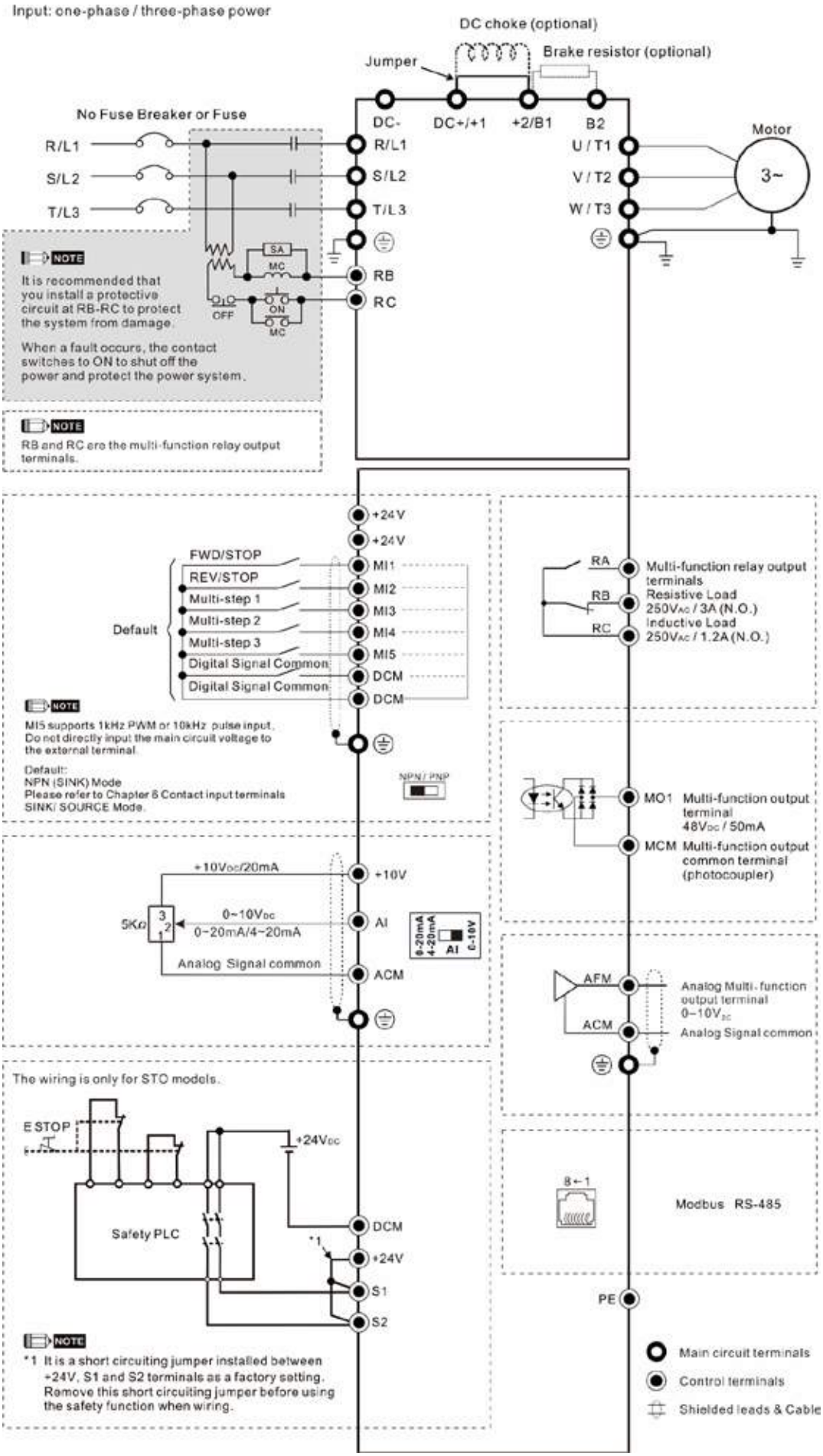

Figure 4-2

Chapter 5 Main Circuit Terminals

5-1 Main Circuit Diagram

5-2 Main Circuit Terminals

DANGER

- ☑ Securely fasten the main circuit terminal screws to prevent sparking caused by loose screws due to vibration.
- ☑ If necessary, use an inductive filter only at the motor output terminals U/T1, V/T2, W/T3 of the AC motor drive. DO NOT use phase-compensation capacitors or L-C (Inductance-Capacitance) or R-C (Resistance-Capacitance), unless approved by Delta.
- ☑ DO NOT connect brake resistors directly to +1/DC+ to DC-, +2/B1 to DC- to prevent damage to the drive.
- ☑ Ensure proper insulation of the main circuit wiring in accordance with the relevant safety regulations.

CAUTION

Main power terminals

- ☑ R/L1, S/L2 and T/L3 have no phase-sequence requirement; they can be connected in any sequence.
- ☑ Add a magnetic contactor (MC) at the power input to quickly cut off power and reduce malfunction when activating the AC motor drive protection function. Both ends of the MC should have an R-C surge absorber.
- ☑ Ensure that voltages and currents are within specification. Refer to Chapter 09 Specifications for details.
- ☑ When using a general GFCI (Ground Fault Circuit Interrupter), use a current sensor with sensitivity of 200 mA or above and not less than 0.1 second operation time to avoid nuisance tripping.
- ☑ Use conduits or shielded cables for the power wiring, and ground both ends of the conduit or shielded cables.
- ☑ DO NOT start or stop the drive by turning the power ON or OFF. Start and stop the drive with the RUN/STOP command from the control terminals or keypad. If you still need to run or stop the drive by turning the power ON or OFF, it is strongly recommended that you do so no more often than ONCE per hour.
- ☑ To comply with UL standards, connect the drive to a three-phase three-wire or three-phase four-wire Wye system type of mains power system.

Output terminals for main circuit

- ☑ Use a well-insulated motor that is suitable for operation with an inverter.
- ☑ When the AC drive output terminals U/T1, V/T2, and W/T3 are connected to the motor terminals U/T1, V/T2, and W/T3 respectively, the motor rotates counterclockwise (as viewed from the shaft end of the motor) when it receives a forward operation command. To permanently reverse the direction of rotation, exchange any two motor leads.

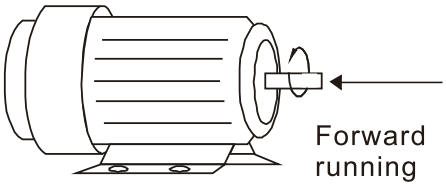

Figure 5-1

Terminals for connecting DC reactor, external brake resistor and DC circuit

☑ Terminals for connecting the DC reactor, as shown in Figure 5-2 below, are to improve the power factor and harmonics. At delivery they are shorted by a jumper. Remove the jumper before connecting the DC reactor.

☑ You must tightly fasten the jumper when it does not connect the DC reactor, use DC+/+1, +2/B1 to execute common DC BUS, or connect with a brake resistor; otherwise, the drive might lose power or break the terminals.

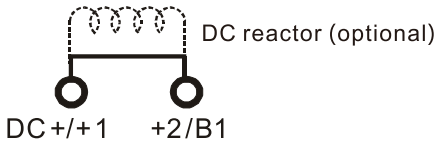

Figure 5-2

☑ Connect a brake resistor in applications with frequent deceleration, short deceleration time, too low braking torque, or increased braking torque.

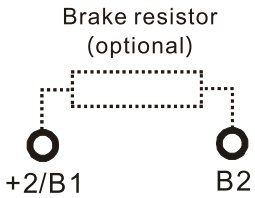

Figure 5-3

☑ Connect the external brake resistor to the terminals [+2/B1], [B2] on AC motor drives.

☑ DO NOT short-circuit or connect a brake resistor directly to DC+/+1 and DC-, +2/B1 to DC-; otherwise, the drive will be damaged.

☑ Connect DC+ and DC- in common DC BUS applications. Refer to Section 5-2 (Main Circuit Terminals) for the wiring terminal specification and the wire gauge information.

Open the front cover

🕮 Open the front cover before connecting the main circuit terminals and control circuit terminals. Open the cover according to the figure below.

🕮 The figure below shows the Frame A model for example. Opening the cover on other frame sizes is similar.

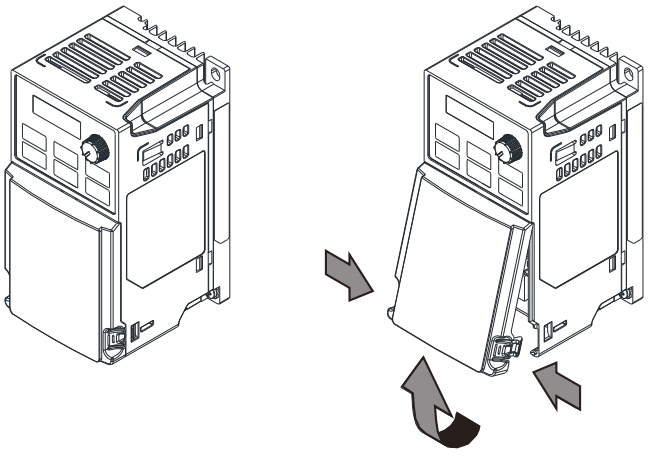

Press the clip on both sides, and take out by rotating.

Figure 5-4

5-1 Main Circuit Diagram

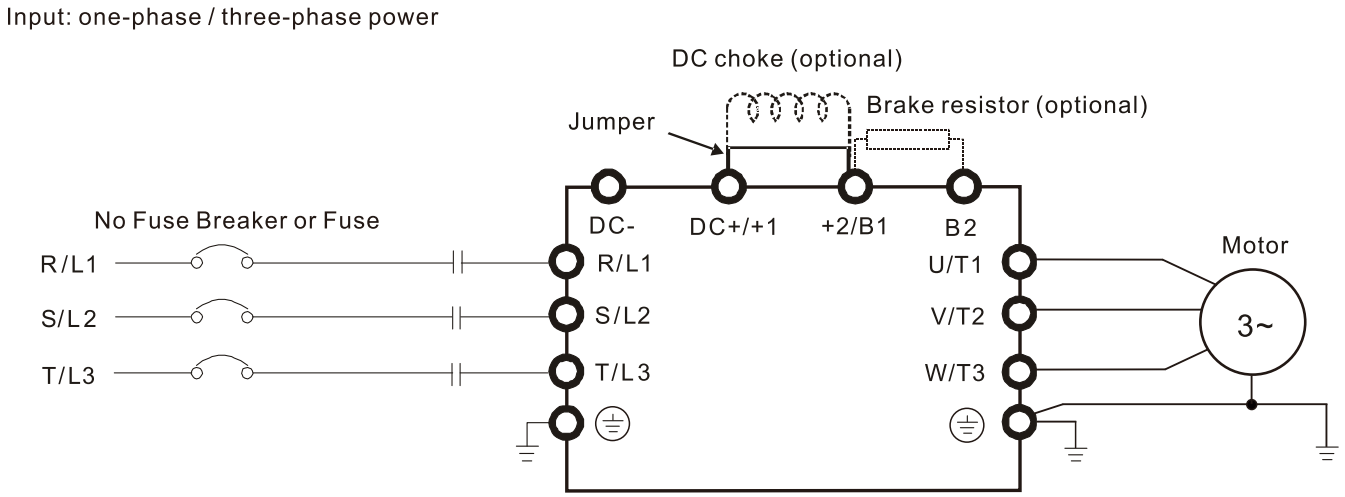

Figure 5-5

Terminals	Descriptions
R/L1, S/L2	Mains input terminals one-phase
R/L1, S/L2, T/L3	Mains input terminals three-phase
U/T1, V/T2, W/T3	Motor output terminals for connecting three-phase IM and PM motors
+1, +2	Connections for DC reactor to improve the power factor and harmonics. Remove the jumper when using a DC reactor.
DC+, DC-	Connections for brake unit (VFDB series) Common DC BUS
B1, B2	Connections for brake resistor (optional). Refer to Section 7-1 for details.
⏚	Ground connection; comply with local regulations.

Table 5-1

5-2 Main Circuit Terminals

- Use the specified ring lug for main circuit terminal wiring. See Figure 1. for ring lug specifications. For other types of wiring, use the wires that comply with the local regulations.
- After crimping the wire to the ring lug (must be UL approved), UL and CSA approved R/C (YDPU2), install heat shrink tubing rated at a minimum of 600 V_{AC} insulation over the live part. Refer to Figure 2 below.
- Main circuit terminals:
  R/L1, S/L2, T/L3, U/T1, V/T2, W/T3, ⏚, DC-, DC+/+1, +2/B1, B2
  Note: One-phase model with no T/L3 terminal.

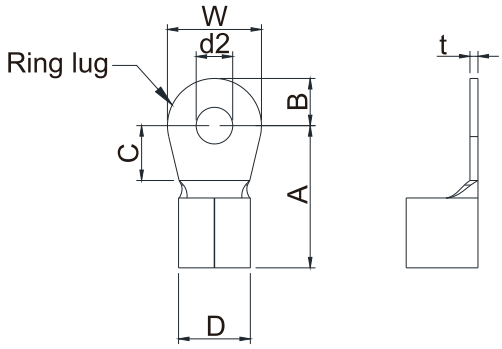

Figure 5-6

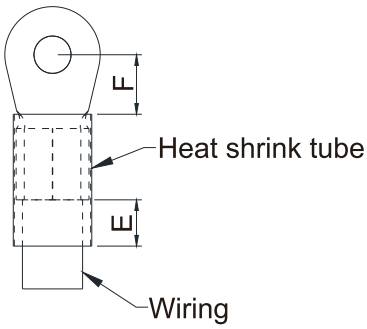

Figure 5-7

Dimensions of Ring Lug

The part # of the ring terminals (produced by K.S. Terminals) in the table below are for reference only. You can buy other ring terminals of your choice to match with different frame sizes.

Unit: mm

Frame	AWG	Kit P/N	A (MAX)	B (MAX)	C (MIN)	D (MAX)	d2 (MIN)	E (MIN)	F (MIN)	W (MAX)	t (MAX)
A	18	RNBS1-3.7	9.8	3.2	4.8	4.1	3.7	13.0	4.2	6.6	0.8
	16	RNBS2-3.7									
	14	RNBS2-3.7									
B	18	RNBS1-4	12.1	3.6	6.1	5.6	4.3	13.0	4.5	7.2	1.0
	16	RNBS1-4									
	14	RNBS2-4									
	12	RNBS5-4									
C	14	RNBS2-4	17.8	5.0	6.1	7.2	4.3	13.0	5.5	10.5	1.2
	12	RNBS5-4									
	10	RNBS5-4									
	8	RNBS8-4									
D	10	RNBS5-4	17.8	5.0	6.1	7.2	4.3	13.0	5.5	10.5	1.2
	8	RNBS8-4									

Table 5-2

NOTE: Refer to the table below for the wire gauge (AWG) for models in each frame.

Frame A

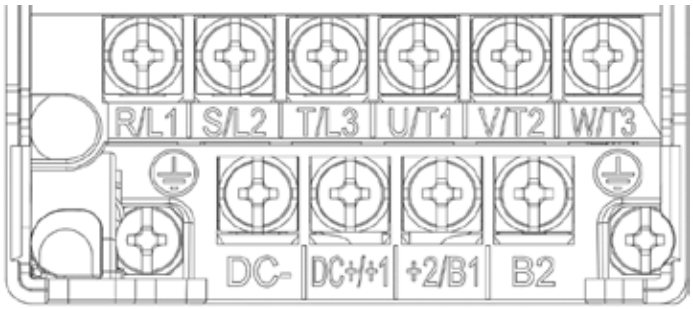

Figure 5-8

- If you install at Ta 50°C above environment, use copper wires that have a voltage rating of 600V and are temperature resistant to 90°C or above.
- If you install at Ta 50°C environment, use copper wires that have a voltage rating of 600V and are temperature resistant to 75°C or 90°C.
- For VFD2A5ME11ANNAA, VFD2A5ME11ANSAA:
  If you install at Ta 40°C above environment, use copper wires that have a voltage rating of 600V and are temperature resistant to 90°C or above.
- To be UL installation compliant, you must use copper wires when installing. The wire gauge is based on a temperature resistance of 75°C, in accordance with UL requirements and recommendations. Do not reduce the wire gauge when using high-temperature resistant wires.

Models	Main Circuit Terminals R/L1, S/L2, T/L3, U/T1, V/T2, W/T3, DC-, DC+/+1, +2/B1, B2			Terminals ⏚		
	Max. Wire Gauge	Min. Wire Gauge	Screw & Torque (±10%)	Max. Wire Gauge	Min. Wire Gauge	Screw & Torque (±10%)
VFD0A8ME11ANNAA VFD0A8ME11ANSAA	2.5mm² [14AWG]	0.75 mm² [18 AWG]	M3.5 9 kg-cm [7.8 lb-in.] [0.88 Nm]	2.5 mm² [14 AWG]	2.5 mm² [14 AWG]	M3.5 9 kg-cm [7.8 lb-in.] [0.88 Nm]
VFD1A6ME11ANNAA VFD1A6ME11ANSAA		2.5 mm² [14 AWG]				
VFD2A5ME11ANNAA VFD2A5ME11ANSAA						
VFD0A8ME21ANNAA VFD0A8ME21ANSAA		0.75 mm² [18 AWG]				
VFD1A6ME21ANNAA VFD1A6ME21ANSAA		1.5 mm² [16 AWG]				
VFD2A8ME21ANNAA VFD2A8ME21ANSAA		2.5 mm² [14 AWG]				
VFD0A8ME23ANNAA VFD0A8ME23ANSAA		0.75 mm² [18 AWG]				
VFD1A6ME23ANNAA VFD1A6ME23ANSAA						
VFD2A8ME23ANNAA VFD2A8ME23ANSAA						
VFD4A8ME23ANNAA VFD4A8ME23ANSAA		1.5 mm² [16 AWG]				
VFD1A5ME43ANNAA VFD1A5ME43ANSAA		0.75 mm² [18 AWG]				
VFD2A7ME43ANNAA VFD2A7ME43ANSAA						

Table 5-3

Frame B

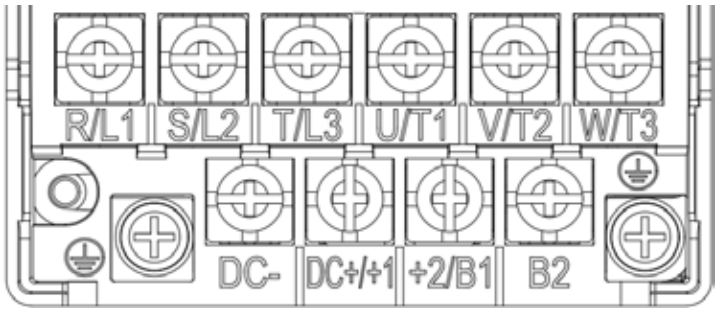

Figure 5-9

- If you install at Ta 50°C above environment, use copper wires that have a voltage rating of 600V and are temperature resistant to 90°C or above.
- If you install at Ta 50°C environment, use copper wires that have a voltage rating of 600V and are temperature resistant to 75°C or 90°C.
- To be UL installation compliant, you must use copper wires when installing. The wire gauge is based on a temperature resistance of 75°C, in accordance with UL requirements and recommendations. Do not reduce the wire gauge when using high-temperature resistant wires.

Models	Main Circuit Terminals R/L1, S/L2, T/L3, U/T1, V/T2, W/T3, DC-, DC+/+1, +2/B1, B2			Terminals ⏚		
	Max. Wire Gauge	Min. Wire Gauge	Screw & Torque (±10%)	Max. Wire Gauge	Min. Wire Gauge	Screw & Torque (±10%)
VFD0A8ME21AFNAA VFD0A8ME21AFSAA	4 mm² [12 AWG]	0.75mm² [18AWG]	M4 15 Kg-cm [13.0 lb-in.] [1.47 Nm]	2.5mm² [14 AWG]	2.5mm² [14 AWG]	M4 15 Kg-cm [13.0 lb-in.] [1.47 Nm]
VFD1A6ME21AFNAA VFD1A6ME21AFSAA		1.5mm² [16AWG]				
VFD2A8ME21AFNAA VFD2A8ME21AFSAA		2.5mm² [14 AWG]"				
VFD4A8ME21ANNAA VFD4A8ME21AFNAA VFD4A8ME21ANSAA VFD4A8ME21AFSAA		4 mm² [12 AWG]		4 mm² [12 AWG]	4 mm² [12 AWG]	
VFD7A5ME23ANNAA VFD7A5ME23ANSAA						
VFD1A5ME43AFNAA VFD1A5ME43AFSAA		0.75mm² [18AWG]		2.5mm² [14 AWG]	2.5mm² [14 AWG]	
VFD2A7ME43AFNAA VFD2A7ME43AFSAA						
VFD4A2ME43ANNAA VFD4A2ME43AFNAA VFD4A2ME43ANSAA VFD4A2ME43AFSAA		2.5mm² [14 AWG]				

Table 5-4

Frame C

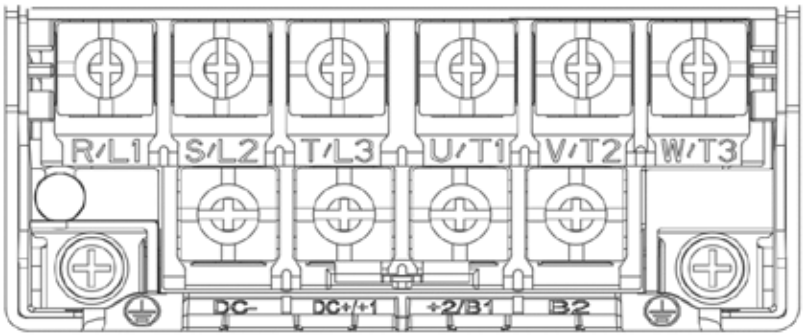

Figure 5-10

- If you install at Ta 50°C above environment, use copper wires that have a voltage rating of 600V and are temperature resistant to 90°C or above.
- If you install at Ta 50°C environment, use copper wires that have a voltage rating of 600V and are temperature resistant to 75°C or 90°C.
- To be UL installation compliant, you must use copper wires when installing. The wire gauge is based on a temperature resistance of 75°C, in accordance with UL requirements and recommendations. Do not reduce the wire gauge when using high-temperature resistant wires.

Models	Main Circuit Terminals R/L1, S/L2, T/L3, U/T1, V/T2, W/T3, DC-, DC+/+1, +2/B1, B2			Terminals ⏚		
	Max. Wire Gauge	Min. Wire Gauge	Screw & Torque (±10%)	Max. Wire Gauge	Min. Wire Gauge	Screw & Torque (±10%)
VFD4A8ME11ANNAA VFD4A8ME11ANSAA	10 mm² [8 AWG]	10 mm² [8 AWG]	M4 20 Kg-cm [17.4 lb-in.] [1.96 Nm]	10 mm² [8 AWG]	10 mm² [8 AWG]	M4 20 Kg-cm [17.4 lb-in.] [1.96 Nm]
VFD7A5ME21ANNAA VFD7A5ME21AFNAA VFD7A5ME21ANSAA VFD7A5ME21AFSAA						
VFD11AME21ANNAA VFD11AME21AFNAA VFD11AME21ANSAA VFD11AME21AFSAA						
VFD11AME23ANNAA VFD11AME23ANSAA		6 mm² [10 AWG]		6 mm² [10 AWG]	6 mm² [10 AWG]	
VFD17AME23ANNAA VFD17AME23ANSAA		10 mm² [8 AWG]		10 mm² [8 AWG]	10 mm² [8 AWG]	
VFD5A5ME43ANNAA VFD5A5ME43AFNAA VFD5A5ME43ANSAA VFD5A5ME43AFSAA		2.5 mm² [14 AWG]		2.5 mm² [14 AWG]	2.5 mm² [14 AWG]	
VFD7A3ME43ANNAA VFD7A3ME43AFNAA VFD7A3ME43ANSAA VFD7A3ME43AFSAA						
VFD9A0ME43ANNAA VFD9A0ME43AFNAA VFD9A0ME43ANSAA VFD9A0ME43AFSAA		4 mm² [12 AWG]		4 mm² [12 AWG]	4 mm² [12 AWG]	

Table 5-5

Frame D

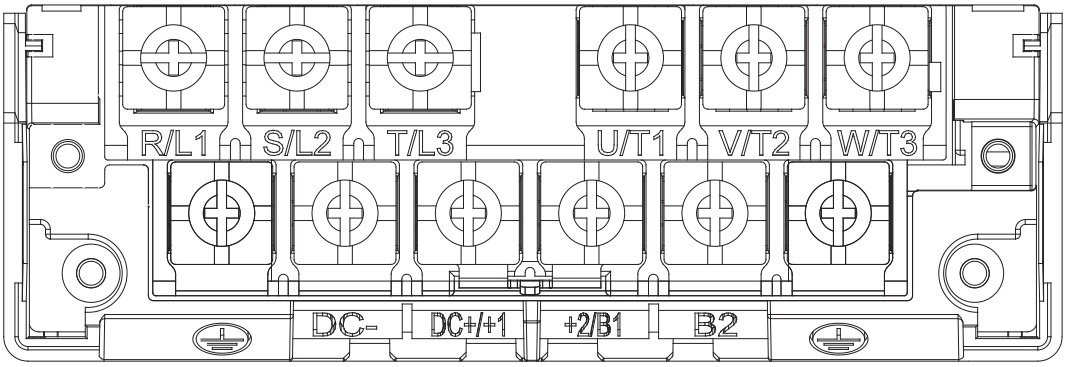

Figure 5-11

- If you install at Ta 50°C above environment, use copper wires that have a voltage rating of 600V and are temperature resistant to 90°C or above.
- If you install at Ta 50°C environment, use copper wires that have a voltage rating of 600V and are temperature resistant to 75°C or 90°C.
- For VFD25AME23ANNAA, VFD25AME23ANSAA:
  If you install at Ta 45°C above environment, use copper wires that have a voltage rating of 600V and are temperature resistant to 90°C or above.
- To be UL installation compliant, you must use copper wires when installing. The wire gauge is based on a temperature resistance of 75°C, in accordance with UL requirements and recommendations. Do not reduce the wire gauge when using high-temperature resistant wires.

Models	Main Circuit Terminals R/L1, S/L2, T/L3, U/T1, V/T2, W/T3, DC-, DC+/+1, +2/B1, B2			Terminals ⏚		
	Max. Wire Gauge	Min. Wire Gauge	Screw & Torque (±10%)	Max. Wire Gauge	Min. Wire Gauge	Screw & Torque (±10%)
VFD25AME23ANNAA VFD25AME23ANSAA	10 mm² [8 AWG]	10 mm² [8 AWG]	M4 20 Kg-cm [17.4 lb-in.] [1.96 Nm]	10 mm² [8 AWG]	10 mm² [8 AWG]	M4 20 Kg-cm [17.4 lb-in.] [1.96 Nm]
VFD13AME43ANNAA VFD13AME43AFNAA VFD13AME43ANSAA VFD13AME43AFSAA		6 mm² [10 AWG]		6 mm² [10 AWG]	6 mm² [10 AWG]	
VFD17AME43ANNAA VFD17AME43AFNAA VFD17AME43ANSAA VFD17AME43AFSAA		10 mm² [8 AWG]		10 mm² [8 AWG]	10 mm² [8 AWG]	

Table 5-6

[This page intentionally left blank]

Chapter 6 Control Terminals

6-1 Control Terminals

6-1 Control Terminals

CAUTION

Analog input terminals (AI, ACM)

- ☑ Analog input signals are easily affected by external noise. Use shielded wiring and keep it as short as possible (less than 20 m) with proper grounding. If the noise is inductive, connecting the shield to the ACM terminal can reduce interference.
- ☑ Use twisted-pair wire for weak analog signals.
- ☑ If the analog input signals are affected by noise from the drive, connect a capacitor and ferrite core as shown in the following diagram.

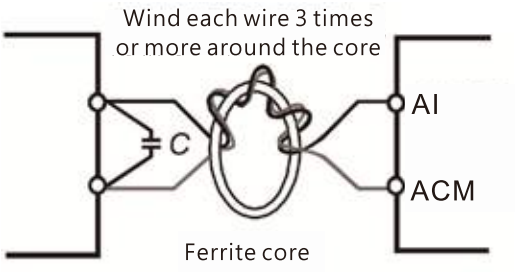

Contact input terminals (MI1–MI5, DCM, +24 V_{DC})

① Sink Mode
with internal power (+24 V_{DC})

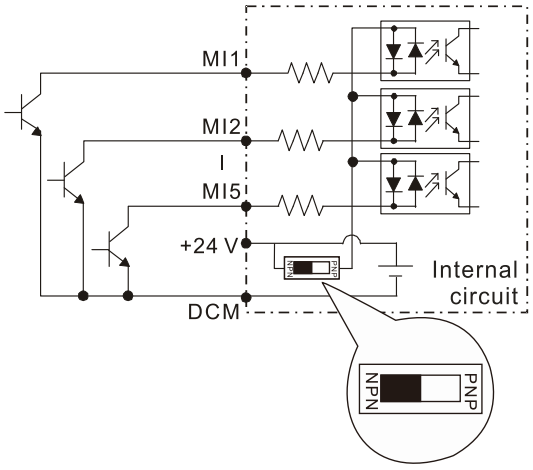

② Source Mode
with internal power (+24 V_{DC})

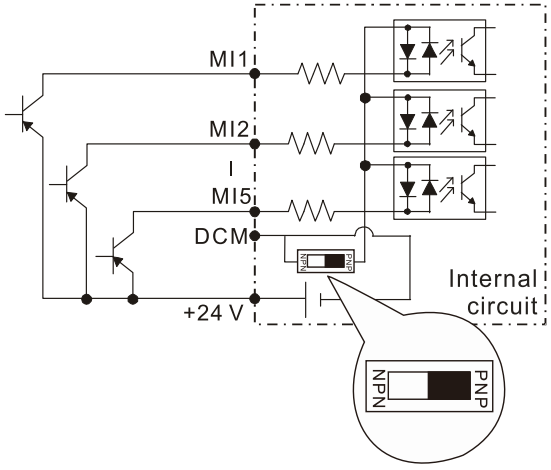

③ Sink Mode
with external power

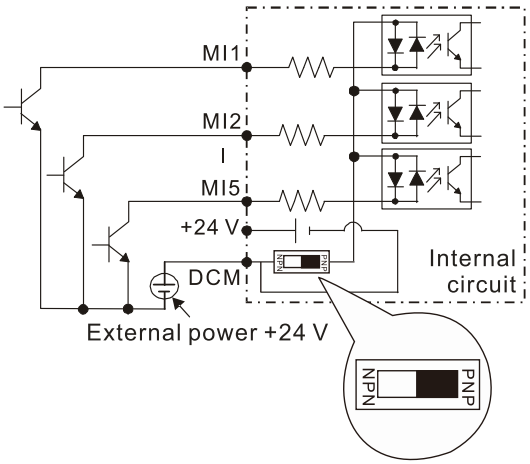

④ Source Mode
with external power

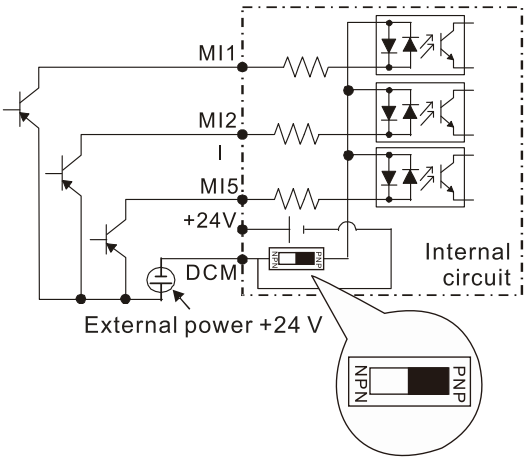

- ☑ When using internal power, the terminal switches to NPN is collinear with 24V, and switches to PNP is collinear with DCM.
- ☑ It's Sink mode when the external transistor is NPN, and its Source mode when the external transistor is PNP.

Transistor output terminals (MO1, MCM)

☑ Make sure to connect the digital outputs to the correct polarity. See the wiring diagram when connecting a relay to the digital output, connect a surge absorber across the coil, and check the polarity.

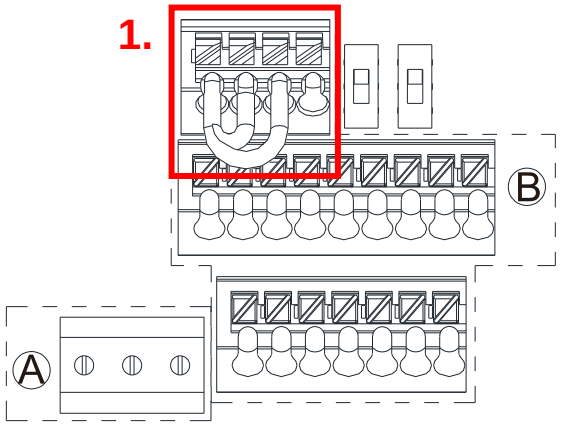

Control Terminal Distribution Diagram

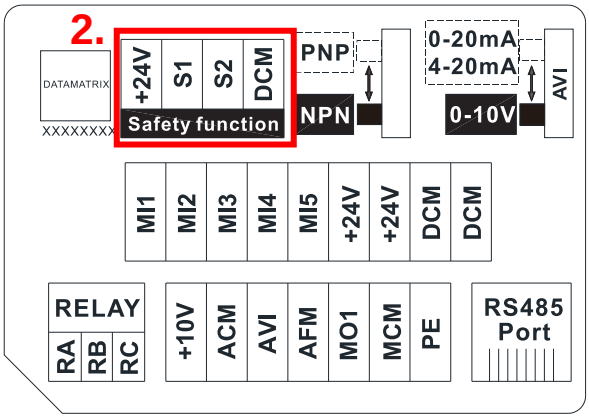

Control Terminal Location Map

Wiring precautions:

- As 1. and 2. shows in the figure above, +24 V, S1, S2, and DCM are for built-in STO models only.
- The default condition is +24 V / S1 / S2 shorted by jumper of build-in STO model, as 1. shows in the figure above. Refer to Chapter 4 WIRING for more details.
  Build-in STO model: VFD_ _ _ME_ _A_ S AA.
- The +24 V of safety function is for STO only, as **1.** and **2.** shows in the figure above, and cannot be used for other purpose.
- The RELAY terminal uses the PCB terminal block (as area **A** shows in the figure above):
  1. Tighten the wiring with a 2.5 mm (wide) x 0.4 mm (thick) slotted screwdriver.
  2. The ideal length of stripped wire at the connection side is 9–10 mm.
  3. When wiring bare wires, make sure they are perfectly arranged to go through the wiring holes.
- The Control terminal uses a spring clamp terminal block (as area **B** shows in the figure above):
  1. When removing wires, use the slotted screwdriver to press down the terminal, and the suggested force is 1.5 kgf.
  2. Slotted screwdriver: 2.5 mm width and 0.4 mm thickness
  3. When wiring bare wires, make sure they are perfectly arranged to go through the wiring holes.

Wiring Specifications of Control Terminals

Function name	Conductor cross section	Stripping length (mm)	Maximum Wire Gauge	Minimum Wire Gauge	Screw size Tightening torque (±10%)
RELAY Terminals	solid wire	9–10	1.5 mm^2 [16 AWG]	0.2 mm^2 [24 AWG]	5 Kg-cm [4.3 lb-in.] [0.49 Nm]
	stranded wire				
Control Terminals	solid wire	9	0.75 mm^2 [18 AWG]	0.2 mm^2 [24 AWG]	
	stranded wire				
	Stranded with ferrules with plastic sleeve	9	0.5 mm^2 [20 AWG]		

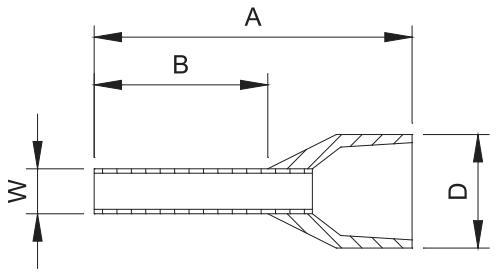

Unit: mm

Recommended model and size of crimp terminals						
AWG	VENDOR	VENDOR P/N	A (MAX)	B (MAX)	D (MAX)	W (MAX)
0.25 mm^2 [24 AWG]	PHOENIX CONTACT	AI 0,25- 8 YE	12.5	8	2.6	1.1
0.34 mm^2 [22 AWG]	PHOENIX CONTACT	AI 0,34- 8 TQ	12.5	8	3.3	1.3
0.5 mm^2 [20 AWG]	PHOENIX CONTACT	AI 0,5 - 8 WH	14	8	3.5	1.4
Recommended model and specifications of crimp tool: CRIMPFOX 10S - 1212045, Manufacturer: PHOENIX CONTACT DNT13-0101, Manufacturer: DINKLE						

Terminals	Terminal Function	Description
+24 V_{DC}	Digital control signal common (Source)	+24 V_{DC} ± 10% 100 mA
MI1 – MI5	Multi-function input 1–5	Refer to Pr.02-01–Pr.02-05 to program the multi-function inputs MI1–MI5. Source Mode ON: activation current is 3.3 mA, and breakover voltage is 11 V_{DC} OFF: cut-off voltage ≤ 5 V_{DC} Sink Mode ON: activation current is 3.3 mA, and breakover voltage is 13 V_{DC} OFF: cut-off voltage ≥ 19 V_{DC} ■ When Pr.02-00 = 0, MI1 and MI2 can be programmed. ■ When Pr.02-00 ≠ 0, the function of MI1 and MI2 is according to Pr.02-00 setting. ■ When MI5 uses pulse input, the maximum input frequency = 10 kHz. ■ When MI5 uses PWM pulse input, the maximum input frequency = 1 kHz.
MO1	Multi-function Output 1 (photo coupler)	Programmable open-collector outputs, see Pr.02-16. 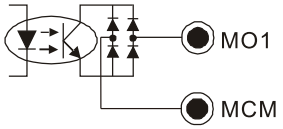 Max 48 V_{DC} 50 mA
MCM	Multi-function Output Common	

<table>
<tr><th>Terminals</th><th>Terminal Function</th><th>Description</th></tr>
<tr><td>RA</td><td>Multi-function output (Relay N.O. a)</td><td rowspan="3">Resistive Load
3 A (N.O.)/3 A (N.C.) 250 V_{AC}
5 A (N.O.)/3 A (N.C.) 30 V_{DC}
Inductive Load (COS = 0.4)
1.2 A (N.O.)/1.2 A (N.C.) 250 V_{AC}
2.0 A (N.O.)/1.2 A (N.C.) 30 V_{DC}
Various kinds of monitor signals output, e.g.: operation, frequency reached, overload indication etc.</td></tr>
<tr><td>RB</td><td>Multi-function output (Relay N.C. b)</td></tr>
<tr><td>RC</td><td>Multi-function output common (Relay)</td></tr>
<tr><td>+10 V_{DC}</td><td>Potentiometer power supply</td><td>+10.5 ± 0.5 V_{DC} / 20 mA</td></tr>
<tr><td>AI</td><td>Analog input</td><td>The AVI terminal default voltage mode is set to 0–10 V. To use the current mode, the AVI must be switched to the current mode position (0–20 mA / 4–20 mA), as the red frame below shows, and then set Pr.03-28.
 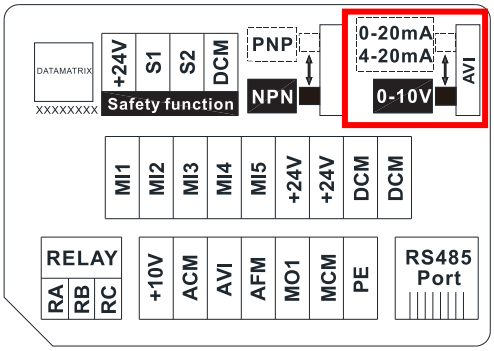

Voltage (AVI) mode
 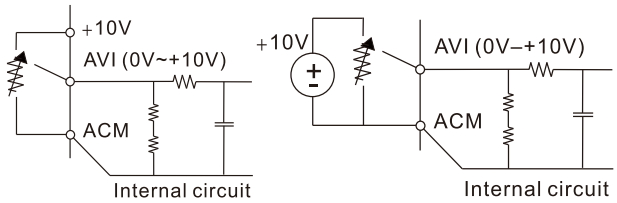

Impedance: 20 kΩ
Range: 0–10 V = 0–Max. Output Frequency (Pr.01-00)
Range switching according to Pr.03-00, Pr.03-28.
AVI resolution = 12 bits
Current (ACI) mode
 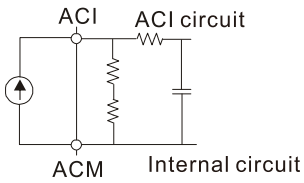

Impedance: 250 Ω
Range: 0–20 mA / 4–20 mA = 0–Max. Output Frequency (Pr.01-00)
Range switching according to Pr.03-28.
ACI resolution = 12 bits</td></tr>
</table>

Terminals	Terminal Function	Description
AFM	Multi-function analog voltage output	Switch: The AFM default is 0–10 V (voltage mode). Voltage mode 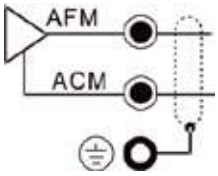 Range: 0–10 V corresponding to the maximum operating range of the control object Max. output current: 2 mA. Max. Load: 5 kΩ AFM resolution = 12 bits
ACM	Analog Signal Common	Common for analog terminals
PE	RS-485	PE terminal is for shielded cable to grounding to decrease the interference when you use RS485 communication.
RJ45	PIN 1, 2, 6: Reserved PIN 3, 7: GND2 PIN 4: SG- PIN 5: SG+ PIN 8: D+10 V (provide KPC-CC01 power supply)	

* Analog control signal wiring specification: 0.82 mm^2 [18 AWG] with shielded stranded wire.

[This page intentionally left blank]

Chapter 7 Optional Accessories

7-1 Brake Resistors and Brake Units Used in AC Motor Drives
7-2 Magnetic Contactor / Air Circuit Breaker and Non-fuse Circuit Breaker
7-3 Fuse Specification Chart
7-4 AC / DC Reactor
7-5 Zero Phase Reactors
7-6 EMC Filter
7-7 EMC Shield Plate
7-8 Capacitive Filter
7-9 NEMA 1 / UL Type 1 Kit
7-10 Fan Kit
7-11 DIN-Rail Mounting
7-12 Mounting Adapter Plate
7-13 Digital Keypad–KPC-CC01, KPC-CE01

The optional accessories listed in this chapter are available upon request. Installing additional accessories to your drive substantially improves the drive's performance. Select accessories according to your need or contact your local distributor for suggestions.

7-1 Brake Resistors and Brake Units Used in AC Motor Drives

115V one-phase

Model	Applicable Motor		*1 125% Braking Torque 10% ED						Max. Braking Torque		
	HP	kW	*2 Braking Torque (kg-m)	Resistor Value Spec. for Each AC Motor Drive	Brake Resistor for Each Brake Unit			Braking Current (A)	Min. Resistor Value (Ω)	Max. Total Braking Current (A)	Peak Power (kW)
					*3 Part No.	Q'ty	Usage				
VFD0A8ME11ANNAA VFD0A8ME11ANSAA	0.13	0.1	0.1	80W 750Ω	BR080W750	1	-	0.5	380.0	1	0.4
VFD1A6ME11ANNAA VFD1A6ME11ANSAA	0.25	0.2	0.1	80W 750Ω	BR080W750	1	-	0.5	190.0	2	0.8
VFD2A5ME11ANNAA VFD2A5ME11ANSAA	0.5	0.4	0.3	80W 200Ω	BR080W200	1	-	1.9	95.0	4	1.5
VFD4A8ME11ANNAA VFD4A8ME11ANSAA	1	0.75	0.5	80W 200Ω	BR080W200	1	-	1.9	63.3	6	2.3

Table 7-1

230V one-phase

Model	Applicable Motor		*1 125% Braking Torque 10% ED						Max. Braking Torque		
	HP	kW	*2 Braking Torque (kg-m)	Resistor Value Spec. for Each AC Motor Drive	Brake Resistor for Each Brake Unit			Braking Current (A)	Min. Resistor Value (Ω)	Max. Total Braking Current (A)	Peak Power (kW)
					*3 Part No.	Q'ty	Usage				
VFD0A8ME21ANNAA VFD0A8ME21AFNAA VFD0A8ME21ANSAA VFD0A8ME21AFSAA	0.13	0.1	0.1	80W 750Ω	BR080W750	1	-	0.5	380.0	1	0.4
VFD1A6ME21ANNAA VFD1A6ME21AFNAA VFD1A6ME21ANSAA VFD1A6ME21AFSAA	0.25	0.2	0.1	80W 750Ω	BR080W750	1	-	0.5	190.0	2	0.8
VFD2A8ME21ANNAA VFD2A8ME21AFNAA VFD2A8ME21ANSAA VFD2A8ME21AFSAA	0.5	0.4	0.3	80W 200Ω	BR080W200	1	-	1.9	95.0	4	1.5
VFD4A8ME21ANNAA VFD4A8ME21AFNAA VFD4A8ME21ANSAA VFD4A8ME21AFSAA	1	0.75	0.5	80W 200Ω	BR080W200	1	-	1.9	63.3	6	2.3
VFD7A5ME21ANNAA VFD7A5ME21AFNAA VFD7A5ME21ANSAA VFD7A5ME21AFSAA	2	1.5	1	200W 91Ω	BR200W091	1	-	4.2	47.5	8	3.0
VFD11AME21ANNAA VFD11AME21AFNAA VFD11AME21ANSAA VFD11AME21AFSAA	3	2.2	1.5	300W 70Ω	BR300W070	1	-	5.4	38.0	10	3.8

Table 7-2

230V three-phase

Model	Applicable Motor		*1 125% Braking Torque 10% ED						Max. Braking Torque		
	HP	kW	*2 Braking Torque (kg-m)	Resistor Value Spec. for Each AC Motor Drive	Brake Resistor for Each Brake Unit			Braking Current (A)	Min. Resistor Value (Ω)	Max. Total Braking Current (A)	Peak Power (kW)
					*3 Part No.	Q'ty	Usage				
VFD0A8ME23ANNAA VFD0A8ME23ANSAA	0.13	0.1	0.1	80W 750Ω	BR080W750	1	-	0.5	380.0	1	0.4
VFD1A6ME23ANNAA VFD1A6ME23ANSAA	0.25	0.2	0.1	80W 750Ω	BR080W750	1	-	0.5	190.0	2	0.8
VFD2A8ME23ANNAA VFD2A8ME23ANSAA	0.5	0.4	0.3	80W 200Ω	BR080W200	1	-	1.9	95.0	4	1.5
VFD4A8ME23ANNAA VFD4A8ME23ANSAA	1	0.75	0.5	80W 200Ω	BR080W200	1	-	1.9	63.3	6	2.3

Model	Applicable Motor		*1 125% Braking Torque 10% ED						Max. Braking Torque		
	HP	kW	*2 Braking Torque (kg-m)	Resistor Value Spec. for Each AC Motor Drive	Brake Resistor for Each Brake Unit			Braking Current (A)	Min. Resistor Value (Ω)	Max. Total Braking Current (A)	Peak Power (kW)
					*3 Part No.	Q'ty	Usage				
VFD7A5ME23ANNAA VFD7A5ME23ANSAA	2	1.5	1	200W 91Ω	BR200W091	1	-	4.2	47.5	8	3.0
VFD11AME23ANNAA VFD11AME23ANSAA	3	2.2	1.5	300W 70Ω	BR300W070	1	-	5.4	38.0	10	3.8
VFD17AME23ANNAA VFD17AME23ANSAA	5	3.7/4	2.5	400W 40Ω	BR400W040	1	-	9.5	19.0	20	7.6
VFD25AME23ANNAA VFD25AME23ANSAA	7.5	5.5	3.7	1000W 20Ω	BR1K0W020	1		19	16.5	23	8.7

Table 7-3

460V three-phase

Model	Applicable Motor		*1 125% Braking Torque 10% ED						Max. Braking Torque		
	HP	kW	*2 Braking Torque (kg-m)	Resistor Value Spec. for Each AC Motor Drive	Brake Resistor for Each Brake Unit			Braking Current (A)	Min. Resistor Value (Ω)	Max. Total Braking Current (A)	Peak Power (kW)
					*3 Part No.	Q'ty	Usage				
VFD1A5ME43ANNAA VFD1A5ME43AFNAA VFD1A5ME43ANSAA VFD1A5ME43AFSAA	0.5	0.4	0.3	80W 750Ω	BR080W750	1	-	1	380.0	2	1.5
VFD2A7ME43ANNAA VFD2A7ME43AFNAA VFD2A7ME43ANSAA VFD2A7ME43AFSAA	1	0.75	0.5	80W 750Ω	BR080W750	1	-	1	190.0	4	3.0
VFD4A2ME43ANNAA VFD4A2ME43AFNAA VFD4A2ME43ANSAA VFD4A2ME43AFSAA	2	1.5	1	200W 360Ω	BR200W360	1	-	2.1	126.7	6	4.6
VFD5A5ME43ANNAA VFD5A5ME43AFNAA VFD5A5ME43ANSAA VFD5A5ME43AFSAA	3	2.2	1.5	300W 250Ω	BR300W250	1	-	3	108.6	7	5.3
VFD7A3ME43ANNAA VFD7A3ME43ANSAA VFD7A3ME43AFNAA VFD7A3ME43AFSAA	4	3	2	400W 150Ω	BR400W150	1	2 in series	5.1	95.0	8	6.1
VFD09AME43ANNAA VFD09AME43AFNAA VFD09AME43ANSAA VFD09AME43AFSAA	5	3.7/4	2.5	400W 150Ω	BR400W150	1	-	5.1	84.4	9	6.8
VFD13AME43ANNAA VFD13AME43AFNAA VFD13AME43ANSAA VFD13AME43AFSAA	7.5	5.5	3.7	1000W 75Ω	BR1K0W075	1	-	10.2	50.7	15	11.4
VFD17AME43ANNAA VFD17AME43AFNAA VFD17AME43ANSAA VFD17AME43AFSAA	10	7.5	5.1	1000W 75Ω	BR1K0W075	1	-	10.2	40.0	19	14.4

Table 7-4

*1. Calculation for 125% brake torque: (kW)*125%*0.8; where 0.8 is motor efficiency.

Because of the limited resistor power, the longest operation time for 10% ED is 10 seconds (ON: 10 sec. / OFF: 90 sec.).

*2. The calculation of the brake resistor is based on a four-pole motor (1800 rpm).

*3. For heat dissipation, a resistors of 400 W or lower should be fixed to the frame and maintain the surface temperature below 250°C; a resistor of 1000 W and above should maintain the surface temperature below 350°C.

(If the surface temperature is higher than the temperature limit, install extra cooling or increase the size of the resistor.)

NOTE:

1. Select the resistance value, power and brake usage (ED %) according to Delta rules.

   Definition for Brake Usage ED%

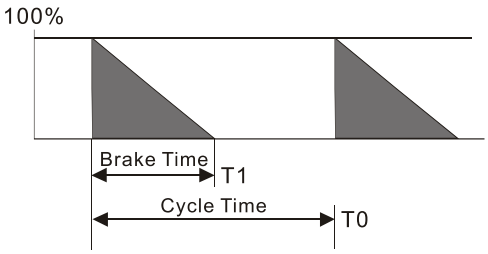

ED% = T1 / T0 x 100(%)

Explanation:
Brake usage ED (%) is the amount of time needed for the brake unit and brake resistor to dissipate heat generated by braking. When the brake resistor heats up, the resistance increases with temperature, and braking torque decreases accordingly.

Figure 7-1

For safety, install a thermal overload relay (O.L) between the brake unit and the brake resistor in conjunction with the magnetic contactor (MC) before the drive for additional protection. The thermal overload relay protects the brake resistor from damage due to frequent or continuous braking. Under such circumstances, turn off the power to prevent damage to the brake resistor, brake unit and drive.

NOTE: Never use it to disconnect the brake resistor.

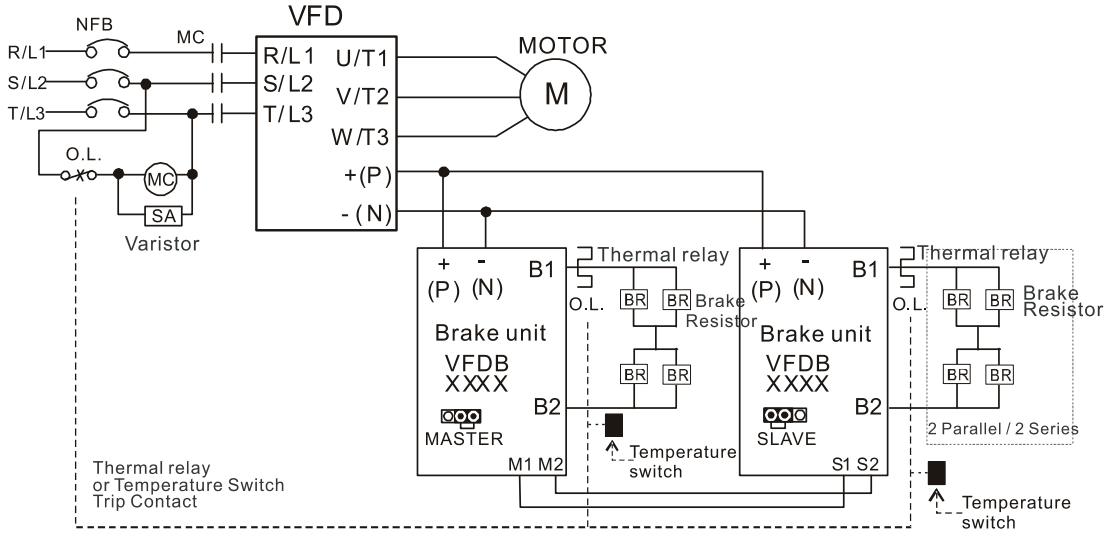

- When AC Drive is equipped with a DC reactor, please read user manual for the correct wiring for the brake unit input circuit +(P).
- DO NOT connect input circuit -(N) to the neutral point of the power system.

Figure 7-2

2. Any damage to the drive or other equipment caused by using brake resistors and brake modules that are not provided by Delta voids the warranty.
3. Consider environmental safety factors when installing the brake resistors. If you use the minimum resistance value, consult local dealers for the power calculation.
4. When using more than two brake units, the equivalent resistor value of the parallel brake unit cannot be less than the value in the column “Min. Resistor Value [Ω]”. Read the wiring information in the brake unit instruction sheet thoroughly prior to operation. Visit the following links to get the instruction sheets for the wiring in the brake unit:
   - VFDB2015 / 2022 / 4030 / 4045 / 5055 Braking Modules Instruction Sheet
     http://www.deltaww.com/filecenter/Products/download/06/060101/Option/DELTA_IA-MDS_VFDB_I_EN_20070719.pdf
   - VFDB4110 / 4160 / 4185 Braking Modules Instruction Sheet
     http://www.deltaww.com/filecenter/Products/download/06/060101/Option/DELTA_IA-MDS_VFDB4110-4160-4185_I_EN_20101011.pdf

- VFDB6055 / 6110 / 6160 / 6200 Braking Modules Instruction Sheet
  http://www.deltaww.com/filecenter/Products/download/06/060101/Option/DELTA_IA-MDS_VFDB6055-6110-6160-6200_I_TSE_20121030.pdf

5. The selection tables are for normal usage. If the AC motor drive requires frequent braking, increase the Watts by two to three times.
6. Thermal Overload Relay (TOR):

   Thermal overload relay selection is based on its overload capacity. A standard braking capacity of the ME300 is 10% ED (Tripping time=10 s). As shown in the figure below, a 460V, 7.5 kW ME300 required the thermal relay to take 260% overload capacity for 10 seconds (hot starting) and the braking current is 10.2A. In this case, select a thermal overload relay rated at 5 A (5 * 260% = 13 A > 10.2 A). The property of each thermal relay may vary among different manufacturers. Carefully read the specification before using it.

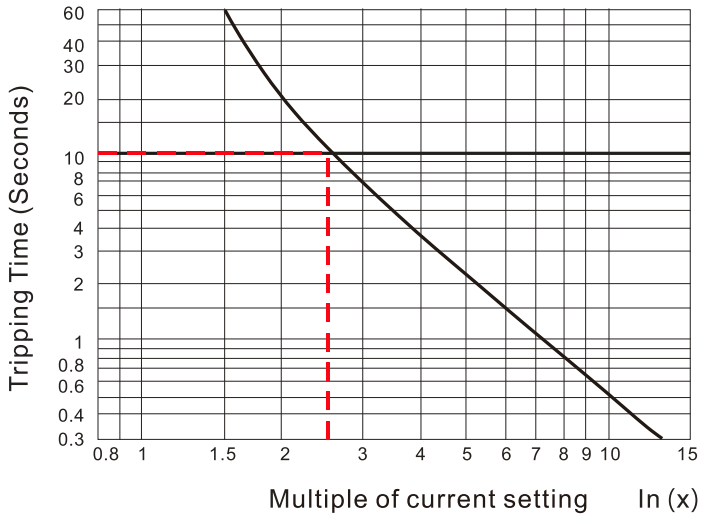

Figure 7-3

7-2 Magnetic Contactor / Air Circuit Breaker and Non-fuse Circuit Breaker

Magnetic Contactor (MC) and Air Circuit Breaker (ACB)

It is recommended the surrounding temperature for MC should be ≥ 60°C and that for ACB should be ≥ 50°C. In the meanwhile, consider temperature derating for components with ON / OFF switch in accordance with the ambient temperature of the on-site distribution panel.

115V Models

Frame	Model	Heavy Duty Output Current (A)	Heavy Duty Input Current (A)	MC / ACB Selection (A)
A	VFD0A8ME11ANNAA VFD0A8ME11ANSAA	0.8	3	9
	VFD1A6ME11ANNAA VFD1A6ME11ANSAA	1.6	6	11
	VFD2A5ME11ANNAA VFD2A5ME11ANSAA	2.5	9.4	18
C	VFD4A8ME11ANNAA VFD4A8ME11ANSAA	4.8	18	32

Table 7-5

230V Models

Frame	Model	Heavy Duty Output Current (A)	Heavy Duty Input Current (A)	MC / ACB Selection (A)
A	VFD0A8ME21ANNAA VFD0A8ME21ANSAA	0.8	2.6	9
	VFD1A6ME21ANNAA VFD1A6ME21ANSAA	1.6	5.1	9
	VFD2A8ME21ANNAA VFD2A8ME21ANSAA	2.8	7.3	13
	VFD0A8ME23ANNAA VFD0A8ME23ANSAA	0.8	0.95	9
	VFD1A6ME23ANNAA VFD1A6ME23ANSAA	1.6	1.9	9
	VFD2A8ME23ANNAA VFD2A8ME23ANSAA	2.8	3.4	9
	VFD4A8ME23ANNAA VFD4A8ME23ANSAA	4.8	5.8	9
B	VFD0A8ME21AFNAA VFD0A8ME21AFSAA	0.8	2.6	9
	VFD1A6ME21AFNAA VFD1A6ME21AFSAA	1.6	5.1	9
	VFD2A8ME21AFNAA VFD2A8ME21AFSAA	2.8	7.3	13
	VFD4A8ME21AFNAA VFD4A8ME21ANNAA VFD4A8ME21AFSAA VFD4A8ME21ANSAA	4.8	10.8	18
	VFD7A5ME23ANNAA VFD7A5ME23ANSAA	7.5	9	18
C	VFD7A5ME21ANNAA VFD7A5ME21AFNAA VFD7A5ME21ANSAA VFD7A5ME21AFSAA	7.5	16.5	32

Frame	Model	Heavy Duty Output Current (A)	Heavy Duty Input Current (A)	MC / ACB Selection (A)
C	VFD11AME21ANNAA VFD11AME21AFNAA VFD11AME21ANSAA VFD11AME21AFSAA	11	24.2	40
	VFD11AME23ANNAA VFD11AME23ANSAA	11	13.2	22
	VFD17AME23ANNAA VFD17AME23ANSAA	17	20.4	32
D	VFD25AME23ANNAA VFD25AME23ANSAA	25	30	55

Table 7-6

460V Models

Frame	Model	Heavy Duty Output Current (A)	Heavy Duty Input Current (A)	MC / ACB Selection (A)
A	VFD1A5ME43ANNAA VFD1A5ME43ANSAA	1.5	2.1	7
	VFD2A7ME43ANNAA VFD2A7ME43ANSAA	2.7	3.7	7
B	VFD1A5ME43AFNAA VFD1A5ME43AFSAA	1.5	2.1	7
	VFD2A7ME43AFNAA VFD2A7ME43AFSAA	2.7	3.7	7
	VFD4A2ME43ANNAA VFD4A2ME43AFNAA VFD4A2ME43ANSAA VFD4A2ME43AFSAA	4.2	5.8	9
C	VFD5A5ME43ANNAA VFD5A5ME43AFNAA VFD5A5ME43ANSAA VFD5A5ME43AFSAA	5.5	6.1	12
	VFD7A3ME43ANNAA VFD7A3ME43AFNAA VFD7A3ME43ANSAA VFD7A3ME43AFSAA	7.3	8.1	18
	VFD9A0ME43ANNAA VFD9A0ME43AFNAA VFD9A0ME43ANSAA VFD9A0ME43AFSAA	9	9.9	18
D	VFD13AME43ANNAA VFD13AME43AFNAA VFD13AME43ANSAA VFD13AME43AFSAA	13	14.3	32
	VFD17AME43ANNAA VFD17AME43AFNAA VFD17AME43ANSAA VFD17AME43AFSAA	17	18.7	40

Table 7-7

Non-fuse Circuit Breaker

Comply with the UL standard: Per UL 508, paragraph 45.8.4, part a.

The rated current of the non-fuse circuit breaker should be 1.6–2.6 times the drive's rated input current. The recommended current values are shown in the table below. Compare the time characteristics of the non-fuse circuit breaker with those of the drive's overheated protection to ensure that there is no tripping.

Model	Voltage / One-phase (Three-phase)	Breaker Rated Input Recommended Current (A)
		Heavy Duty
VFD0A8ME11ANNAA VFD0A8ME11ANSAA	115V / One-phase	20
VFD1A6ME11ANNAA VFD1A6ME11ANSAA		20
VFD2A5ME11ANNAA VFD2A5ME11ANSAA		25
VFD4A8ME11ANNAA VFD4A8ME11ANSAA		50
VFD0A8ME21ANNAA VFD0A8ME21AFNAA VFD0A8ME21ANSAA VFD0A8ME21AFSAA	230V / One-phase	15
VFD1A6ME21ANNAA VFD1A6ME21AFNAA VFD1A6ME21ANSAA VFD1A6ME21AFSAA		15
VFD2A8ME21ANNAA VFD2A8ME21AFNAA VFD2A8ME21ANSAA VFD2A8ME21AFSAA		20
VFD4A8ME21ANNAA VFD4A8ME21AFNAA VFD4A8ME21ANSAA VFD4A8ME21AFSAA		30
VFD7A5ME21ANNAA VFD7A5ME21AFNAA VFD7A5ME21ANSAA VFD7A5ME21AFSAA		45
VFD11AME21ANNAA VFD11AME21AFNAA VFD11AME21ANSAA VFD11AME21AFSAA		70
VFD0A8ME23ANNAA VFD0A8ME23ANSAA	230V / Three-phase	15
VFD1A6ME23ANNAA VFD1A6ME23ANSAA		15
VFD2A8ME23ANNAA VFD2A8ME23ANSAA		15
VFD4A8ME23ANNAA VFD4A8ME23ANSAA		15

Model	Voltage / One-phase (Three-phase)	Breaker Rated Input Recommended Current (A)
		Heavy Duty
VFD7A5ME23ANNAA VFD7A5ME23ANSAA	230V / Three-phase	25
VFD11AME23ANNAA VFD11AME23ANSAA		40
VFD17AME23ANNAA VFD17AME23ANSAA		60
VFD25AME23ANNAA VFD25AME23ANSAA		63
VFD1A5ME43ANNAA VFD1A5ME43AFNAA VFD1A5ME43ANSAA VFD1A5ME43AFSAA	460V / Three-phase	15
VFD2A7ME43ANNAA VFD2A7ME43AFNAA VFD2A7ME43ANSAA VFD2A7ME43AFSAA		15
VFD4A2ME43ANNAA VFD4A2ME43AFNAA VFD4A2ME43ANSAA VFD4A2ME43AFSAA		15
VFD5A5ME43ANNAA VFD5A5ME43AFNAA VFD5A5ME43ANSAA VFD5A5ME43AFSAA		20
VFD7A3ME43ANNAA VFD7A3ME43ANSAA VFD7A3ME43AFNAA VFD7A3ME43AFSAA		25
VFD9A0ME43ANNAA VFD9A0ME43AFNAA VFD9A0ME43ANSAA VFD9A0ME43AFSAA		30
VFD13AME43ANNAA VFD13AME43AFNAA VFD13AME43ANSAA VFD13AME43AFSAA		32
VFD17AME43ANNAA VFD17AME43AFNAA VFD17AME43ANSAA VFD17AME43AFSAA		45

Table 7-8

7-3 Fuse Specification Chart

☑ Fuse specifications lower than the table below are allowed.

☑ For installation in the United States, branch circuit protection must be provided in accordance with the National Electrical Code (NEC) and any applicable local codes. Use UL classified fuses to fulfill this requirement.

☑ For installation in Canada, branch circuit protection must be provided in accordance with Canadian Electrical Code and any applicable provincial codes. Use UL classified fuses to fulfill this requirement.

Model	Voltage / One-phase (Three-phase)	Branch Circuit Fuses Output (A)
VFD0A8ME11ANNAA	115V / One-phase	7.2
VFD0A8ME11ANSAA		Class T JJS-10 600 V_{AC}
VFD1A6ME11ANNAA		7.2
VFD1A6ME11ANSAA		Class T JJS-10 600 V_{AC}
VFD2A5ME11ANNAA		10.8
VFD2A5ME11ANSAA		Class T JJS-10 600 V_{AC}
VFD4A8ME11ANNAA		22
VFD4A8ME11ANSAA		Class T JJS-25 600 V_{AC}
VFD0A8ME21ANNAA VFD0A8ME21AFNAA	230V / One-phase	7.2
VFD0A8ME21ANSAA VFD0A8ME21AFSAA		Class T JJS-10 600 V_{AC}
VFD1A6ME21ANNAA VFD1A6ME21AFNAA		7.2
VFD1A6ME21ANSAA VFD1A6ME21AFSAA		Class T JJS-10 600 V_{AC}
VFD2A8ME21ANNAA VFD2A8ME21AFNAA		12.8
VFD2A8ME21ANSAA VFD2A8ME21AFSAA		Class T JJS-15 600 V_{AC}
VFD4A8ME21ANNAA VFD4A8ME21AFNAA		20
VFD4A8ME21ANSAA VFD4A8ME21AFSAA		Class T JJS-20 600 V_{AC}
VFD7A5ME21ANNAA VFD7A5ME21AFNAA		34
VFD7A5ME21ANSAA VFD7A5ME21AFSAA		Class T JJS-35 600 V_{AC}
VFD11AME21ANNAA VFD11AME21AFNAA		50
VFD11AME21ANSAA VFD11AME21AFSAA		Class T JJS-50 600 V_{AC}
VFD0A8ME23ANNAA	230V / Three-phase	7.2
VFD0A8ME23ANSAA		Class T JJS-10 600 V_{AC}
VFD1A6ME23ANNAA		7.2
VFD1A6ME23ANSAA		Class T JJS-10 600 V_{AC}

Model	Voltage / One-phase (Three-phase)	Branch Circuit Fuses Output (A)
VFD2A8ME23ANNAA	230V / Three-phase	12.8
VFD2A8ME23ANSAA		Class T JJS-15 600 V_{AC}
VFD4A8ME23ANNAA		20
VFD4A8ME23ANSAA		Class T JJS-20 600 V_{AC}
VFD7A5ME23ANNAA		32
VFD7A5ME23ANSAA		Class T JJS-35 600 V_{AC}
VFD11AME23ANNAA		50
VFD11AME23ANSAA		Class T JJS-50 600 V_{AC}
VFD17AME23ANNAA		78
VFD17AME23ANSAA		Class T JJS-80 600 V_{AC}
VFD25AME23ANNAA		59.4
VFD25AME23ANSAA		Class T JJS-60 600 V_{AC}
VFD1A5ME43ANNAA VFD1A5ME43AFNAA	460V / Three-phase	7.2
VFD1A5ME43ANSAA VFD1A5ME43AFSAA		Class T JJS-10 600 V_{AC}
VFD2A7ME43ANNAA VFD2A7ME43AFNAA		12
VFD2A7ME43ANSAA VFD2A7ME43AFSAA		Class T JJS-15 600 V_{AC}
VFD4A2ME43ANNAA VFD4A2ME43AFNAA		18.4
VFD4A2ME43ANSAA VFD4A2ME43AFSAA		Class T JJS-20 600 V_{AC}
VFD5A5ME43ANNAA VFD5A5ME43AFNAA		26
VFD5A5ME43ANSAA VFD5A5ME43AFSAA		Class T JJS-25 600 V_{AC}
VFD7A3ME43ANNAA VFD7A3ME43ANSAA		35
VFD7A3ME43AFNAA VFD7A3ME43AFSAA		Class T JJS-35 600 V_{AC}
VFD9A0ME43ANNAA VFD9A0ME43AFNAA		42
VFD9A0ME43ANSAA VFD9A0ME43AFSAA		Class T JJS-45 600 V_{AC}
VFD13AME43ANNAA VFD13AME43AFNAA		34.54
VFD13AME43ANSAA VFD13AME43AFSAA		Class T JJS-35 600 V_{AC}
VFD17AME43ANNAA VFD17AME43AFNAA		45.1
VFD17AME43ANSAA VFD17AME43AFSAA		Class T JJS-45 600 V_{AC}

Table 7-9

7-4 AC / DC Reactor

AC input reactor

Installing an AC reactor on the input side of an AC motor drive can increase line impedance, improve the power factor, reduce input current, and reduce interference generated from the motor drive. It also reduces momentary voltage surges or abnormal current spikes. For example, when the main power capacity is higher than 500 kVA, or when using a switching capacitor bank, momentary voltage and current spikes may damage the AC motor drive's internal circuit. An AC reactor on the input side of the AC motor drive protects it by suppressing surges.

Installation: Install an AC input reactor in drives with the main power to the three input phases R S T.

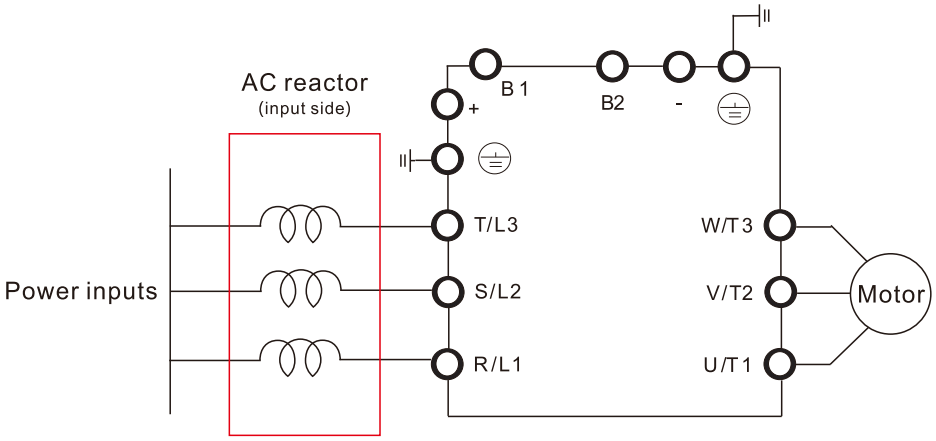

Figure 7-4

AC Output Reactor

GF (Ground Fault), OC (Over-current) and voltage over-shoot easily occur when the drive is applied for long output conduit. GF and OC may cause the drive to malfunction due to the drive's self-protective mechanism; voltage over-shoot causes damage to motor insulation.

Too long an output conduit may trigger larger parasitic capacitances to the ground and higher three-phase output common mode current, further making the drive activate the GF protection. Moreover, the larger line-to-line and line-to-ground parasitic capacitances lead to inrush current, making the drive's over-outputted current enable OC protection. To prevent this, connecting a reactor to the output terminals of the drive can usually increase high frequency resistance and reduce the current generated from parasitic capacitances.

Installation: Install an AC output reactor in drives with the main power to the three input phases U V W.

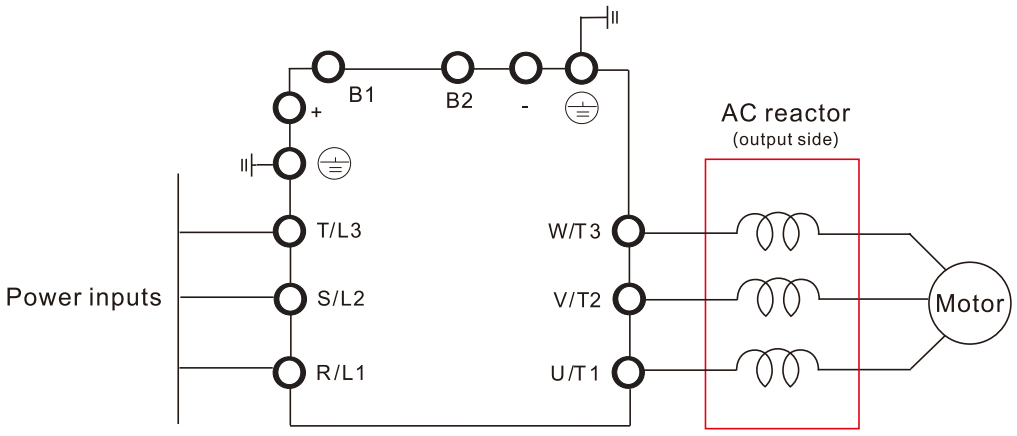

Figure 7-5

DC reactor

DC reactor can also improve the power factor, reduce input current, and reduce interference generated from the motor drive. A DC reactor stabilizes the DC BUS voltage. Compared to an AC input reactor, the advantages are smaller size, lower price, and lower voltage drop (lower power dissipation).

Installation: Install the DC reactor between terminals +1 and +2. Remove the jumper, before installing the DC reactor.

Note: 115V models have no DC choke.

Input: one-phase / three-phase power

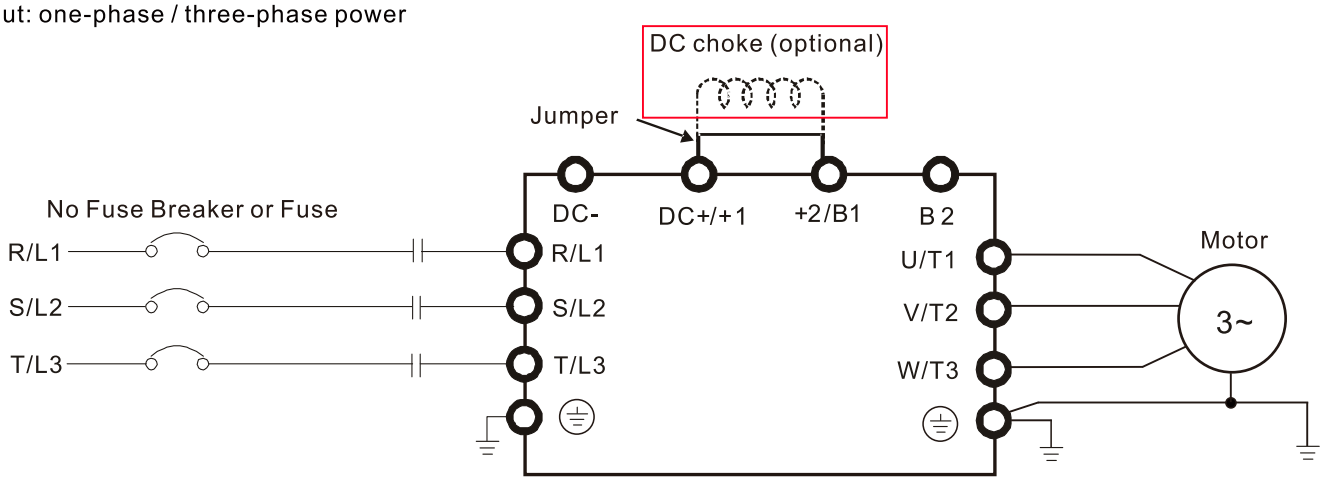

Figure 7-6

Reactor specification

115V, 50–60 Hz / One-Phase - Normal Duty

Model	Rated Current (Arms)	Saturation Current (Arms)	Intput AC / DC Reactor (mH)	Intput AC / DC reactor Delta part #	Output AC reactor (mH)	Output AC reactor Delta part #
VFD1A6ME11ANNAA VFD1A6ME11ANSAA	1.8	2.7	3.66	DR008D0366	2.54	DR005L0254
VFD2A5ME11ANNAA VFD2A5ME11ANSAA	2.7	4.05	2.66	DR011D0266	2.54	DR005L0254
VFD4A8ME11ANNAA VFD4A8ME11ANSAA	5.5	8.25	1.17	DR025D0117	1.59	DR008L0159

Table 7-10

115V, 50–60 Hz / One-Phase - Heavy Duty

Model	Rated Current (Arms)	Saturation Current (Arms)	Intput AC / DC Reactor (mH)	Intput AC / DC reactor Delta part #	Output AC reactor (mH)	Output AC reactor Delta part #
VFD1A6ME11ANSAA VFD1A6ME11ENSAA	1.6	3.2	3.66	DR008D0366	2.54	DR005L0254
VFD2A5ME11ANSAA VFD2A5ME11ENSAA	2.5	5	2.66	DR011D0266	2.54	DR005L0254
VFD4A8ME11ANSAA VFD4A8ME11ENSAA	5	9.6	1.17	DR025D0117	2.54	DR005L0254

Table 7-11

230V, 50–60 Hz / One-Phase - Normal Duty

Model	Rated Current (Arms)	Saturation Current (Arms)	Intput AC / DC Reactor (mH)	Intput AC / DC reactor Delta part #	Output AC reactor (mH)	Output AC reactor Delta part #
VFD0A8ME21ANNAA VFD0A8ME21AFNAA VFD0A8ME21ANSAA VFD0A8ME21AFSAA	1	1.5	5.857	DR005D0585	2.54	DR005L0254
VFD1A6ME21ANNAA VFD1A6ME21AFNAA VFD1A6ME21ANSAA VFD1A6ME21AFSAA	1.8	2.7	5.857	DR005D0585	2.54	DR005L0254
VFD2A8ME21ANNAA VFD2A8ME21AFNAA VFD2A8ME21ANSAA VFD2A8ME21AFSAA	3.2	4.8	3.66	DR008D0366	2.54	DR005L0254
VFD4A8ME21ANNAA VFD4A8ME21AFNAA VFD4A8ME21ANSAA VFD4A8ME21AFSAA	5	7.5	2.66	DR011D0266	2.54	DR005L0254
VFD7A5ME21ANNAA VFD7A5ME21AFNAA VFD7A5ME21ANSAA VFD7A5ME21AFSAA	8.5	12.75	1.72	DR017D0172	1.15	DR011L0115
VFD11AME21ANNAA VFD11AME21AFNAA VFD11AME21ANSAA VFD11AME21AFSAA	12.5	18.75	1.17	DR025D0117	0.746	DR017LP746

Table 7-12

230V, 50–60 Hz / One-Phase - Heavy Duty

Model	Rated Current (Arms)	Saturation Current (Arms)	Intput AC / DC Reactor (mH)	Intput AC / DC reactor Delta part #	Output AC reactor (mH)	Output AC reactor Delta part #
VFD0A8ME21ANNAA VFD0A8ME21AFNAA VFD0A8ME21ANSAA VFD0A8ME21AFSAA	0.8	1.6	5.857	DR005D0585	2.54	DR005L0254
VFD1A6ME21ANNAA VFD1A6ME21AFNAA VFD1A6ME21ANSAA VFD1A6ME21AFSAA	1.6	3.2	5.857	DR005D0585	2.54	DR005L0254
VFD2A8ME21ANNAA VFD2A8ME21AFNAA VFD2A8ME21ANSAA VFD2A8ME21AFSAA	2.8	5.6	3.66	DR008D0366	2.54	DR005L0254
VFD4A8ME21ANNAA VFD4A8ME21AFNAA VFD4A8ME21ANSAA VFD4A8ME21AFSAA	4.8	9.6	2.66	DR011D0266	2.54	DR005L0254
VFD7A5ME21ANNAA VFD7A5ME21AFNAA VFD7A5ME21ANSAA VFD7A5ME21AFSAA	7.5	15	1.72	DR017D0172	1.59	DR008L0159
VFD11AME21ANNAA VFD11AME21AFNAA VFD11AME21ANSAA VFD11AME21AFSAA	11	22	1.17	DR025D0117	1.15	DR011L0115

Table 7-13

230V, 50–60 Hz / Three-Phase - Normal Duty

Model	Rated Current (Arms)	Saturation Current (Arms)	Intput / Output AC Reactor (mH)	Intput AC reactor Delta part #	Outtput AC reactor Delta part #	DC Reactor (mH)	DC reactor Delta part #
VFD0A8ME23ANNAA VFD0A8ME23ANSAA	1	1.5	2.536	DR005A0254	DR005L0254	5.857	DR005D0585
VFD1A6ME23ANNAA VFD1A6ME23ANSAA	1.8	2.7	2.536	DR005A0254	DR005L0254	5.857	DR005D0585
VFD2A8ME23ANNAA VFD2A8ME23ANSAA	3.2	4.8	2.536	DR005A0254	DR005L0254	5.857	DR005D0585
VFD4A8ME23ANNAA VFD4A8ME23ANSAA	5	7.5	2.536	DR005A0254	DR005L0254	5.857	DR005D0585
VFD7A5ME23ANNAA VFD7A5ME23ANSAA	8	12	1.585	DR008A0159	DR008L0159	3.66	DR008D0366
VFD11AME23ANNAA VFD11AME23ANSAA	12.5	18.75	0.746	DR017AP746	DR017LP746	2.662	DR011D0266
VFD17AME23ANNAA VFD17AME23ANSAA	19.5	29.25	0.507	DR025AP507	DR025LP507	1.722	DR017D0172
VFD25AME23ANNAA VFD25AME23ANSAA	27	40.5	0.32	DR033AP320	DR033LP320	1.172	DR025D0117

Table 7-14

230V, 50–60 Hz / Three-Phase - Heavy Duty

Model	Rated Current (Arms)	Saturation Current (Arms)	Intput / Output AC Reactor (mH)	Intput AC reactor Delta part #	Outtput AC reactor Delta part #	DC Reactor (mH)	DC reactor Delta part #
VFD0A8ME23ANNAA VFD0A8ME23ANSAA	0.8	1.6	2.536	DR005A0254	DR005L0254	5.857	DR005D0585
VFD1A6ME23ANNAA VFD1A6ME23ANSAA	1.6	3.2	2.536	DR005A0254	DR005L0254	5.857	DR005D0585
VFD2A8ME23ANNAA VFD2A8ME23ANSAA	2.8	5.6	2.536	DR005A0254	DR005L0254	5.857	DR005D0585
VFD4A8ME23ANNAA VFD4A8ME23ANSAA	4.8	9.6	2.536	DR005A0254	DR005L0254	5.857	DR005D0585
VFD7A5ME23ANNAA VFD7A5ME23ANSAA	7.5	15	1.585	DR008A0159	DR008L0159	3.66	DR008D0366
VFD11AME23ANNAA VFD11AME23ANSAA	11	22	1.152	DR011A0115	DR011L0115	2.662	DR011D0266
VFD17AME23ANNAA VFD17AME23ANSAA	17	34	0.746	DR017AP746	DR017LP746	1.722	DR017D0172
VFD25AME23ANNAA VFD25AME23ANSAA	25	50	0.507	DR025AP507	DR025LP507	1.172	DR025D0117

Table 7-15

460V, 50–60 Hz / Three-Phase - Normal Duty

Model	Rated Current (Arms)	Saturation Current (Arms)	Intput / Output AC Reactor (mH)	Intput AC reactor Delta part #	Outtput AC reactor Delta part #	DC Reactor (mH)	DC reactor Delta part #
VFD1A5ME43ANNAA VFD1A5ME43AFNAA VFD1A5ME43ANSAA VFD1A5ME43AFSAA	1.8	2.7	8.102	DR003A0810	DR003L0810	18.709	DR003D1870

Model	Rated Current (Arms)	Saturation Current (Arms)	Intput / Output AC Reactor (mH)	Intput AC reactor Delta part #	Outtput AC reactor Delta part #	DC Reactor (mH)	DC reactor Delta part #
VFD2A7ME43ANNAA VFD2A7ME43AFNAA VFD2A7ME43ANSAA VFD2A7ME43AFSAA	3	4.5	6.077	DR004A0607	DR004L0607	18.709	DR003D1870
VFD4A2ME43ANNAA VFD4A2ME43AFNAA VFD4A2ME43ANSAA VFD4A2ME43AFSAA	4.6	6.9	4.05	DR006A0405	DR006L0405	14.031	DR004D1403
VFD5A5ME43ANNAA VFD5A5ME43AFNAA VFD5A5ME43ANSAA VFD5A5ME43AFSAA	6.5	9.75	2.7	DR009A0270	DR009L0270	9.355	DR006D0935
VFD7A3ME43ANNAA VFD7A3ME43AFNAA VFD7A3ME43ANSAA VFD7A3ME43AFSAA	8.9	13.35	2.7	DR009A0270	DR009L0270	6.236	DR009D0623
VFD9A0ME43ANNAA VFD9A0ME43AFNAA VFD9A0ME43ANSAA VFD9A0ME43AFSAA	10.5	15.75	2.315	DR010A0231	DR010L0231	5.345	DR010D0534
VFD13AME43ANNAA VFD13AME43AFNAA VFD13AME43ANSAA VFD13AME43AFSAA	15.7	23.55	1.174	DR018A0117	DR018L0117	3.119	DR018D0311
VFD17AME43ANNAA VFD17AME43AFNAA VFD17AME43ANSAA VFD17AME43AFSAA	20.5	30.75	0.881	DR024AP881	DR024LP881	3.119	DR018D0311

Table 7-16

460V, 50–60 Hz / Three-Phase - Heavy Duty

Model	Rated Current (Arms)	Saturation Current (Arms)	Intput / Output AC Reactor (mH)	Intput AC reactor Delta part #	Outtput AC reactor Delta part #	DC Reactor (mH)	DC reactor Delta part #
VFD1A5ME43ANNAA VFD1A5ME43AFNAA VFD1A5ME43ANSAA VFD1A5ME43AFSAA	1.5	3	8.102	DR003A0810	DR003L0810	18.709	DR003D1870
VFD2A7ME43ANNAA VFD2A7ME43AFNAA VFD2A7ME43ANSAA VFD2A7ME43AFSAA	2.7	5.4	8.102	DR003A0810	DR003L0810	18.709	DR003D1870
VFD4A2ME43ANNAA VFD4A2ME43AFNAA VFD4A2ME43ANSAA VFD4A2ME43AFSAA	4.2	8.4	6.077	DR004A0607	DR004L0607	14.031	DR004D1403
VFD5A5ME43ANNAA VFD5A5ME43AFNAA VFD5A5ME43ANSAA VFD5A5ME43AFSAA	5.5	11	4.05	DR006A0405	DR006L0405	9.355	DR006D0935
VFD7A3ME43ANNAA VFD7A3ME43AFNAA VFD7A3ME43ANSAA VFD7A3ME43AFSAA	8.1	16.2	2.7	DR009A0270	DR009L0270	6.236	DR009D0623
VFD9A0ME43ANNAA VFD9A0ME43AFNAA VFD9A0ME43ANSAA VFD9A0ME43AFSAA	9	18	2.7	DR009A0270	DR009L0270	6.236	DR009D0623

Model	Rated Current (Arms)	Saturation Current (Arms)	Intput / Output AC Reactor (mH)	Intput AC reactor Delta part #	Outtput AC reactor Delta part #	DC Reactor (mH)	DC reactor Delta part #
VFD13AME43ANNAA VFD13AME43AFNAA VFD13AME43ANSAA VFD13AME43AFSAA	13	26	1.174	DR018A0117	DR018L0117	4.677	DR012D0467
VFD17AME43ANNAA VFD17AME43AFNAA VFD17AME43ANSAA VFD17AME43AFSAA	17	34	1.174	DR018A0117	DR018L0117	3.119	DR018D0311

Table 7-17

The table below shows the THDi specification when using Deltas drives to work with AC/DC reactors.

current harmonics	Models without Built-in DC Reactors				Models with Built-in DC Reactors		
	No AC/DC Reactor	3% Input AC Reactor	5% Input AC Reactor	4% DC Reactor	No AC/DC Reactor	3% Input AC Reactor	5% Input AC Reactor
5th	73.3%	38.5%	30.8%	25.5%	31.16%	27.01%	25.5%
7th	52.74%	15.3%	9.4%	18.6%	23.18%	9.54%	8.75%
11th	7.28%	7.1%	6.13%	7.14%	8.6%	4.5%	4.2%
13th	0.4%	3.75%	3.15%	0.48%	7.9%	0.22%	0.17%
THDi	91%	43.6%	34.33%	38.2%	42.28%	30.5%	28.4%
Note	The THDi specification listed here assumes that there is 0.8% resistance (mains electricity) before the reactors and may be slightly different from the actual THDi, depending on the installation and environmental conditions (wires, motors).						

Table 7-18

Reactor dimension and specifications

AC input reactor dimension and specifications

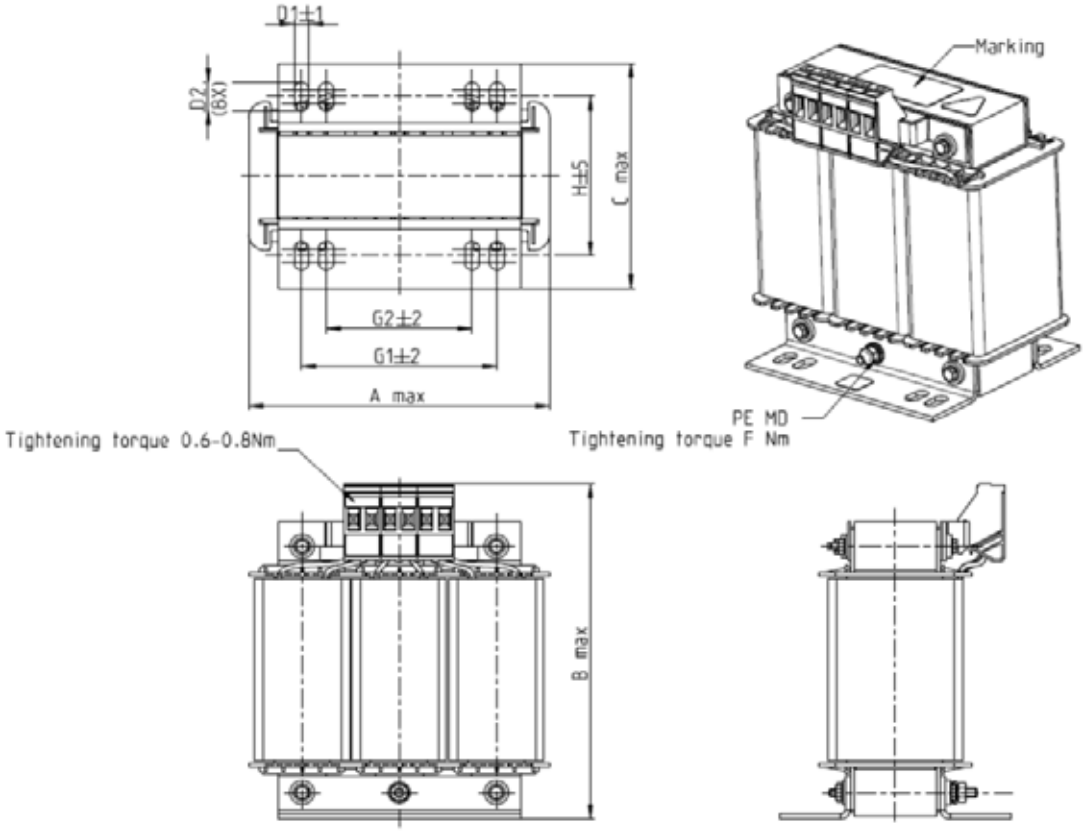

Figure 7-7

Unit: mm

Input AC reactor Delta part #	A	B	C	D1*D2	E	G1	G2	PE D
DR005A0254	100	115	65	6*9	45	60	40	M4
DR008A0159	100	115	65	6*9	45	60	40	M4
DR011A0115	130	135	95	6*12	60	80.5	60	M4
DR017AP746	130	135	100	6*12	65	80.5	60	M4

Table 7-19

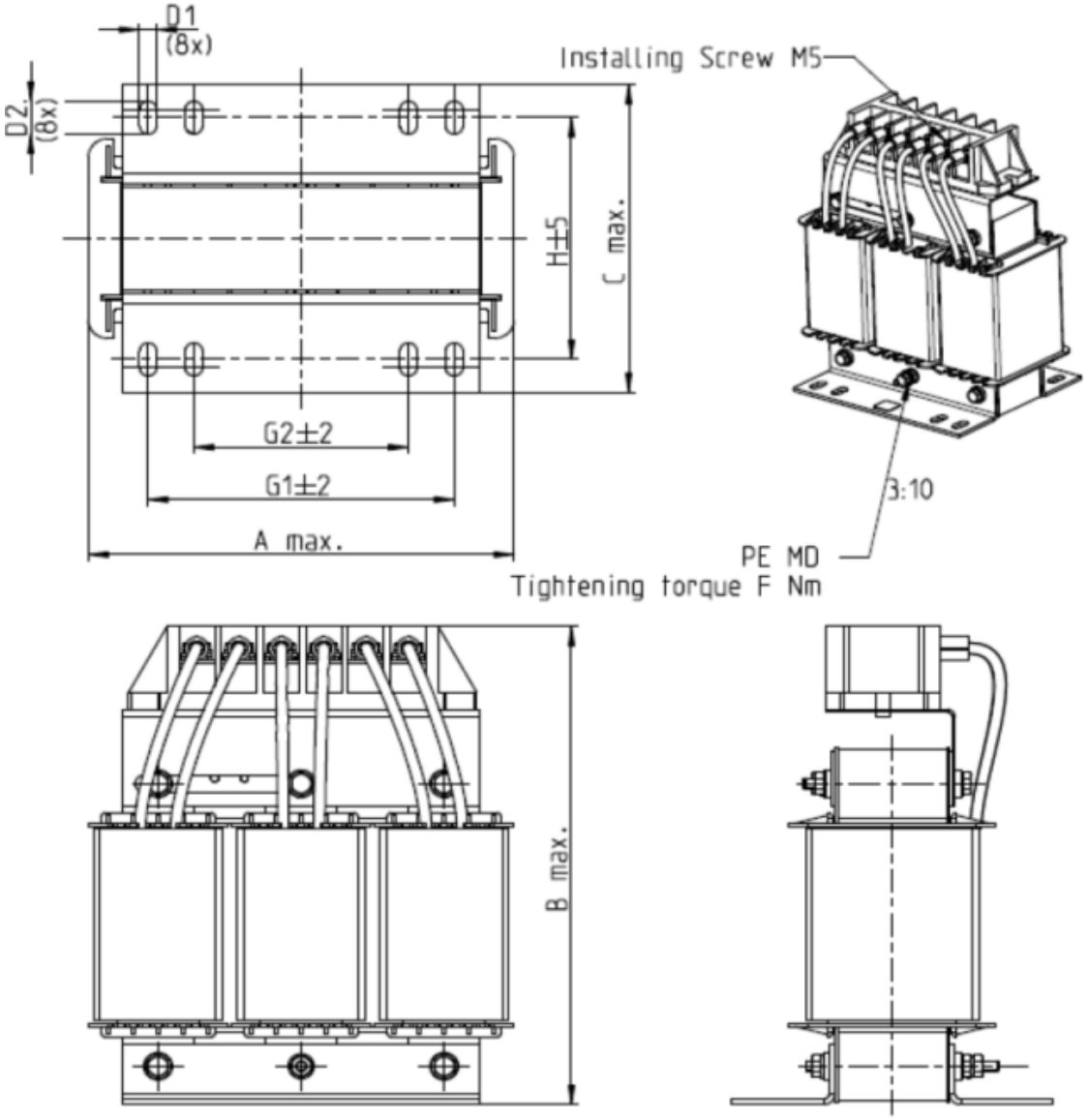

Figure 7-8

Unit: mm

Input AC reactor Delta part #	A	B	C	D1*D2	H	G1	G2	PE D
DR025AP507	130	195	100	6*12	65	80.5	60	M4

Table 7-20

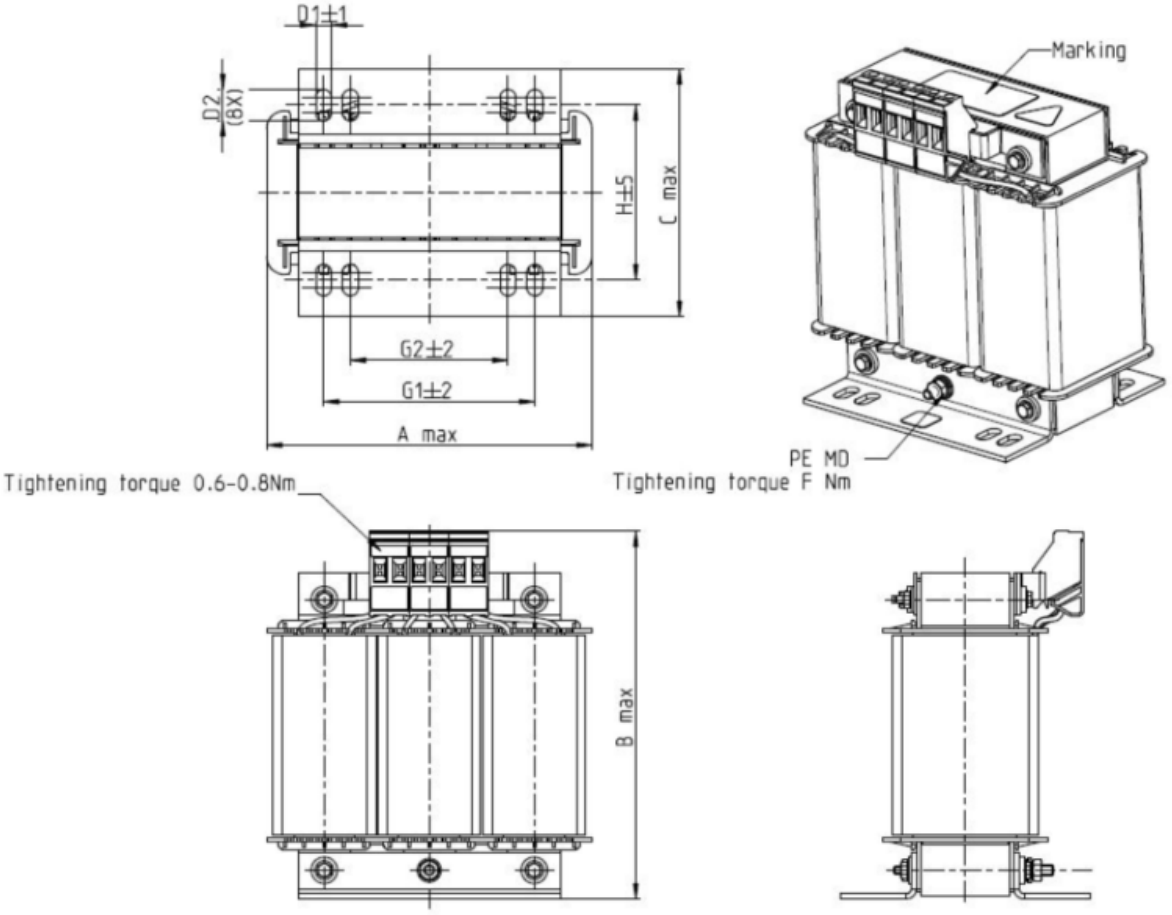

Figure 7-9

Unit: mm

Input AC reactor Delta part #	A	B	C	D1*D2	H	G1	G2	PE D
DR003A0810	100	125	65	6*9	43	60	40	M4
DR004A0607	100	125	65	6*9	43	60	40	M4
DR006A0405	130	15	95	6*12	60	80.5	60	M4
DR009A0270	160	160	105	6*12	75	107	75	M4
DR010A0231	160	160	115	6*12	90	107	75	M4
DR012A0202	160	160	115	6*12	90	107	75	M4
DR018A0117	160	160	115	6*12	90	107	75	M4

Table 7-21

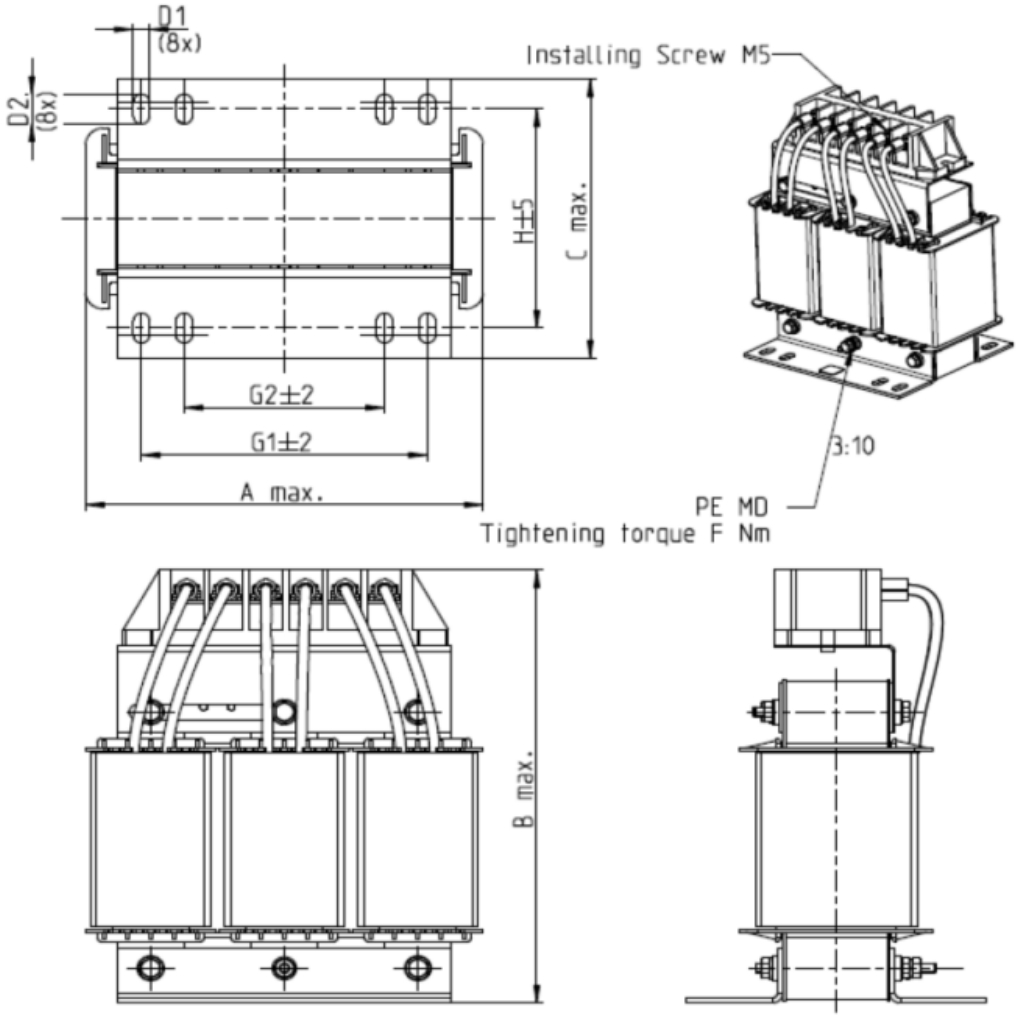

Figure 7-10

Unit: mm

Input AC reactor Delta part #	A	B	C	D1*D2	H	G1	G2	PE D
DR024AP881	160	175	115	6*12	90	107	75	M4

Table 7-22

AC output reactor dimension and specifications:

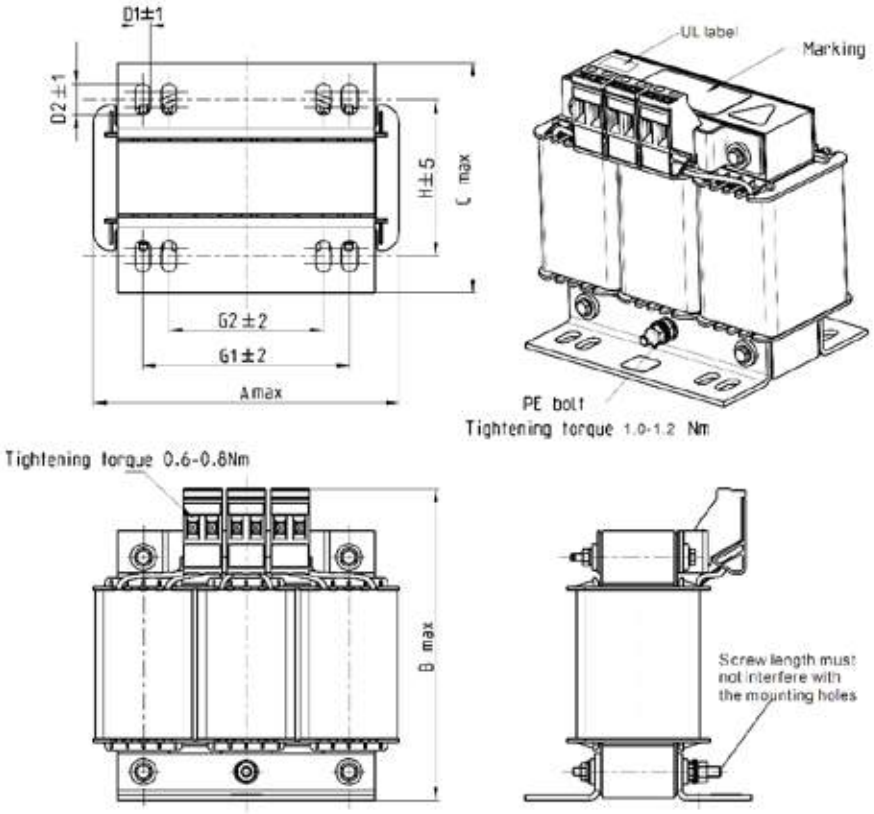

Figure 7-11

Unit: mm

Output AC reactor Delta part #	A	B	C	D1*D2	E	G1	G2	PE D
DR005L0254	96	110	70	6*9	42	60	40	M4
DR008L0159	120	135	96	6*12	60	80.5	60	M4
DR011L0115	120	135	96	6*12	60	80.5	60	M4
DR017LP746	120	135	105	6*12	65	80.5	60	M4
DR025LP507	150	160	120	6*12	88	107	75	M4

Table 7-23

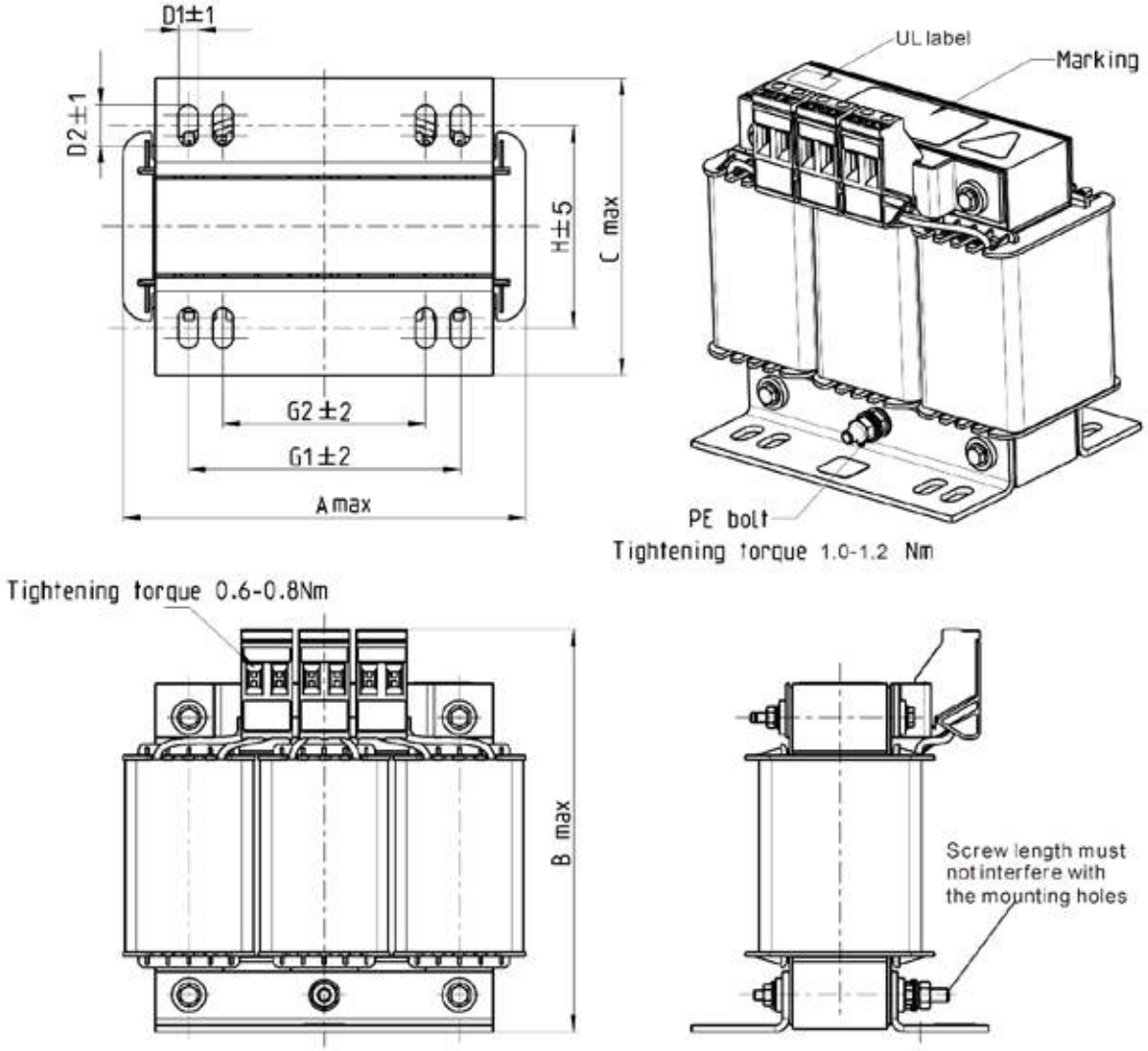

Figure 7-12

Unit: mm

Output AC reactor Delta part #	A	B	C	D1*D2	H	G1	G2	PE D
DR003L0810	96	115	65	6*9	42	60	40	M4
DR004L0607	120	135	95	6*12	60	80.5	60	M4
DR006L0405	120	135	95	6*12	60	80.5	60	M4
DR009L0270	150	160	100	6*12	74	107	75	M4
DR010L0231	150	160	115	6*12	88	107	75	M4
DR012L0202	150	160	115	6*12	88	107	75	M4
DR018L0117	150	160	115	6*12	88	107	75	M4
DR024LP881	150	160	115	6*12	88	107	75	M4

Table 7-24

DC reactor dimension and specification:

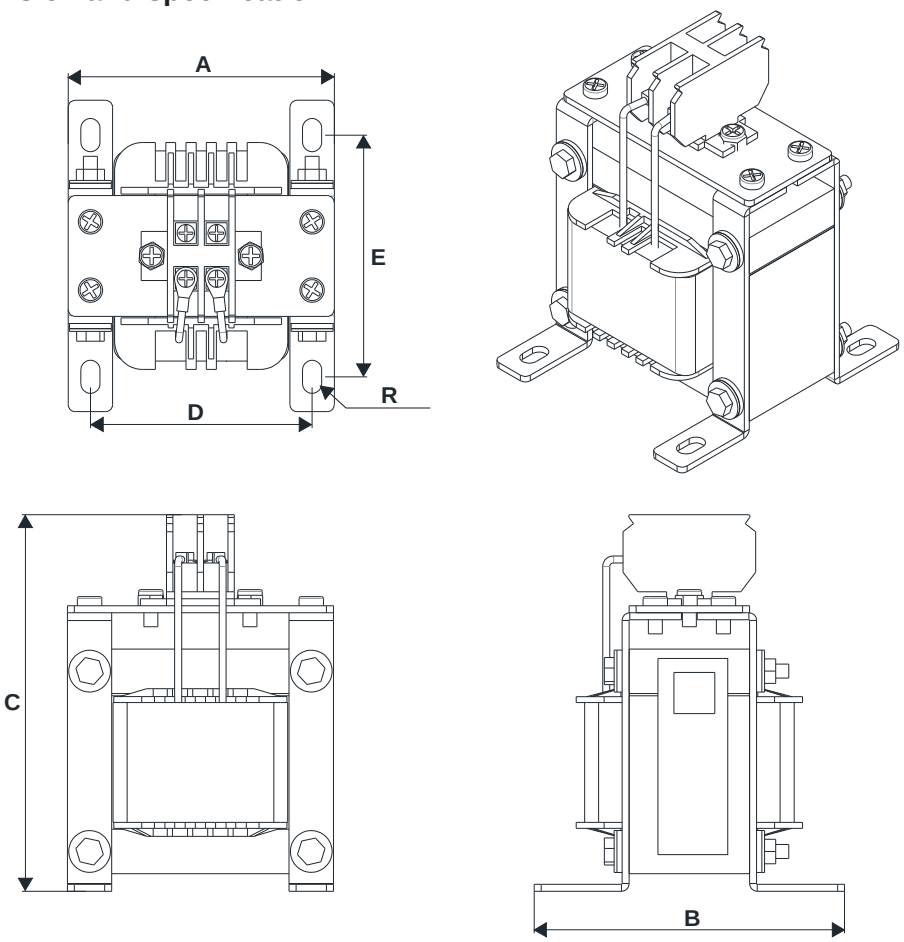

Figure 7-13

DC reactor Delta Part #	Rated Current (Arms)	Saturation current (Arms)	DC reactor (mH)	A (mm)	B (mm)	C (mm)	D (mm)	E (mm)	R (mm)
DR005D0585	5	8.64	5.857	79	78	112	64±2	56±2	9.5*5.5
DR008D0366	8	12.78	3.660	79	78	112	64±2	56±2	9.5*5.5
DR011D0266	11	18	2.662	79	92	112	64±2	69.5±2	9.5*5.5
DR017D0172	17	28.8	1.722	79	112	112	64±2	89.5±2	9.5*5.5
DR025D0117	25	43.2	1.172	99	105	128	79±2	82.5±2	9.5*5.5
DR033DP851	33	55.8	0.851	117	110	156	95±2	87±2	10*6.5
DR049DP574	49	84.6	0.574	117	120	157	95±2	97±2	10*6.5
DR065DP432	65	111.6	0.432	117	140	157	95±2	116.5±2	10*6.5
DR003D1870	3	5.22	18.709	79	78	112	64±2	56±2	9.5*5.5
DR004D1403	4	6.84	14.031	79	92	112	64±2	69.5±2	9.5*5.5
DR006D0935	6	10.26	9.355	79	92	112	64±2	69.5±2	9.5*5.5
DR009D0623	9	14.58	6.236	79	112	112	64±2	89.5±2	9.5*5.5
DR010D0534	10.5	17.1	5.345	99	93	128	79±2	70±2	9.5*5.5
DR012D0467	12	19.8	4.677	99	105	128	79±2	82.5±2	9.5*5.5
DR018D0311	18	30.6	3.119	117	110	144	95±2	87±2	10*6.5
DR024D0233	24	41.4	2.338	117	120	144	95±2	97±2	10*6.5

DC reactor Delta Part #	Rated Current (Arms)	Saturation current (Arms)	DC reactor (mH)	A (mm)	B (mm)	C (mm)	D (mm)	E (mm)	R (mm)
DR032D0175	32	54	1.754	117	140	157	95±2	116.5±2	10*6.5
DR038D0147	38	64.8	1.477	136	135	172	111±2	112±2	10*6.5
DR045D0124	45	77.4	1.247	136	135	173	111±2	112±2	10*6.5

Table 7-25

Length of the Motor Cable

1. Leakage current affects the motor and remedies

   Due to larger parasitic capacitances in longer motor cables, longer cables increase the leakage current. This can activate the over-current protection and display the incorrect current. In the worst case, it can damage the drive. If more than one motor is connected to the AC motor drive, the total motor cable length is the sum of the cable length from AC motor drive to each motor.

   For 460V models AC motor drives, when an overload relay is installed between the drive and the motor to protect the motor from overheating, the connecting cable must be shorter than 50 m. However, the overload relay could still malfunction. To prevent this, install an AC output reactor (optional) to the drive and/or lower the carrier frequency setting (Pr.00-17).

2. Surge voltage affects the motor and remedies

   When a PWM signal from an AC motor drive drives the motor, the motor terminals can easily experience surge voltages (dv/dt) due to IGBT switching and cable capacitance. When the motor cable is very long (especially for the 460V models), surge voltages (dv/dt) may reduce motor insulation quality. To prevent this situation, follow the rules listed below.

   (1) Use a motor with enhanced insulation.
   (2) Connect an output reactor (optional) to the output terminals of the AC motor drive.
   (3) Reduce the motor cable length to the values in the table below.

The suggested motor shielded cable length in the following table complies with IEC 60034-17, which is suitable for motors with a rated voltage ≤ 500 V_{AC} and with an insulation level of ≥ 1.35 kV_{p-p}.

115V One-phase

Model	Normal Duty Rated Current (Arms)	Without AC reactor		With AC reactor	
		Shielded Cable (meter)	Non-shielded cable (meter)	Shielded Cable (meter)	Non-shielded cable (meter)
VFD0A8ME11ANNAA VFD0A8ME11ANSAA	1	50	75	75	115
VFD1A6ME11ANNAA VFD1A6ME11ANSAA	1.8				
VFD2A5ME11ANNAA VFD2A5ME11ANSAA	2.7				
VFD4A8ME11ANNAA VFD4A8ME11ANSAA	5.5				

Table 7-26

230V One-phase

Model	Normal Duty Rated Current (Arms)	Without AC reactor		With AC reactor	
		Shielded Cable (meter)	Non-shielded cable (meter)	Shielded Cable (meter)	Non-shielded cable (meter)
VFD0A8ME21ANNAA VFD0A8ME21AFNAA VFD0A8ME21ANSAA VFD0A8ME21AFSAA	1	50	75	75	115
VFD1A6ME21ANNAA VFD1A6ME21AFNAA VFD1A6ME21ANSAA VFD1A6ME21AFSAA	1.8				
VFD2A8ME21ANNAA VFD2A8ME21AFNAA VFD2A8ME21ANSAA VFD2A8ME21AFSAA	3.2				
VFD4A8ME21ANNAA VFD4A8ME21AFNAA VFD4A8ME21ANSAA VFD4A8ME21AFSAA	5	50	75	75	115
VFD7A5ME21ANNAA VFD7A5ME21AFNAA VFD7A5ME21ANSAA VFD7A5ME21AFSAA	8.5				
VFD11AME21ANNAA VFD11AME21AFNAA VFD11AME21ANSAA VFD11AME21AFSAA	12.5				

Table 7-27

230V Three-phase

Model	Normal Duty Rated Current (Arms)	Without AC reactor		With AC reactor	
		Shielded Cable (meter)	Non-shielded cable (meter)	Shielded Cable (meter)	Non-shielded cable (meter)
VFD0A8ME23ANNAA VFD0A8ME23ANSAA	1	50	75	75	115
VFD1A6ME23ANNAA VFD1A6ME23ANSAA	1.8				
VFD2A8ME23ANNAA VFD2A8ME23ANSAA	3.2				
VFD4A8ME23ANNAA VFD4A8ME23ANSAA	5				
VFD7A5ME23ANNAA VFD7A5ME23ANSAA	8				
VFD11AME23ANNAA VFD11AME23ANSAA	12.5				
VFD17AME23ANNAA VFD17AME23ANSAA	19.5				
VFD25AME23ANNAA VFD25AME23ANSAA	27				

Table 7-28

460V Three-phase

Model	Normal Duty Rated Current (Arms)	Without AC reactor		With AC reactor	
		Shielded Cable (meter)	Non-shielded cable (meter)	Shielded Cable (meter)	Non-shielded cable (meter)
VFD1A5ME43ANNAA VFD1A5ME43AFNAA VFD1A5ME43ANSAA VFD1A5ME43AFSAA	1.8	35	50	50	90
VFD2A7ME43ANNAA VFD2A7ME43AFNAA VFD2A7ME43ANSAA VFD2A7ME43AFSAA	3				
VFD4A2ME43ANNAA VFD4A2ME43AFNAA VFD4A2ME43ANSAA VFD4A2ME43AFSAA	4.6				
VFD5A5ME43ANNAA VFD5A5ME43AFNAA VFD5A5ME43ANSAA VFD5A5ME43AFSAA	6.5	50	75	75	115
VFD9A0ME43ANNAA VFD9A0ME43AFNAA VFD9A0ME43ANSAA VFD9A0ME43AFSAA	10.5	50	75	75	115
VFD13AME43ANNAA VFD13AME43AFNAA VFD13AME43ANSAA VFD13AME43AFSAA	15.7				
VFD17AME43ANNAA VFD17AME43AFNAA VFD17AME43ANSAA VFD17AME43AFSAA	20.5	100	150	150	225

Table 7-29

7-5 Zero Phase Reactors

You can also suppress interference by installing a zero phase reactor at the main input or the motor output of the drive, depending on the location of the interference. Delta provides two types of zero phase reactors to solve interference problems.

1. Casing with mechanical fixed part

This solution is for the main input/motor output side and can withstand higher loading, and be used at higher frequencies. You can get higher impedance by increasing the number of turns.

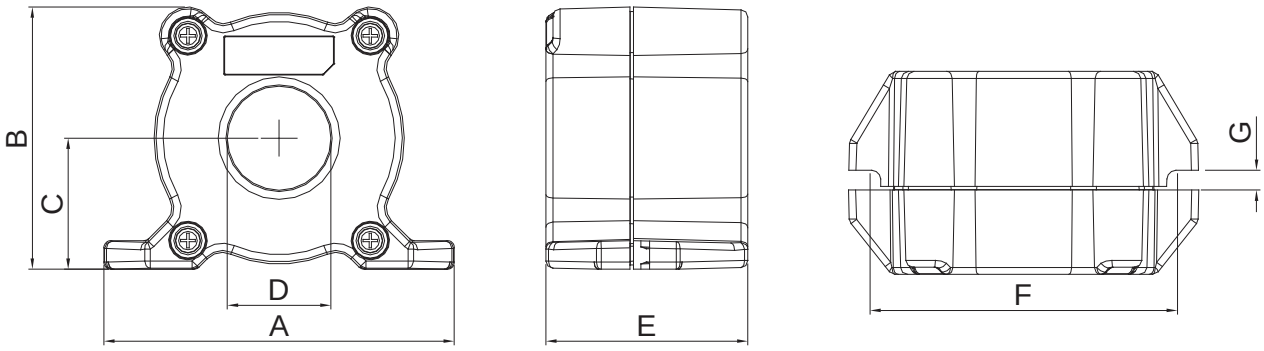

Figure 7-14

Unit: mm

Model	A	B	C	D	E	F	G(Ø)	To use w/
RF008X00A	99	73	36.5	29	56.5	86	5.5	Motor cable

Table 7-30

2. Casing without mechanical fixed part

This solution has higher performance: high initial magnetic permeability, high saturation induction density, low iron loss and perfect temperature characteristic. If the zero phase reactor does not need to be fixed mechanically, use this solution.

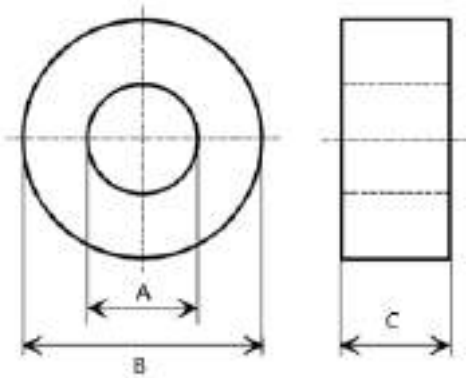

Figure 7-15

Unit: mm

Model	A	B	C	To use w/
T60006L2040W453	22.5	43.1	18.5	Motor cable
T60006L2050W565	36.3	53.5	23.4	Motor cable
T60004L2016W620	10.7	17.8	8.0	Motor cable
T60004L2025W622	17.5	27.3	12.3	Motor cable

Table 7-31

Installation

During installation, pass the cable through at least one zero phase reactor.

Use a suitable cable type (insulation class and wire section) so that the cable passes easily through the zero phase reactor. Do not pass the grounding cable through the zero phase reactor; only pass the motor wire through the zero phase reactor.

With longer motor cables the zero phase reactor can effectively reduce interference at the motor output. Install the zero phase reactor as close to the output of the drive as possible. Figure below shows the installation diagram for a single turn zero phase reactor. If the wire diameter allows several turns, multi-turn zero phase reactor shows the installation. The more turns, the better the noise suppression effect.

Single turn wiring diagram for a shielding wire with a zero phase reactor

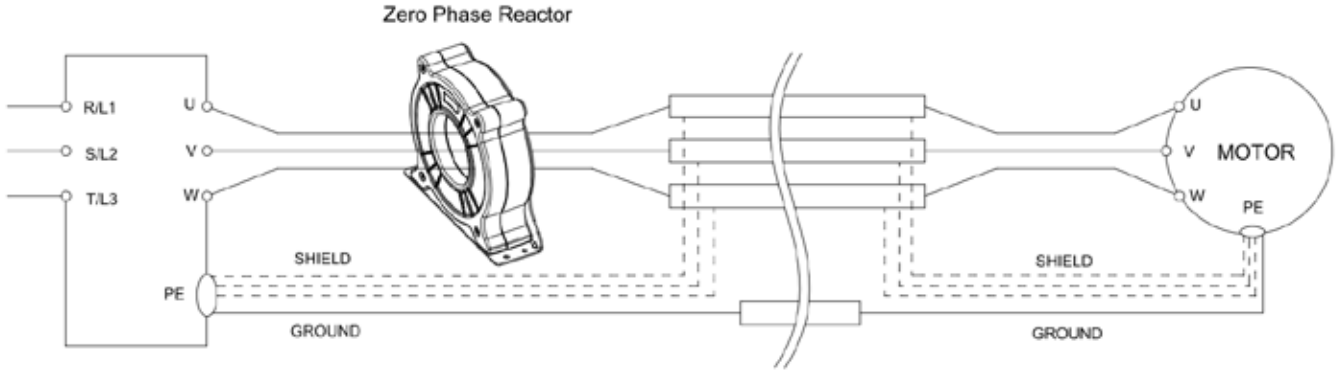

Figure 7-16

Multi-turn zero phase reactor

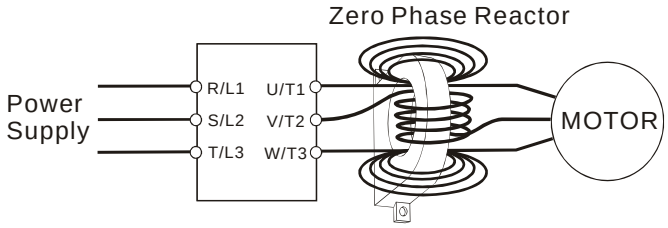

Figure 7-17

Installation notes

Install the zero phase reactor at the output terminal of the frequency converter (U.V.W.). After the zero phase reactor is installed, it reduces the electromagnetic radiation and load stress emitted by the wiring of the frequency converter. The number of zero phase reactors required for the drive depends on the wiring length and the drive voltage.

The normal operating temperature of the zero phase reactor should be lower than 85°C (176°F). However, when the zero phase reactor is saturated, its temperature may exceed 85°C (176°F). In this case, increase the number of zero phase reactors to avoid saturation. The following are reasons that might cause saturation of the zero phase reactors: the drive wiring is too long, the drive has several sets of loads, the wiring is in parallel, or the drive uses high capacitance wiring. If the temperature of the zero phase reactor exceeds 85°C (176°F) during the operation of the drive, increase the number of zero phase reactors.

Recommended maximum wiring gauge when installing zero phase reactor

Model # of Zero Phase Reactor	Max. Wire Gauge or LUG Width	Max. Wire Gauge AWG (1C*3)		Max. Wire Gauge AWG (1C*4)	
		75°C	90°C	75°C	90°C
RF008X00A	13 mm	3 AWG	1 AWG	3 AWG	1 AWG
T600006L2040W453	11 mm	9 AWG	4 AWG	6 AWG	6 AWG
T600006L2050W565	16 mm	1 AWG	2/0 AWG	1 AWG	1/0 AWG

Table 7-32

Zero Phase Reactor for Signal Cable

To solve interference problems between signal cables and electric devices, install a zero phase reactor on the signal cable. Install it on the signal cable which is the source of the interference to suppress the noise for a better signal. The model names and dimensions are listed in the table below.

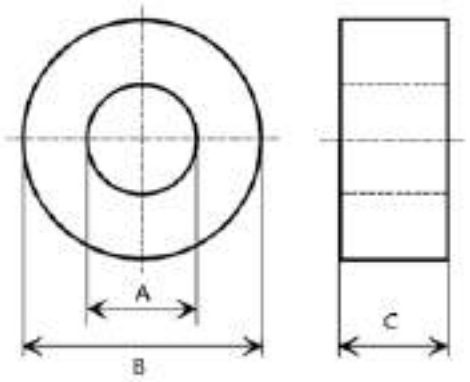

Figure 7-18

Unit: mm

Model	A	B	C
T60004L2016W620	10.7	17.8	8.0
T60004L2025W622	17.5	27.3	12.3

Table 7-33

7-6 EMC Filter

Use EMC filters to enhance the EMC performance for the environment and machines and to comply with EMC regulations, further reducing EMC problems. If you purchase a motor drive without a built-in EMC filter, it is recommended that you select the EMC filters as shown below

Frame	Model #	Input Current (A)	Filter model #	Recommended model of zero phase reactor		Conducted emission				Radiated emission		
						C1-motor cable length-30m			C2-motor cable length-100m	C2-motor cable length-100m		
						Position to place zero phase reactor						
				DELTA	VAC®	*1	*2	*3	N/A	*1	*2	*3
A	VFD0A8ME11ANNAA VFD0A8ME11ANSAA	3.7	EMF11AM21A	RF008X00A	T60006L2040W453				NA			
	VFD1A6ME11ANNAA VFD1A6ME11ANSAA	6.8							NA			
	VFD2A5ME11ANNAA VFD2A5ME11ANSAA	10.1							NA			
	VFD0A8ME21ANNAA VFD0A8ME21ANSAA	3.2							NA			
	VFD1A6ME21ANNAA VFD1A6ME21ANSAA	3.8					✓	✓	NA		✓	✓
	VFD2A8ME21ANNAA VFD2A8ME21ANSAA	6.7					✓	✓	NA		✓	✓
	VFD0A8ME23ANNAA VFD0A8ME23ANSAA	1.2	EMF10AM23A				✓	✓	NA		✓	✓
	VFD1A6ME23ANNAA VFD1A6ME23ANSAA	2.2					✓	✓	NA		✓	✓
	VFD2A8ME23ANNAA VFD2A8ME23ANSAA	3.8					✓	✓	NA		✓	✓
	VFD4A8ME23ANNAA VFD4A8ME23ANSAA	6					✓	✓	NA		✓	✓
	VFD1A5ME43ANNAA VFD1A5ME43ANSAA	2.5	EMF6A0M43A					✓	NA			✓
	VFD2A7ME43ANNAA VFD2A7ME43ANSAA	4.2						✓	NA			✓
B	VFD4A8ME21ANNAA VFD4A8ME21ANSAA	10.5	EMF11AM21A				✓	✓	NA		✓	✓
	VFD7A5ME23ANNAA VFD7A5ME23ANSAA	9.6	EMF10AM23A				✓	✓	NA		✓	✓
	VFD4A2ME43ANNAA VFD4A2ME43ANSAA	6.4	EMF6A0M43A					✓	NA			✓
C	VFD4A8ME11ANNAA VFD4A8ME11ANSAA	20.6	EMF27AM21B	RF008X00A	T60006L2040W453				NA			
	VFD11AME21ANNAA VFD11AME21ANSAA	26.3	EMF27AM21B					✓	NA			✓
	VFD7A5ME21ANNAA VFD7A5ME21ANSAA	17.9	EMF27AM21B					✓	NA			✓
	VFD11AME23ANNAA VFD11AME23ANSAA	15	EMF24AM23B				✓	✓	NA		✓	✓
	VFD17AME23ANNAA VFD17AME23ANSAA	23.4	EMF24AM23B				✓	✓	NA		✓	✓
	VFD5A5ME43ANNAA VFD5A5ME43ANSAA	7.2	EMF12AM43B						NA			
	VFD7A3ME43ANNAA VFD7A3ME43ANSAA	8.9	EMF12AM43B				✓	✓	NA		✓	✓
	VFD9A0ME43ANNAA VFD9A0ME43ANSAA	11.6	EMF12AM43B				✓	✓	NA		✓	✓
D	VFD25AME23ANNAA VFD25AME23ANSAA	32.4	EMF33AM23B	RF008X00A	T60006L2050W565	✓	✓		NA	✓	✓	
	VFD13AME43ANNAA VFD13AME43ANSAA	17.3	EMF23AM43B			✓	✓	✓	NA	✓	✓	✓
	VFD17AME43ANNAA VFD17AME43ANSAA	22.6	EMF23AM43B			✓	✓	✓	NA	✓	✓	✓

Table 7-34

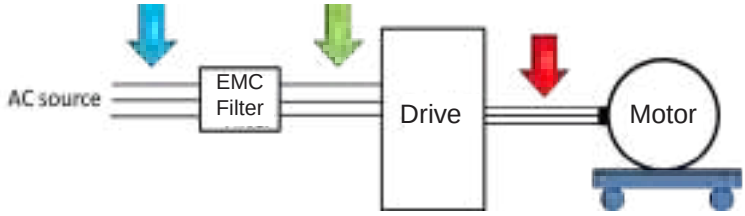

Figure 7-19

Filter Dimension

Frame A

EMF11AM21A

EMF10AM23A

EMF6A0M43A

Screw	Torque
M5 * 2	16–18 kg-cm / [13.9–17.3 lb-in.] / [1.56–1.96 Nm]
M4 * 2	14–16 kg-cm / [12.2–13.8 lb-in.] / [1.38–1.56 Nm]

Table 7-35

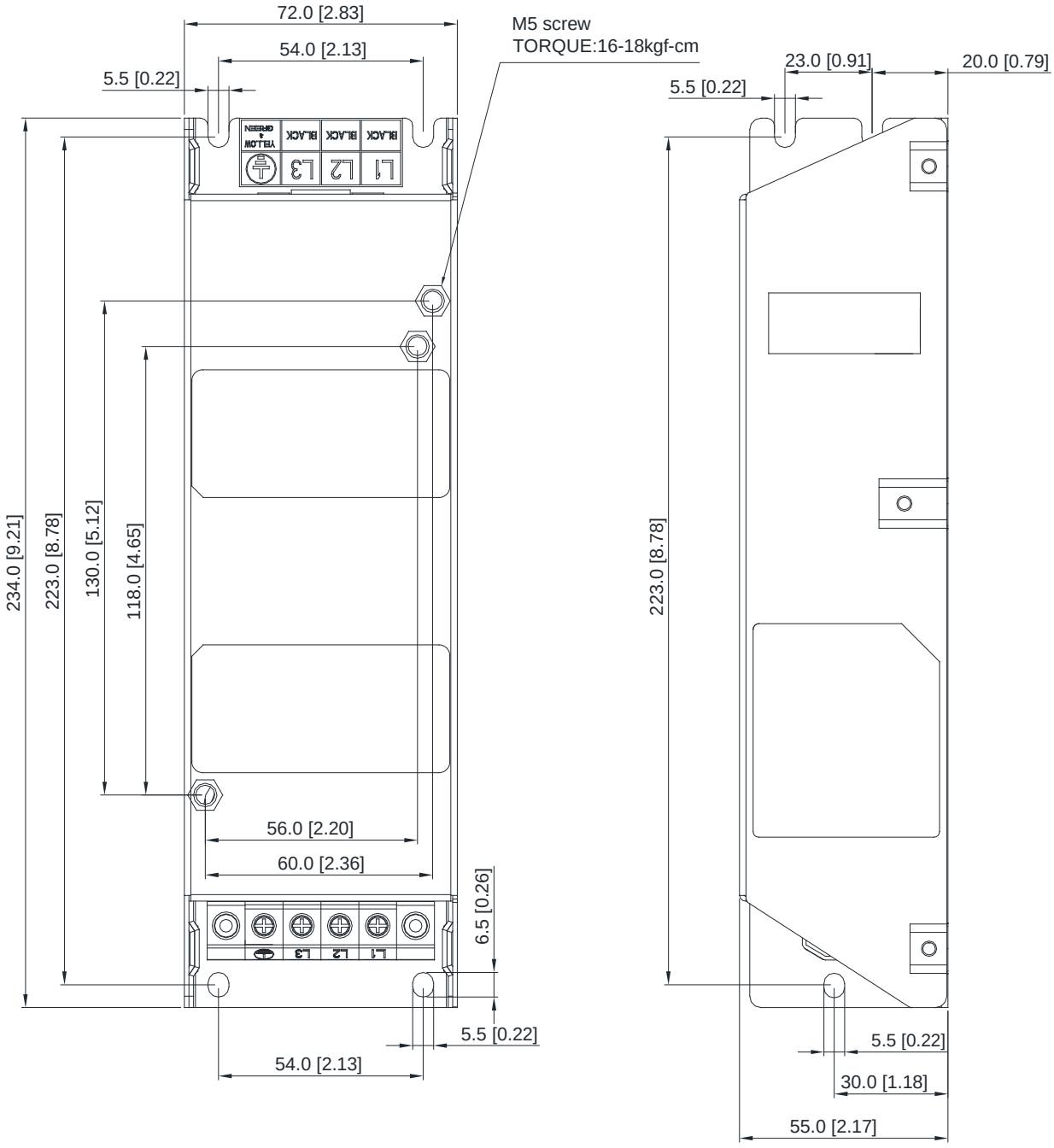

Unit: mm [inch]

Figure 7-20

Frame B

EMF27AM21B; EMF24AM23B

EMF33AM23B; EMF12AM43B

EMF23AM43B

Screw	Torque
M5 * 4	16–18 kg-cm / [13.9–17.3 lb-in.] / [1.56–1.96 Nm]

Table 7-36

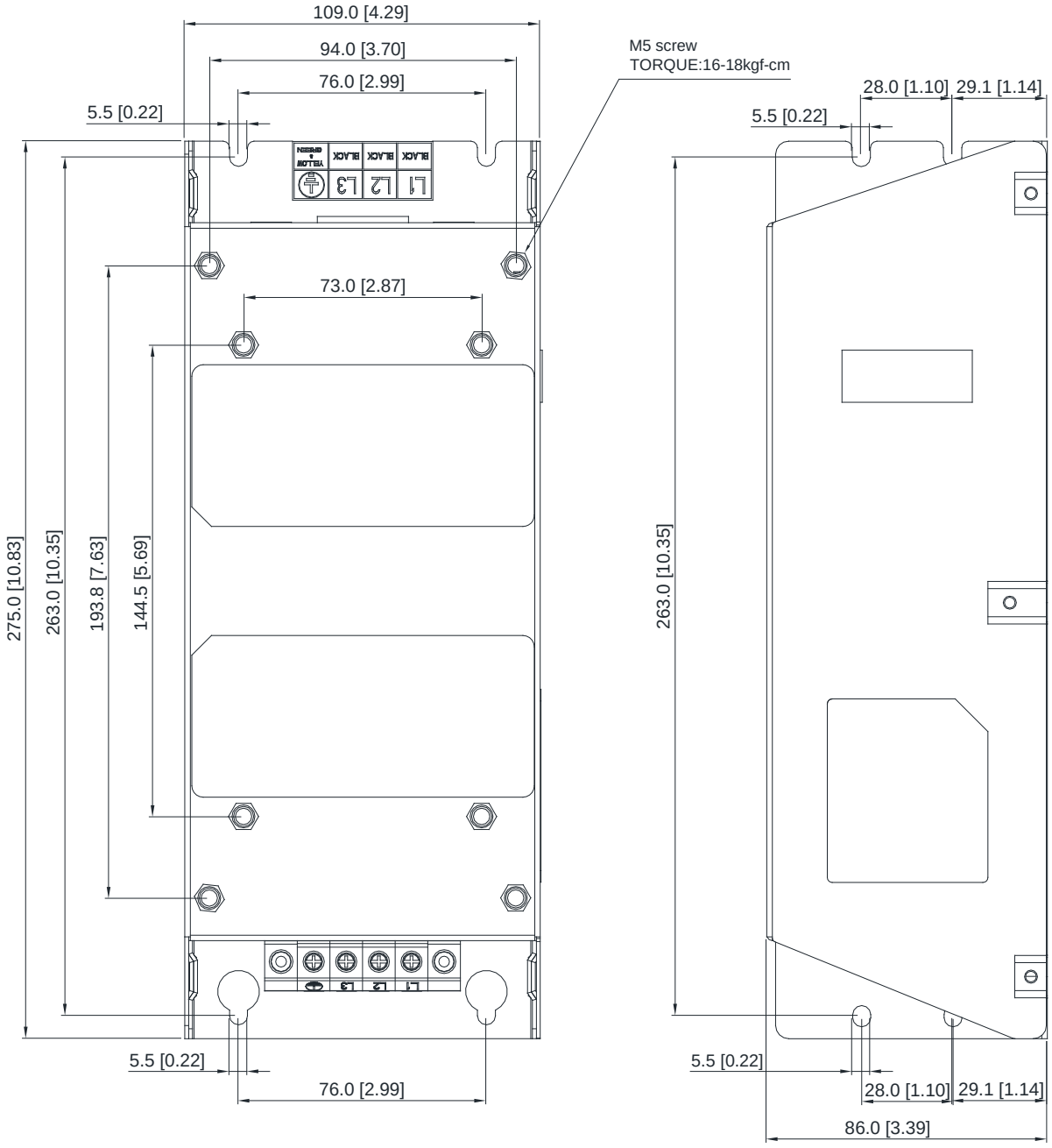

Unit: mm [inch]

Figure 7-21

The table below is the maximum shielded cable length for drive models with built-in EMC filters. You can choose the corresponding shielded cable length according to the required noise emission and electromagnetic interference class.

<table>
<tr><th colspan="2" rowspan="2">Drive Models with Built-in Filters</th><th rowspan="2">Rated Current (HD)</th><th colspan="2">Compliance with EMC (IEC 61800-3) Class C3</th><th colspan="2">Compliance with EMC (IEC 61800-3) Class C2</th></tr>
<tr><th>Shielded Cable Length</th><th>Fc</th><th>Shielded Cable Length</th><th>Fc</th></tr>
<tr><td rowspan="6">B</td><td>VFD0A8ME21AFSAA</td><td>0.8</td><td rowspan="17">30m</td><td rowspan="17">4kHz</td><td rowspan="4">20m</td><td rowspan="17">4kHz</td></tr>
<tr><td>VFD1A6ME21AFSAA</td><td>1.6</td></tr>
<tr><td>VFD2A8ME21AFSAA</td><td>2.8</td></tr>
<tr><td>VFD4A8ME21AFSAA</td><td>4.8</td></tr>
<tr><td rowspan="3">VFD1A5ME43AFSAA</td><td rowspan="3">1.5</td><td rowspan="3">-</td></tr>
<tr><td rowspan="3">VFD2A7ME43AFSAA</td><td rowspan="3">2.7</td></tr>
<tr><td rowspan="3">VFD4A2ME43AFSAA</td><td rowspan="3">4.2</td></tr>
<tr><td rowspan="4">C</td><td>VFD7A5ME21AFSAA</td><td>7.5</td><td rowspan="2">20m</td></tr>
<tr><td>VFD11AME21AFSAA</td><td>11</td></tr>
<tr><td>VFD5A5ME43AFSAA</td><td>5.5</td><td rowspan="3">-</td></tr>
<tr><td>VFD9A0ME43AFSAA</td><td>9</td></tr>
<tr><td rowspan="2">D</td><td>VFD13AME43AFSAA</td><td>13</td></tr>
<tr><td>VFD17AME43AFSAA</td><td>17</td></tr>
</table>

Table 7-37

7-7 EMC Shield Plate

EMC Shield Plate (for use with shielded cable)

Frame	Model of EMC Shield Plate	Reference figure
A	MKM-EPA	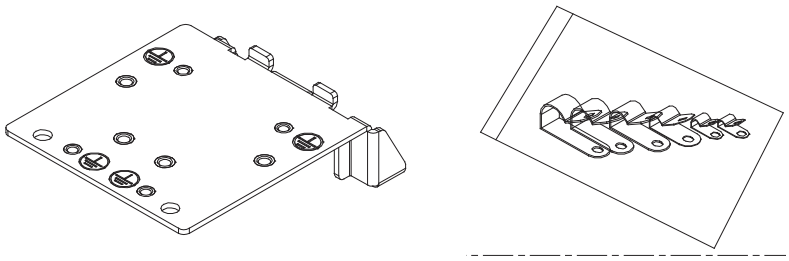 Figure 7-22
B	MKM-EPB	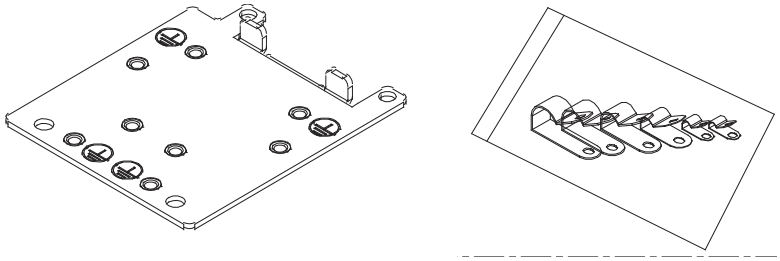 Figure 7-23
C	MKM-EPC	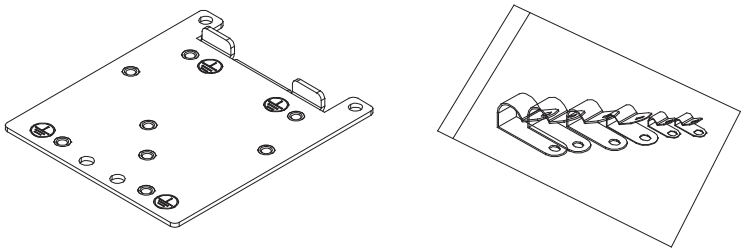 Figure 7-24
D	MKM-EPD	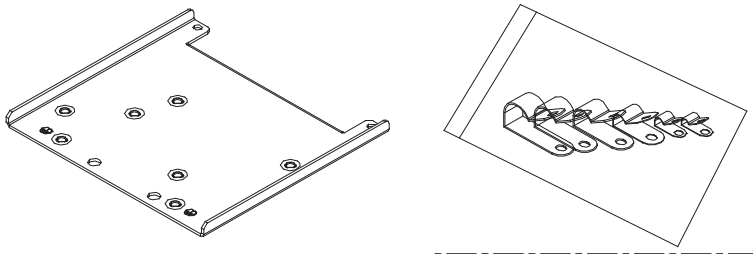 Figure 7-25

Table 7-38

Installation

(Frame A model as an example)

1. As shown on the right figures, fix the iron plate on the AC motor drive.

   Torque value:

Frame	Screw	Torque
A	M3.5	6–8 kg-cm / [5.2–6.9 lb-in.] / [0.59–0.78 Nm]
B	M4	6–8 kg-cm / [5.2–6.9 lb-in.] / [0.59–0.78 Nm]
C	M4	6–8 kg-cm / [5.2–6.9 lb-in.] / [0.59–0.78 Nm]
D	M3	4–6 kg-cm / [3.5–5.2 lb-in.] / [0.39–0.59 Nm]

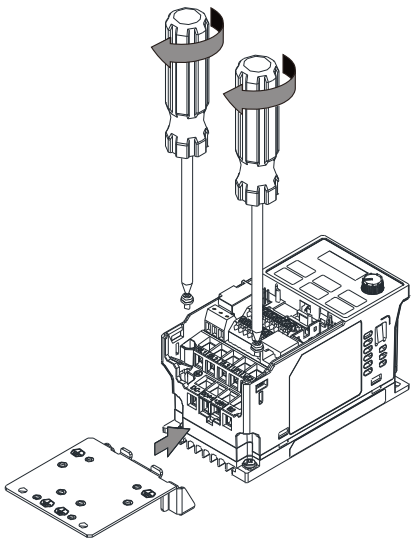

Figure 7-26

2. After selecting a suitable R-clip according to the wire gauge used, fix the R-clip on the shield plate.

Screw	Torque
M4	6–8 kg-cm / [5.2–6.9 lb-in.] / [0.59–0.78 Nm]

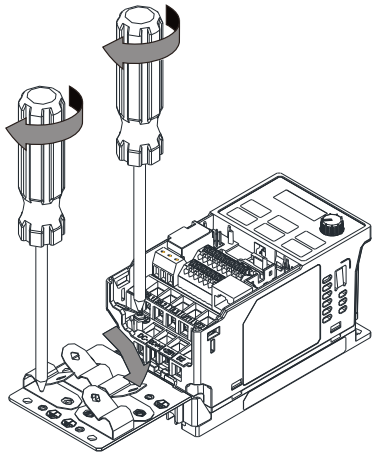

Figure 7-27

Table 7-39

Dimensions of EMC Shield Plate

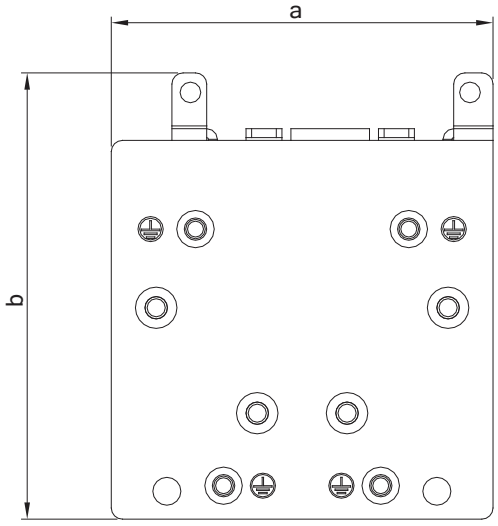

Figure 7-28

Model	Dimensions of Shield Plate mm [inch]	
	a	b
MKM-EPA	69.3 [2.73]	80.0 [3.15]
MKM-EPB	67.7 [2.67]	79.7 [3.14]
MKM-EPC	78.0 [3.07]	91.0 [3.58]
MKM-EPD	103.4 [4.07]	97.0 [3.82]

Table 7-40

Recommended wire mounting method

Frame	Model of EMC Shield Plate	Reference figure
A	MKM-EPA	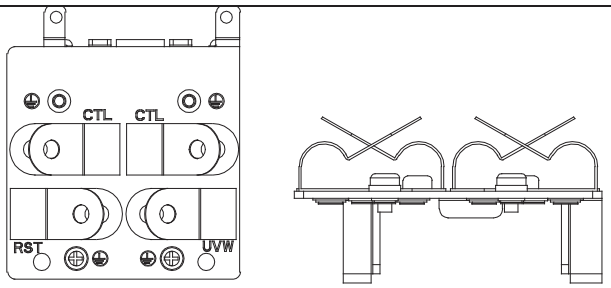 Figure 7-29
B	MKM-EPB	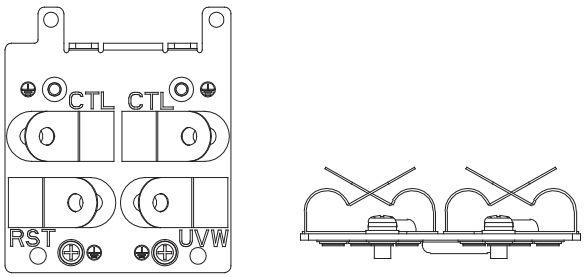 Figure 7-30
C	MKM-EPC	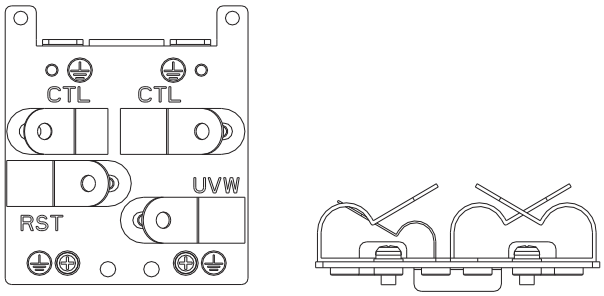 Figure 7-31
D	MKM-EPD	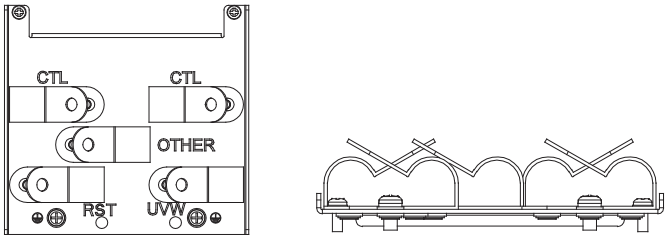 Figure 7-32

Table 7-41

7-8 Capacitive Filter

Installation diagram:

The capacitive filter (CXY101-43A) is a simple filter that supports basic filtering and noise interference reduction.

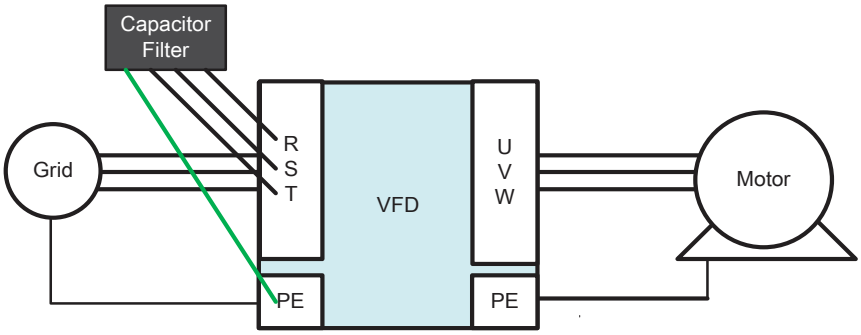

Figure 7-33

Capacitive filter and drive wiring figure:

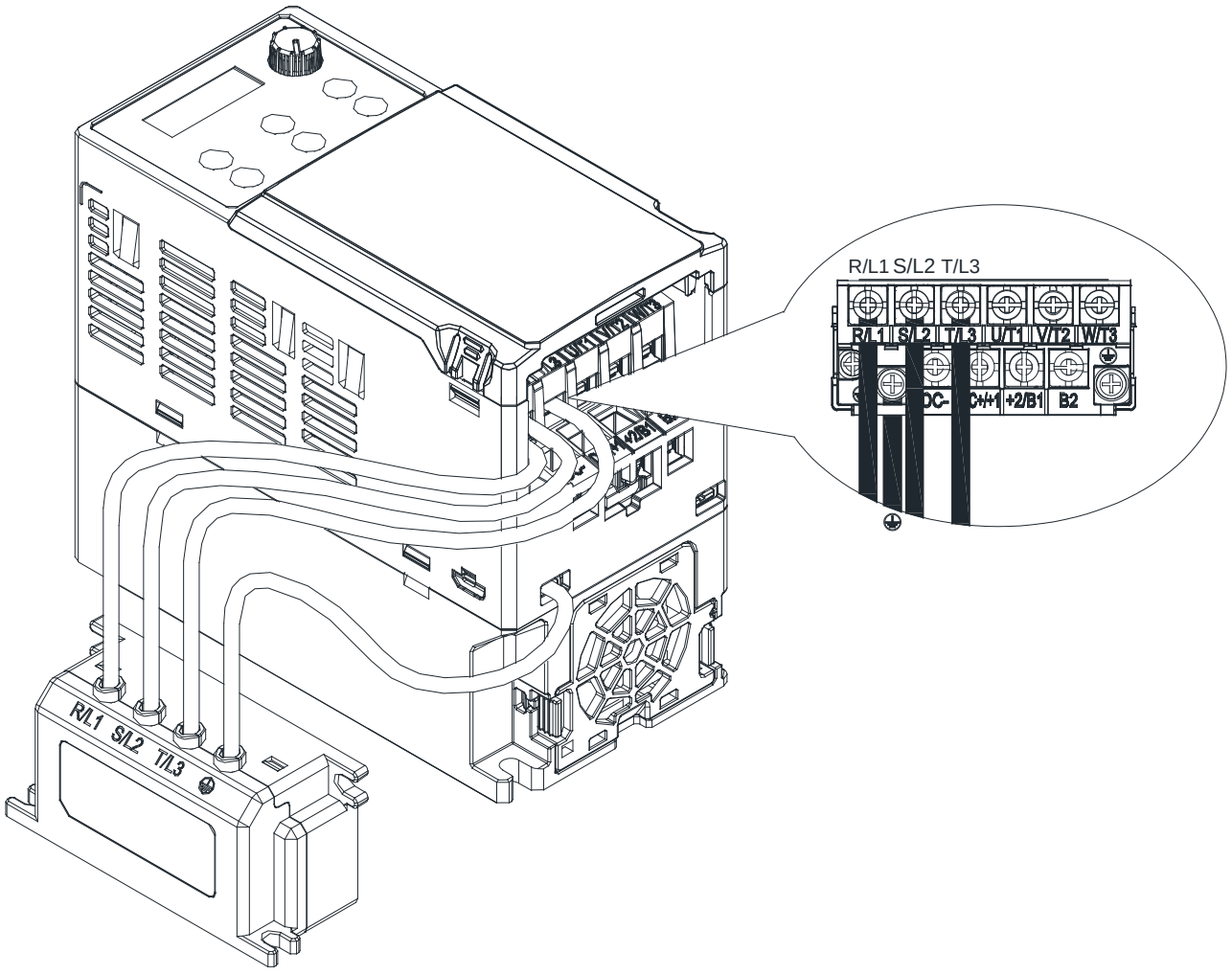

Figure 7-34

Specifications:

Model	Capacitance	Temperature range
CXY101-43A	Cx: 1 μF ± 20 % Cy: 0.1 μF ± 20 %	-40– +85°C

Table 7-42

Dimensions:

CXY101-43A

Unit: mm [inch]

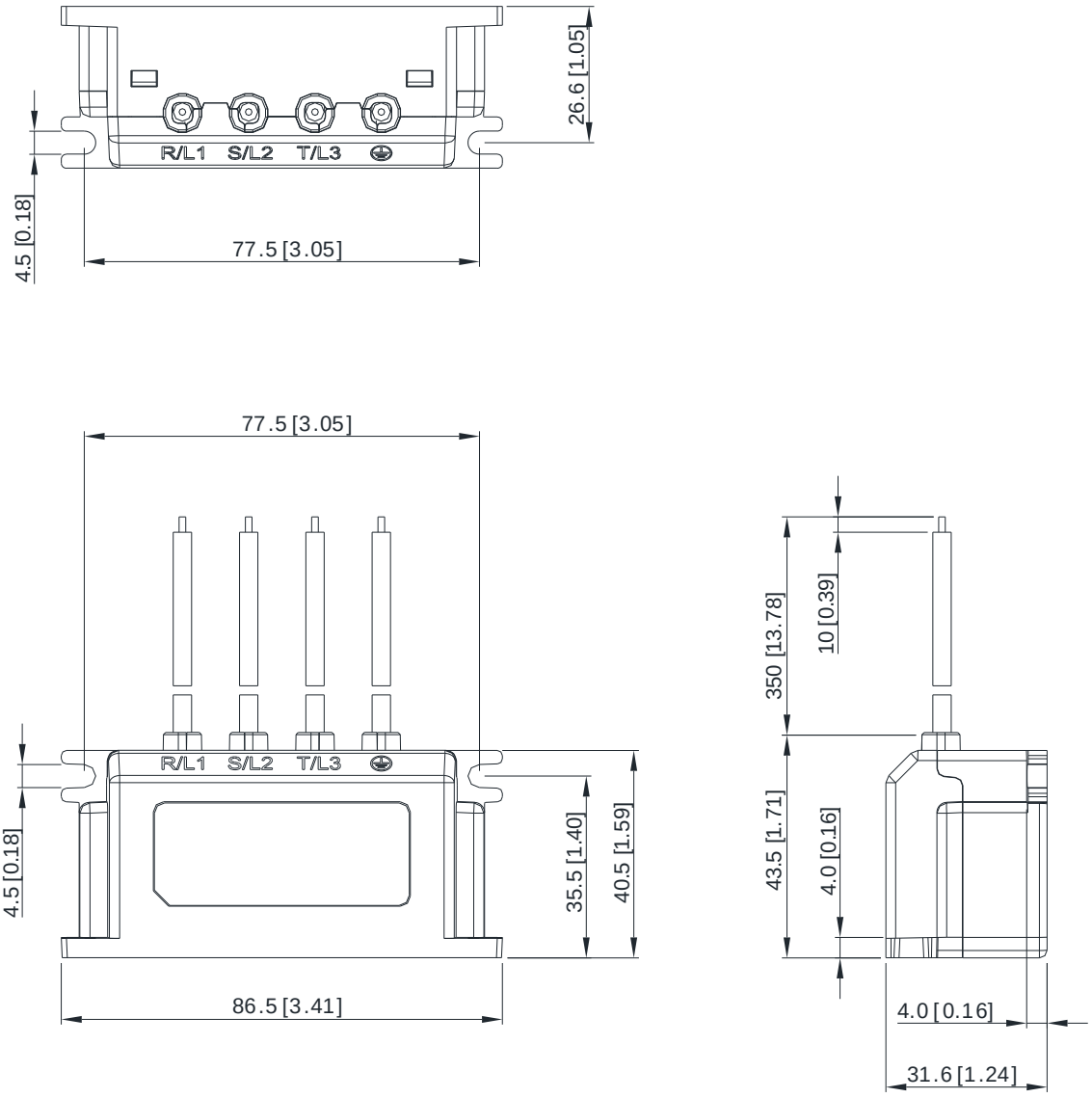

Figure 7-35

7-9 NEMA 1 / UL Type 1 Kit

Conduit boxes installation.

Frame A (A1, A2)

Conduit box model: MKME-CBA0

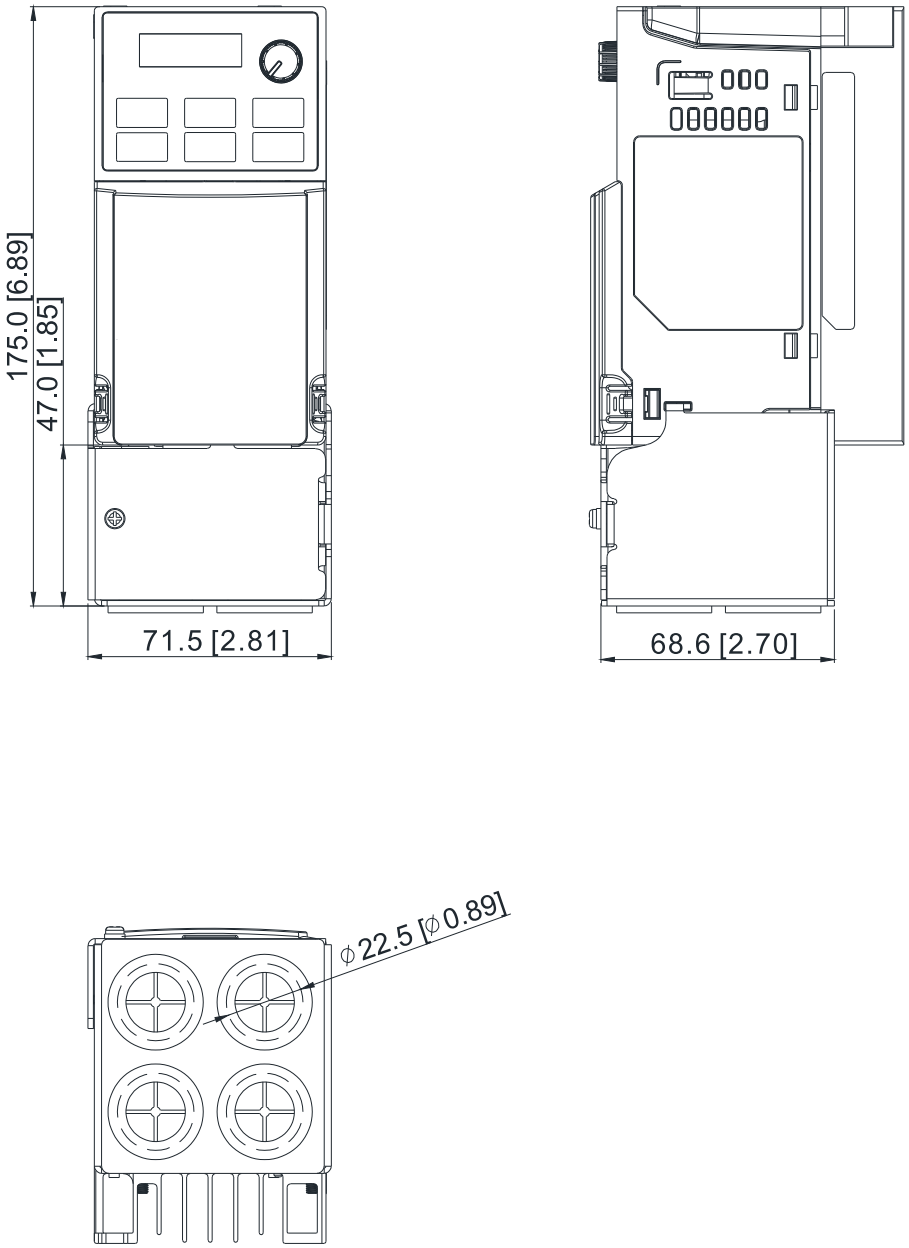

Unit: mm [inch]

Figure 7-36

Frame A (A3–A6)

Conduit box model: MKME-CBA

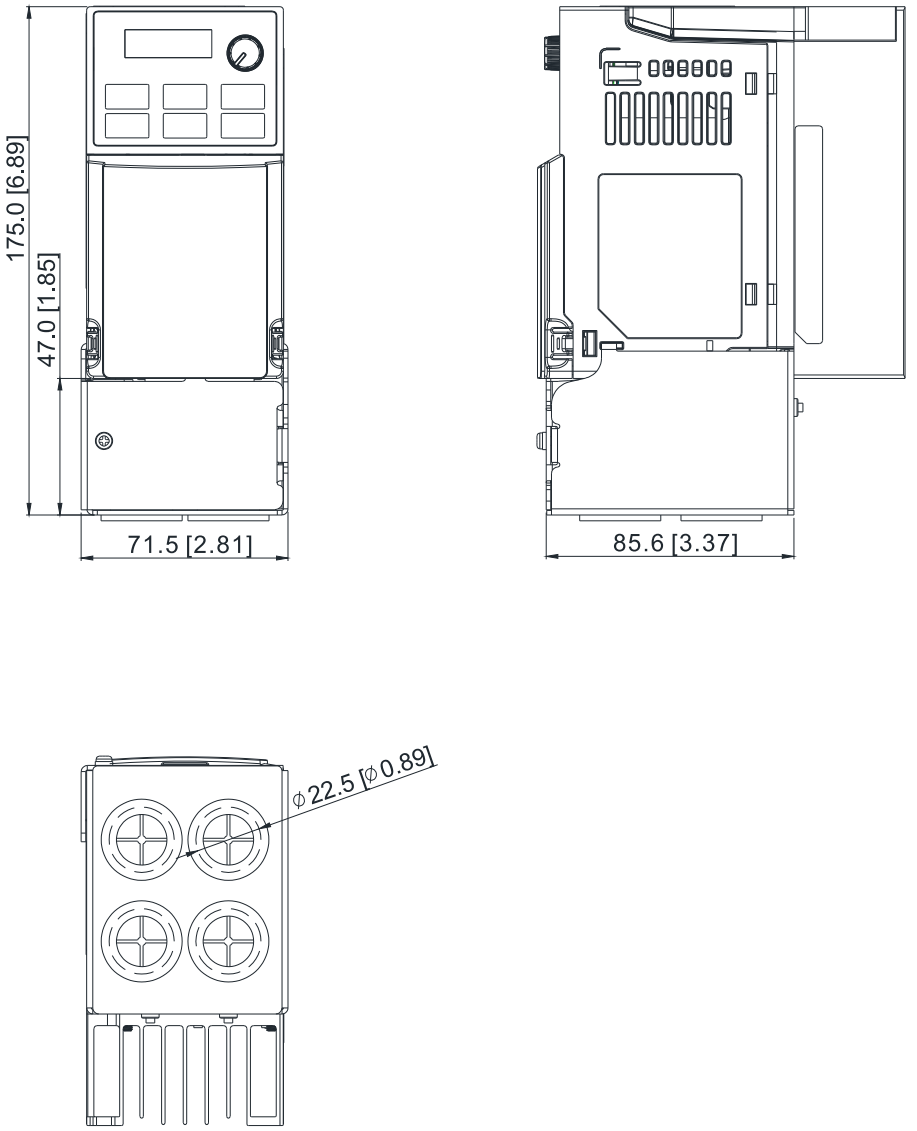

Unit: mm [inch]

Figure 7-37

Frame B

Conduit box model: MKME-CBB

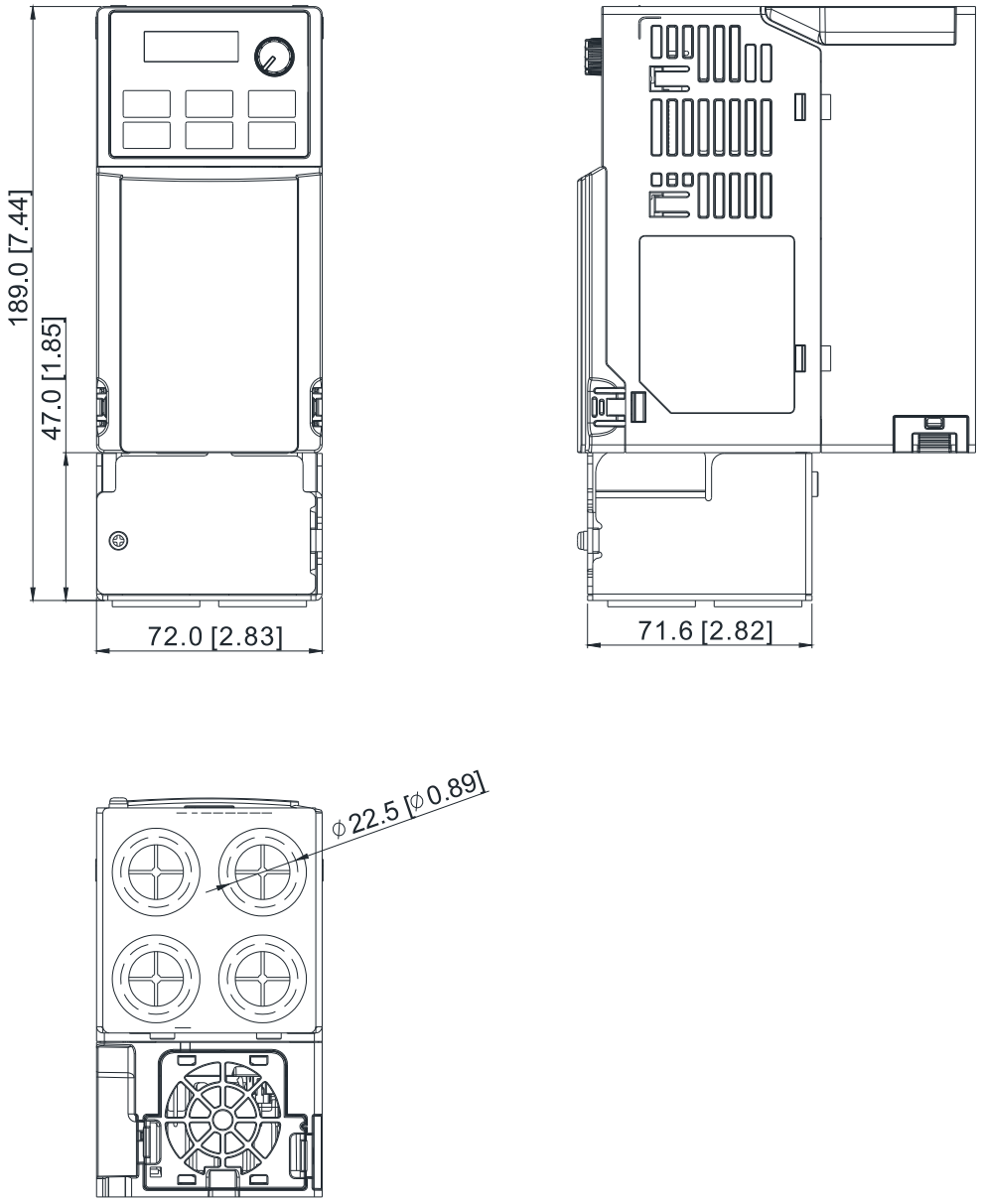

Unit: mm [inch]

Figure 7-38

Frame C

Conduit box model: MKME-CBC

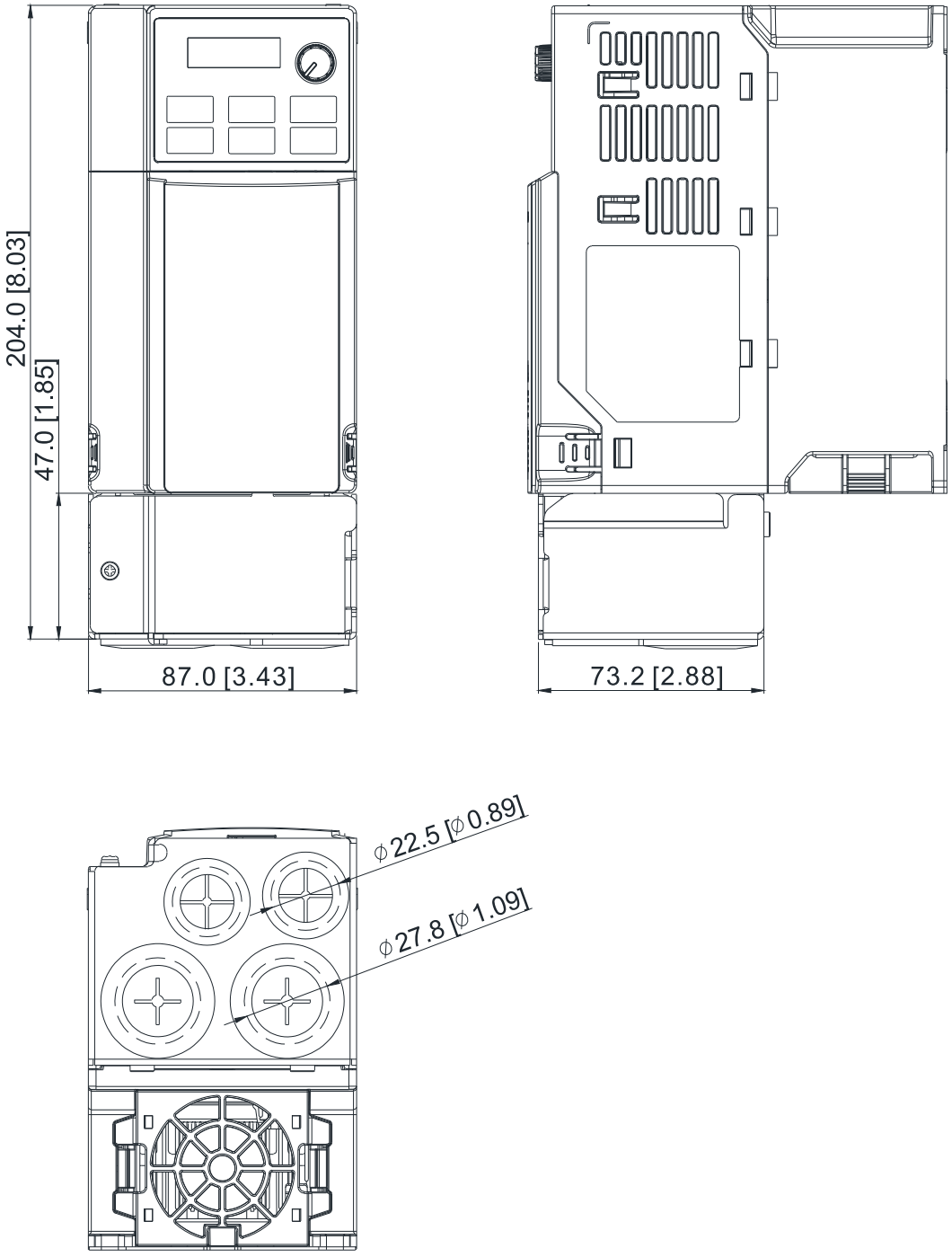

Unit: mm [inch]

Figure 7-39

Frame D

Conduit box model: MKME-CBD

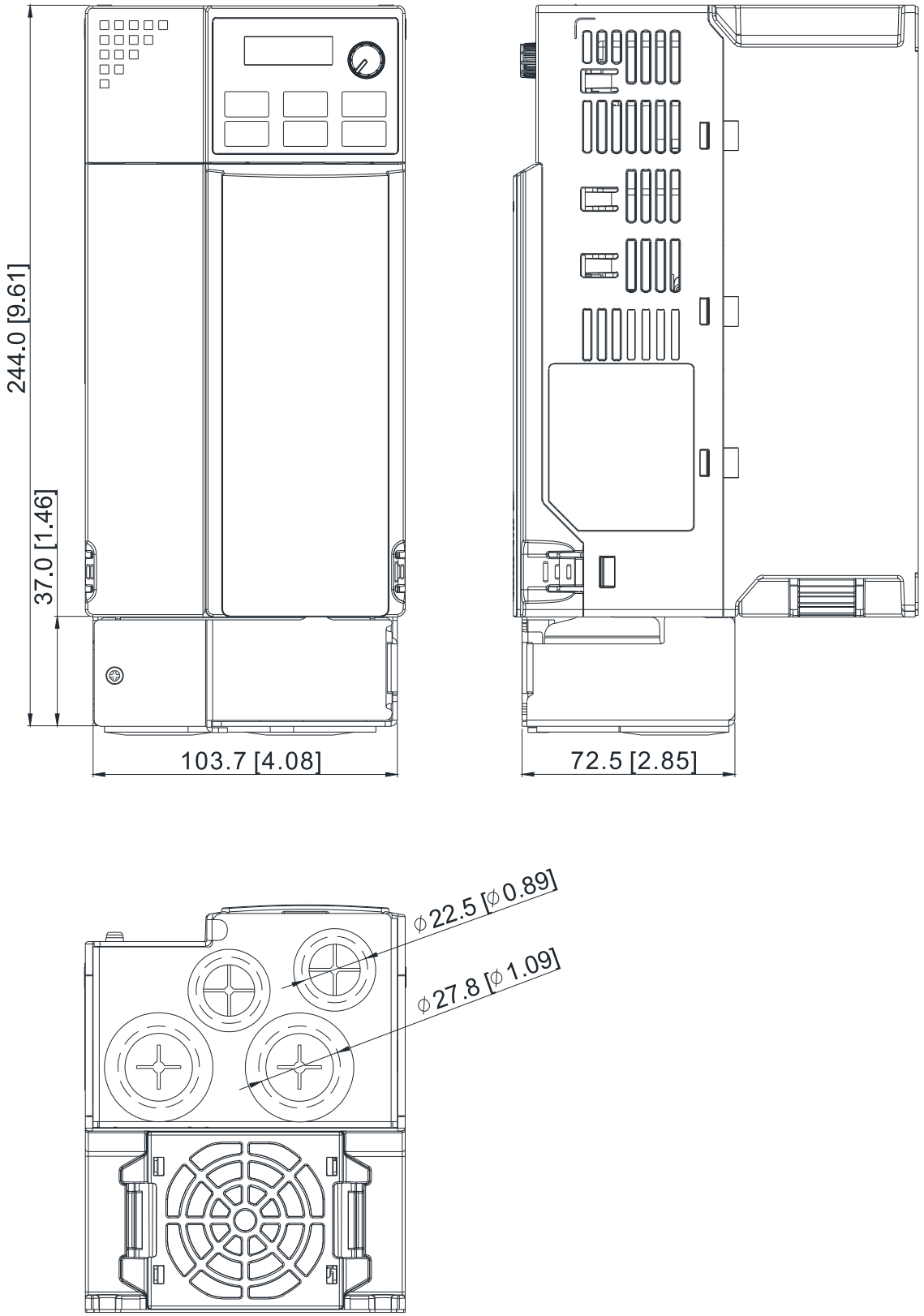

Unit: mm [inch]

Figure 7-40

Installation:

Recommended screw torque: M3: 4–6 kg-cm / [3.5–5.2 lb-in.] / [0.39–0.59 Nm]
M3.5: 4–6 kg-cm / [3.5–5.2 lb-in.] / [0.39–0.59 Nm]
M4: 6–8 kg-cm / [5.2–6.9 lb-in.] / [0.59–0.78 Nm]

Frame A

1.

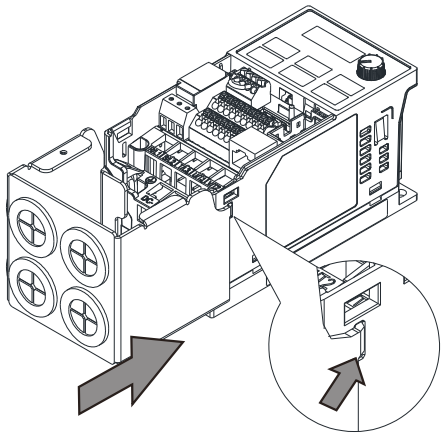

Figure 7-41

2.

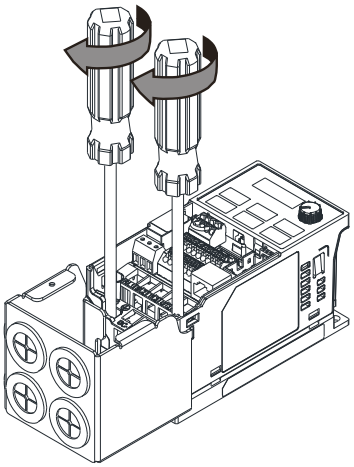

Figure 7-42

3.

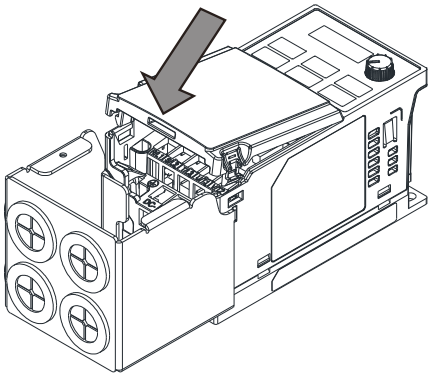

Figure 7-43

4.

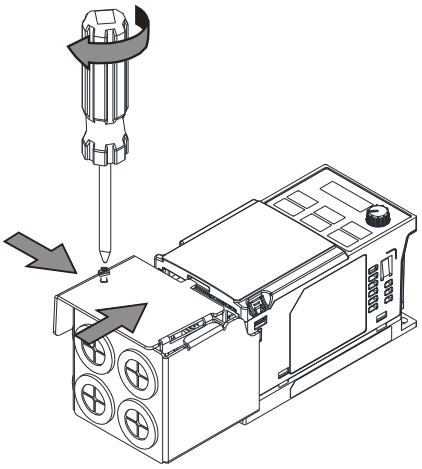

Figure 7-44

5.

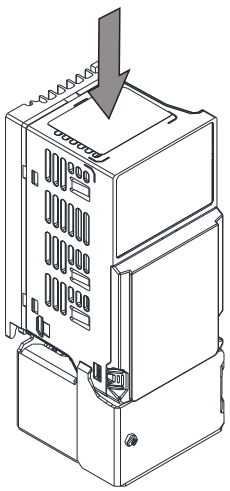

Figure 7-45

Frame B–D

1.

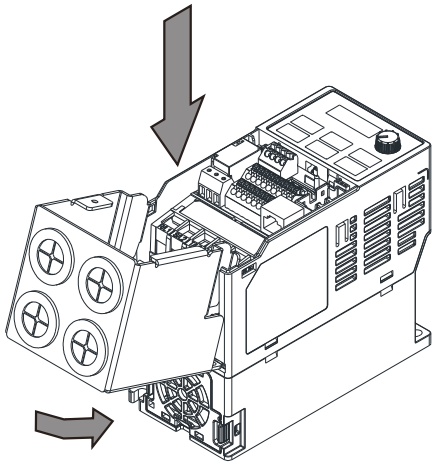

Figure 7-46

2.

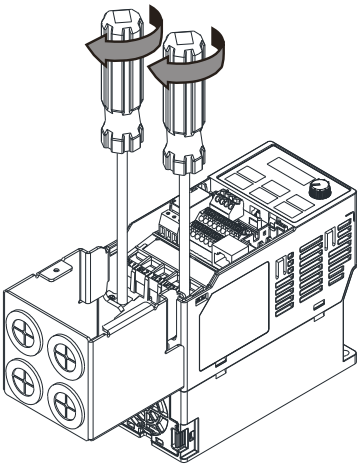

Figure 7-47

3.

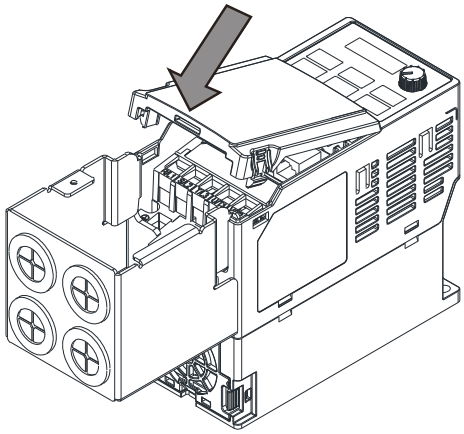

Figure 7-48

4.

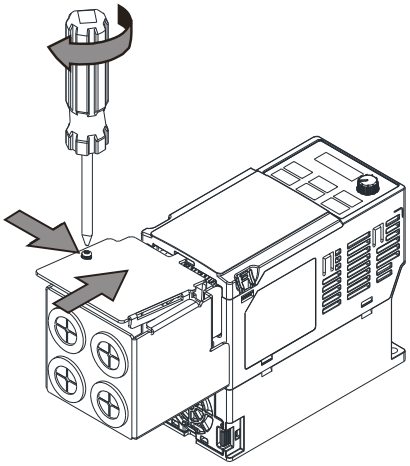

Figure 7-49

5.

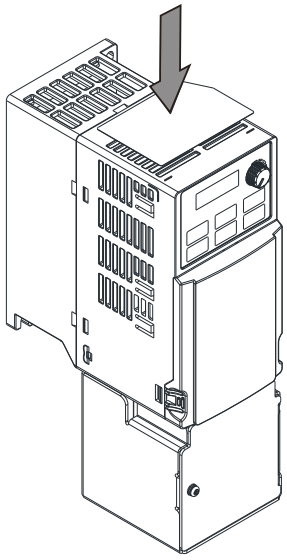

Figure 7-50

7-10 Fan Kit

<table>
<tr><th>Frame</th><th>Fan Model</th><th>Fan Kit</th></tr>
<tr><td>A</td><td>MKM-FKMA</td><td rowspan="4"> 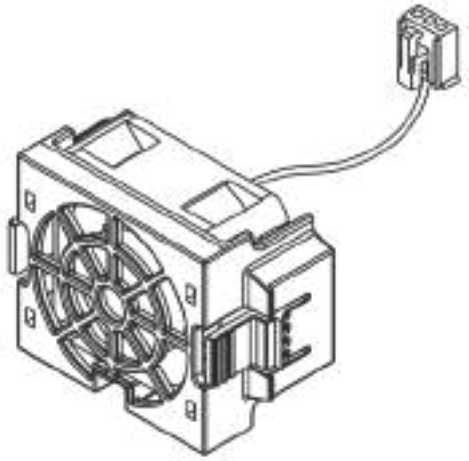
Figure 7-51</td></tr>
<tr><td>B</td><td>MKM-FKMB</td></tr>
<tr><td>C</td><td>MKM-FKMC</td></tr>
<tr><td>D</td><td>MKM-FKMD</td></tr>
<tr><td colspan="3">Fan Removal</td></tr>
<tr><td colspan="2">1. As shown in the figure, press the tabs on both sides of the fan to remove it.
 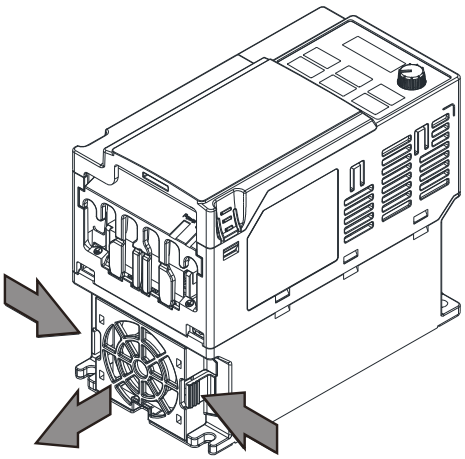
Figure 7-52</td><td>2. Disconnect the power cable when removing the fan.
 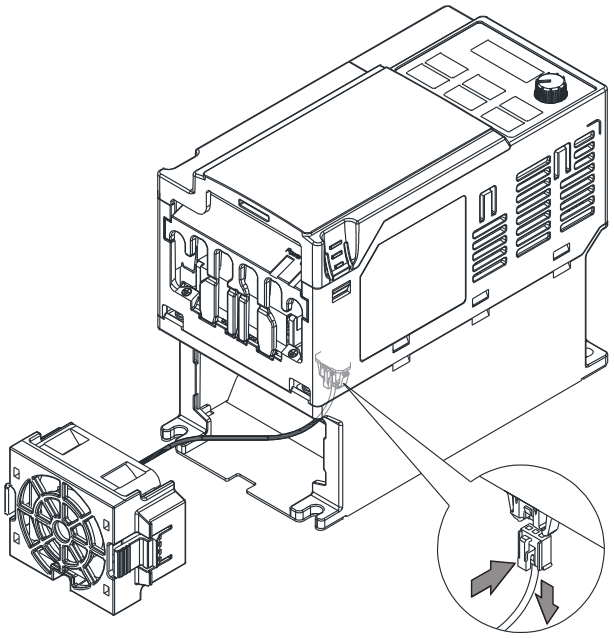
Figure 7-53</td></tr>
</table>

Table 7-43

7-11 DIN-Rail Mounting

MKM-DRB (applicable for Frame A and Frame B)

Screw	Torque
M*2PCS	8–10 kg-cm [6.9–8.7 lb-in.] [0.7–98 Nm]

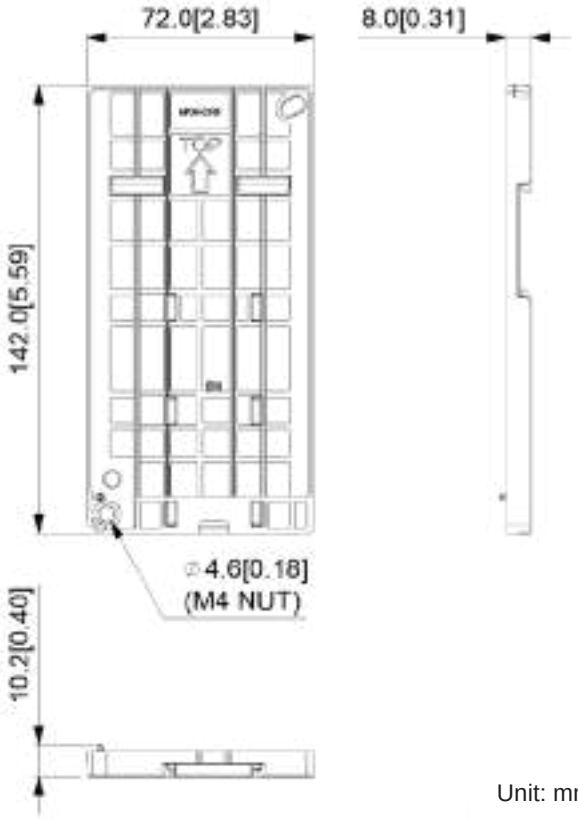

Unit: mm [inch]

Figure 7-54

MKM-DRC (applicable for Frame C)

Screw	Torque
M5*4PCS	10–12 kg-cm [8.7–10.4 lb-in.] [0.98–1.18 Nm]

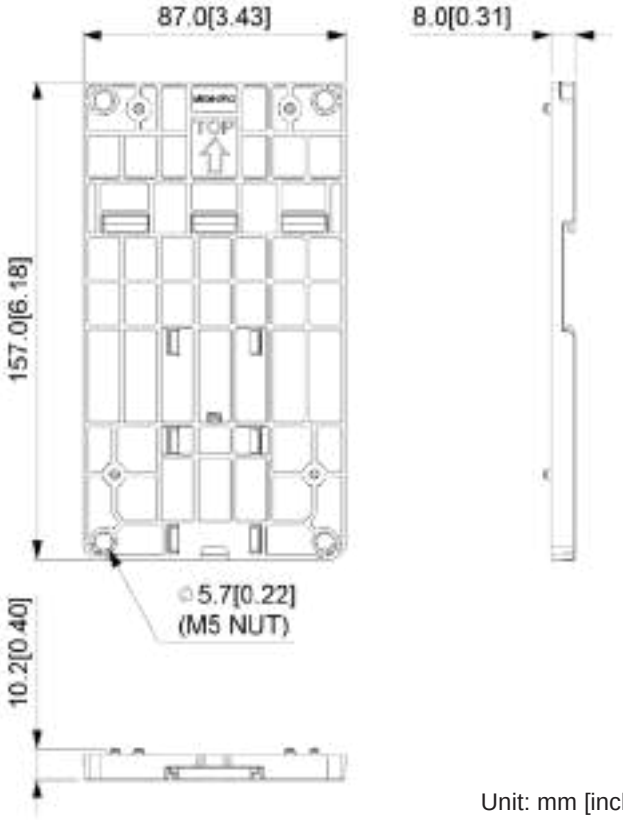

Unit: mm [inch]

Figure 7-55

Installation

MKM-DRB

Screw	Torque
M4*P0.7*2PCS	8–10 kg-cm [6.9–8.7 lb-in.] [0.78–0.98 Nm]

MKM-DRC

Screw	Torque
M5*P0.8*4PCS	10–12 kg-cm [8.7–10.4 lb-in.] [0.98–1.18 Nm]

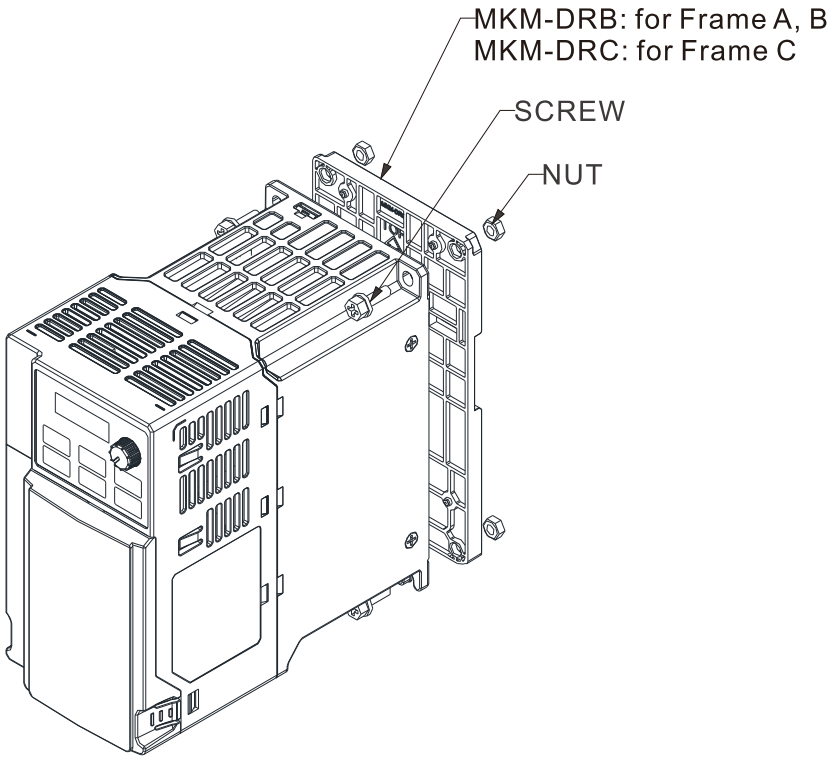

Figure 7-56

7-12 Mounting Adapter Plate

This mounting adapter accessory is to change the wiring method for the ME300 / MS300 / MH300 series to provide flexible installation. It changes the wiring from the main input/motor output at the bottom to the main input from the top and the motor output from the bottom. However, when you use the mounting adapter plate to change the drive from the VFD-E/VFD-EL series to the ME300/MS300/MH300 series, you can still use the original wiring method. The following table shows the correspondences.

Series / Models	ME300 / MS300 / MH300	VFD-E	VFD-EL
MKM-MAPB	Frame A–B	Frame A	Frame A
MKM-MAPC	Frame C	Frame B	Frame B

Table 7-44

MKM-MAPB: Applicable for Frame A and B

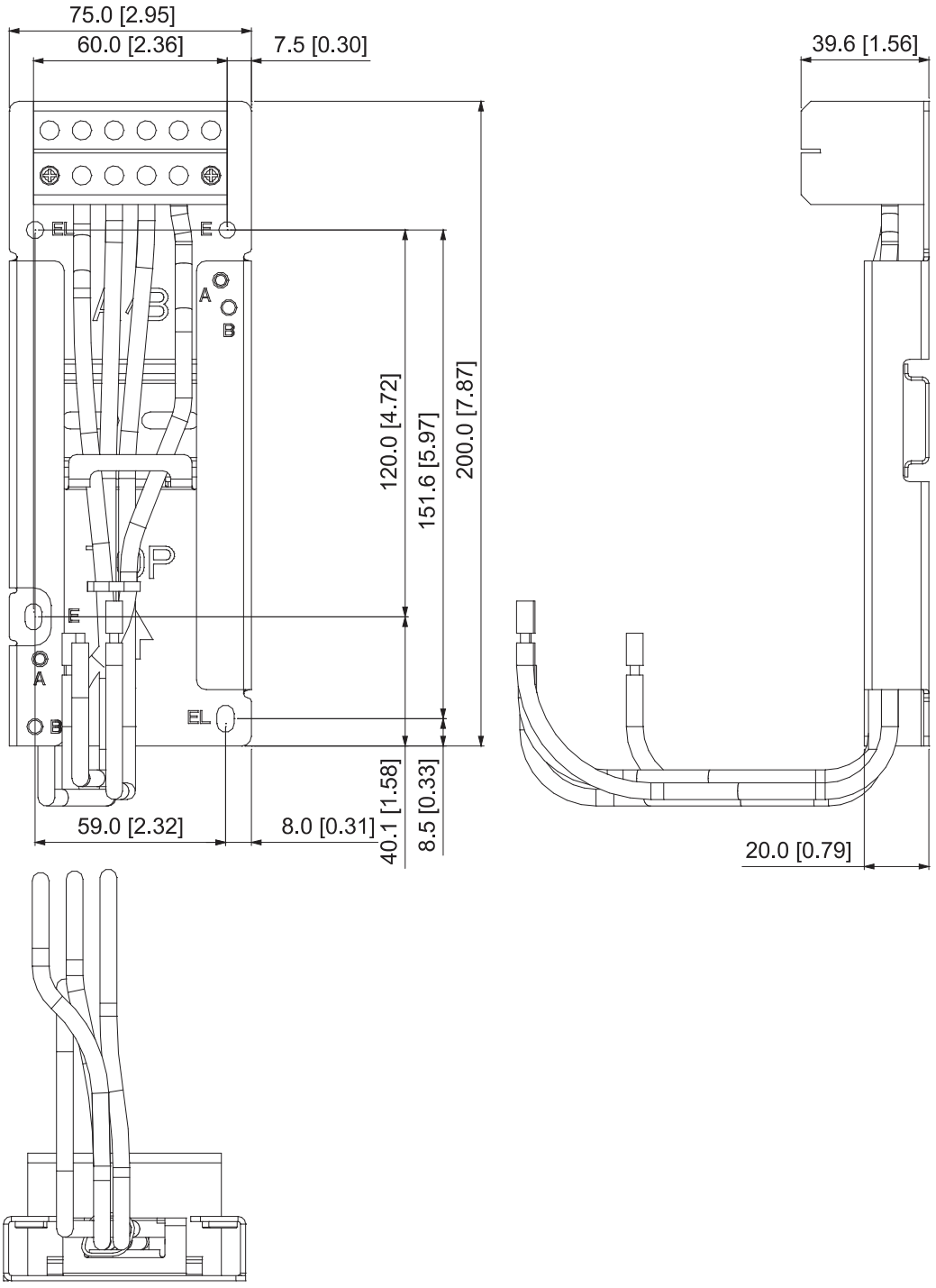

Unit: mm [inch]

Figure 7-57

MKM-MAPC: Applicable for Frame C

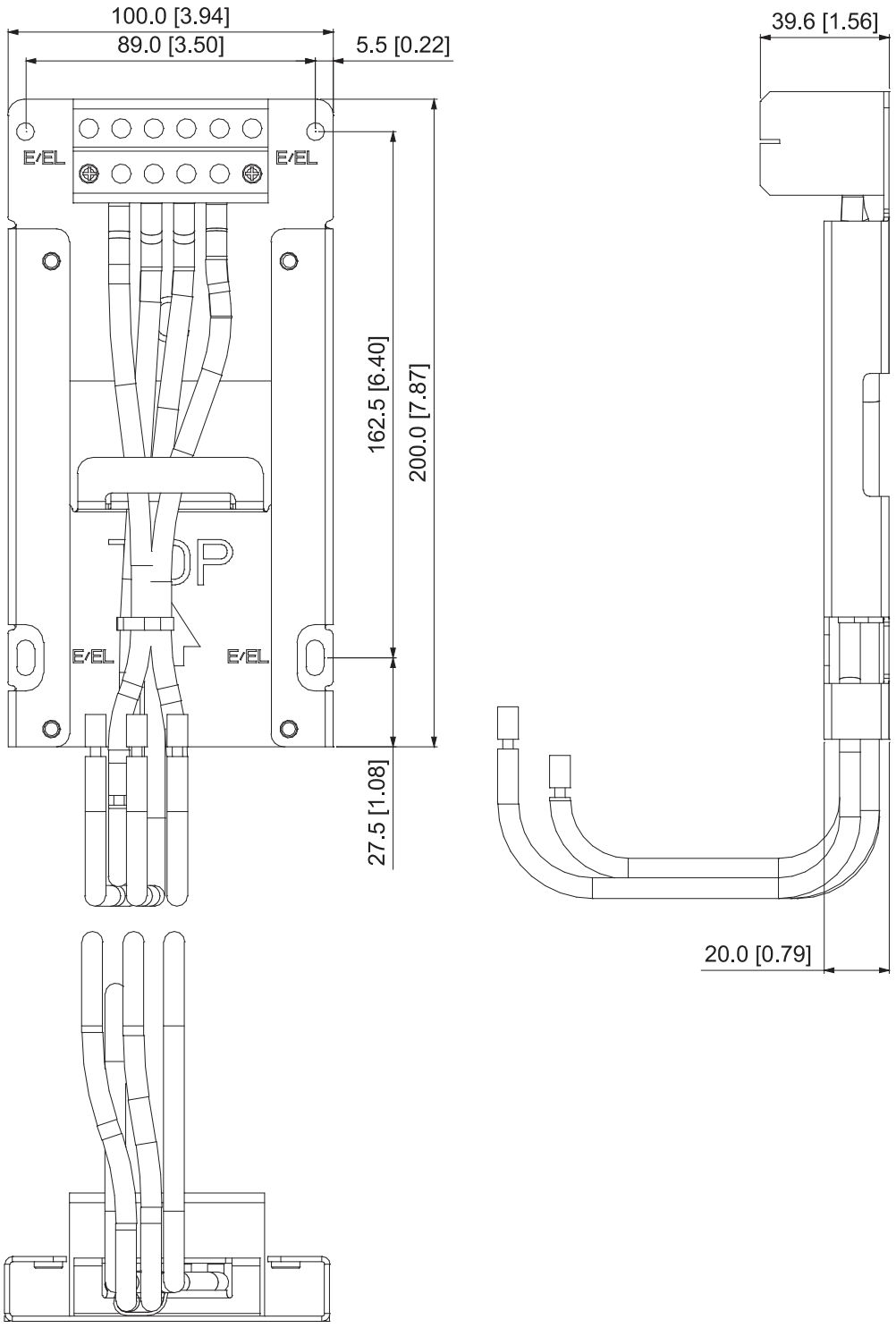

Unit: mm [inch]

Figure 7-58

Installation

Frame A and B

Screw	Torque
M4	14–16 kg-cm / [12.4–13.9 lb-in.] / [1.37–1.57 Nm]
M5	16–20 kg-cm / [13.9–17.4 lb-in.] / [1.57–1.96 Nm]

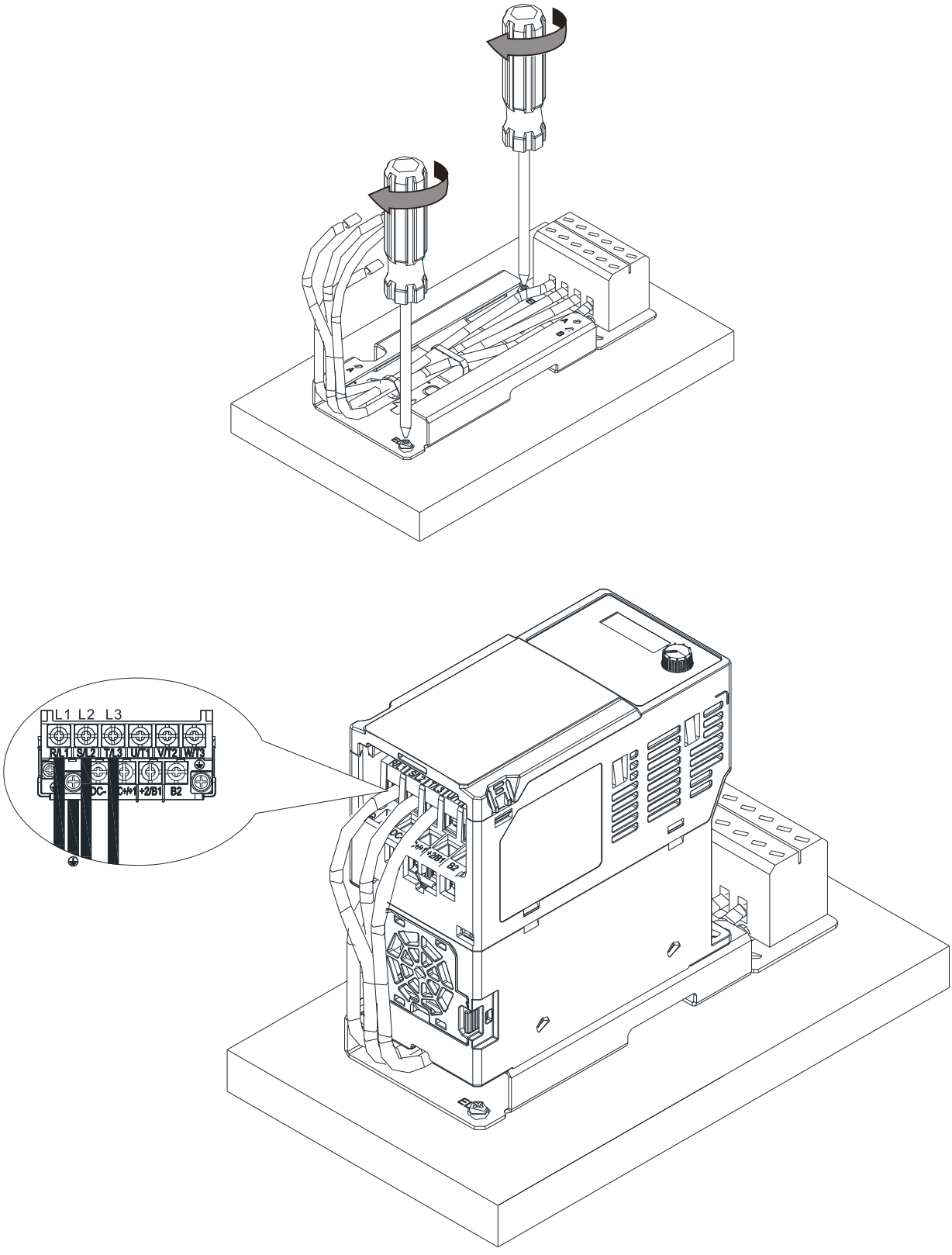

Unit: mm [inch]

Figure 7-59

Frame C

Screw	Torque
M4	14–16 kg-cm / [12.4–13.9 lb-in.] / [1.37–1.57 Nm]
M5	16–20 kg-cm / [13.9–17.4 lb-in.] / [1.57–1.96 Nm]

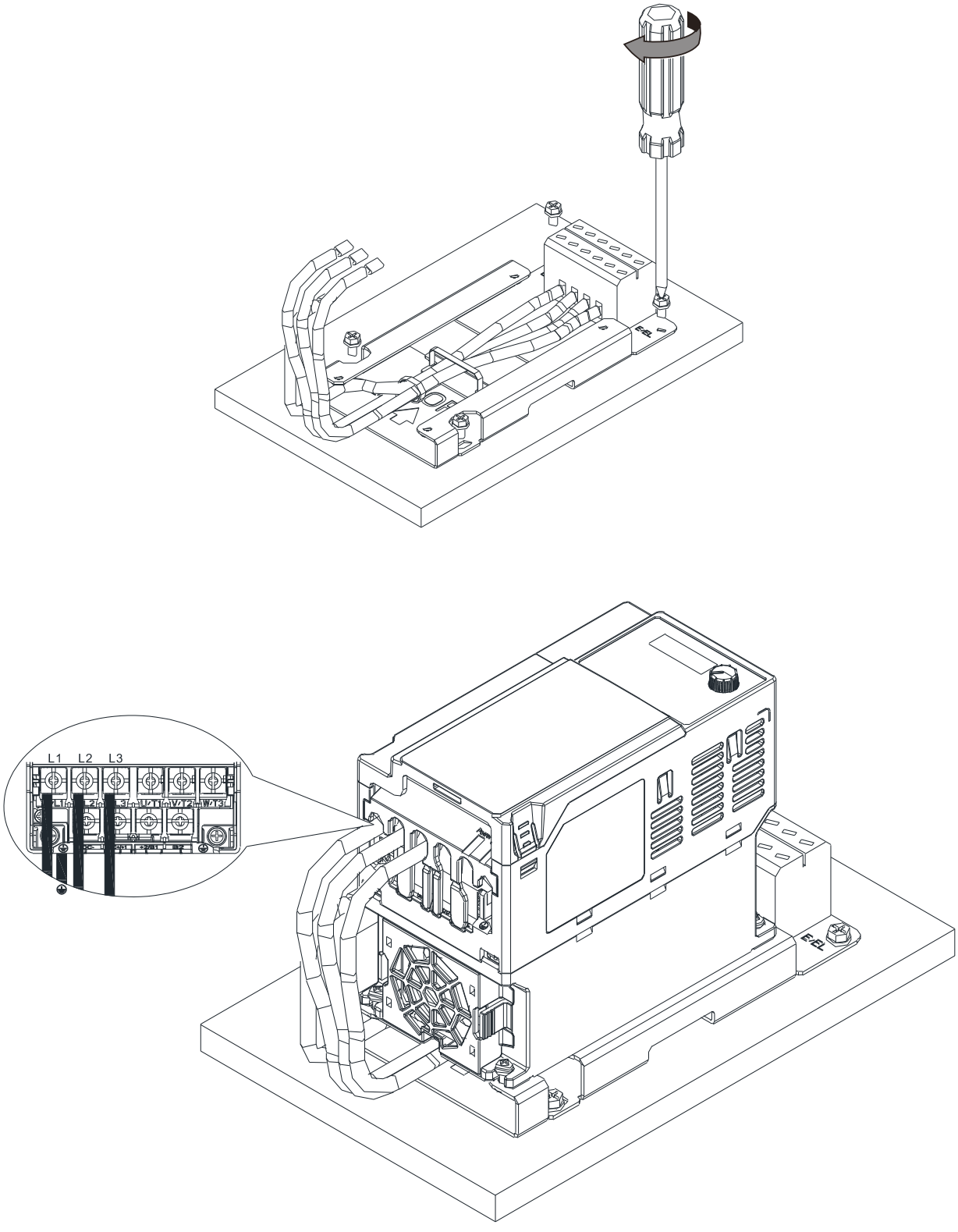

Unit: mm [inch]

Figure 7-60

7-13 Digital Keypad–KPC-CC01, KPC-CE01

7-13-1 Keypad Panel introduction

The default communication protocol for ME300 is ASCII 9600, 7, N, 2, whereas the default communication protocol for KPC-CC01 is RTU 19200, 8, N, 2. So you must set the ME300 communication parameters as follows to connect it to KPC-CC01.

- Pr.09-00 Communication Address: Settings = 1
- Pr.09-01 COM1 Transmission Speed (Baud rate): Settings = 19.2 Kbps
- Pr.09-04 COM1 Communication Protocol: Settings = 13: 8N2 (RTU)

KPC-CC01

KPC-CE01

Communication Interface

RJ45 (socket), RS-485 interface

Communication Protocol

RTU19200, 8, N, 2

Installation Method

- ☑ Install the embedded type on the surface of the control box. The front cover is waterproof.
- ☑ Buy a MKC-KPPK model for wall mounting or embedded mounting. Its protection level is IP66.
- ☑ The maximum RJ45 extension lead is 5 m (16 ft)
- ☑ This keypad can only be used on Delta's motor drive C2000, CH2000, CP2000, MS300, MH300, and ME300.

Keypad Functions Description

Key	Descriptions
	Start Operation Key 1. Only valid when the source of operation command is the keypad. 2. Operates the AC motor drive by the function setting. The RUN LED will be ON. 3. Can be pressed repeatedly at the stop process.
	Stop Command Key. 1. This key has the highest priority when the command is from the keypad. 2. When it receives the STOP command, regardless of whether the AC motor drive is in operation or stop status, the AC motor drive executes the "STOP" command. 3. Use the RESET key to reset the drive after a fault occurs. 4. If you cannot reset after the error: a. The condition which triggers the fault is not cleared. After you clear the condition, you can then reset the fault. b. The drive is in fault status when powered on. After you clear the condition, restart and then you can reset the fault.
	Operation Direction Key 1. Only controls the operation direction, NOT the drive activation. FWD: forward, REV: reverse. 2. Refer to LED Descriptions for more details.

Key	Descriptions
	ENTER Key Goes to the next menu level. If at the last level, press ENTER to execute the command.
	ESC Key Leaves the current menu and returns to the previous menu; also functions as a return key or cancel key in a sub-menu.
	Returns to the main menu. Menu commands: 1. Parameter Setup 2. Quick Start 3. Application Selection List 4. Changed List 5. Copy Parameter 6. Fault Record 7. Language Setup 8. Time Setup 9. Keypad Locked 10. PLC Function 11. Copy PLC 12. Display Setup 13. Start-up Menu 14. Main Page 15. PC Link 16. Start Wizard ■ KPC-CE01 only supports function 1, 5, 9 and 10. ■ ME300 models do not support function 2, 8, 10, 11 and 16.
	Direction: Left / Right / Up / Down 1. In the numeric value setting mode, moves the cursor and changes the numeric value. 2. In the menu / text selection mode, selects an item.
	Function Key 1. The functions keys have defaults and can also be user-defined. The defaults for F1 and F4 work with the function list below. For example, F1 is the JOG function, F4 is a speed setting key for adding / deleting user-defined parameters. 2. Other functions must be defined using TPEditor. Download TPEditor software at Delta website. Select TPEditor version 1.60 or above. Refer to the installation instruction for TPEditor in Section 7-13-3.
	HAND Key 1. Use this key to select HAND mode. In this mode, the drive's parameter settings for frequency command source is Pr.00-30, and that for operation command source is Pr.00-31. 2. Press the HAND key at STOP, then the setting switches to the HAND frequency source and HAND operation source. 3. Press HAND key at RUN, and it stops the AC motor drive first (displays AHSP warning), and switches to HAND frequency source and HAND operation source. 4. Successful mode switching for KPC-CE01, "HAND" LED will be on; for KPC-CC01, it displays HAND mode on the screen.
	AUTO Key 1. The default of the drive is AUTO mode. 2. Use this key to select AUTO mode. In this mode, the drive's parameter settings for frequency command source is Pr.00-20, and that for operation command is Pr.00-21. 3. Press the AUTO key at STOP, then the setting switches to the AUTO frequency source and AUTO operation source. 4. Press AUTO key at RUN, and it stops the AC motor drive first (displays AHSP warning), and switches to AUTO frequency source and AUTO operation source. 5. Successful mode switching for KPC-CE01, "AUTO" LED will be on; for KPC-CC01, it displays AUTO mode on the screen.

NOTE: The defaults for the frequency command and operation command source of HAND / AUTO mode are both from the keypad.

LED Functions Descriptions

<table>
<tr><th>LED</th><th>Descriptions</th></tr>
<tr><td>
</td><td>Steady ON: STOP indicator for the AC motor drive.
Blinking: the drive is in standby.
Steady OFF: the drive does not execute the “STOP” command.</td></tr>
<tr><td>
</td><td>Operation Direction LED
1. Green light: the drive is running forward.
2. Red light: the drive is running backward.
3. Flashing: the drive is changing direction.
Operation Direction LED under Torque Mode
1. Green light: when the torque command ≥ 0, and the motor is running forward.
2. Red light: when the torque command < 0, and the motor is running backward.
3. Flashing: when the torque command < 0, and the motor is running forward.</td></tr>
<tr><td>
</td><td>(Only KPC-CE01 supports this function)
Steady ON: In HAND/ LOC mode; Steady OFF: In AUTO/ REM mode</td></tr>
<tr><td>
</td><td>(Only KPC-CE01 supports this function)
Steady ON: In AUTO/ REM mode; Steady OFF: In HAND/ LOC mode</td></tr>
<tr><td>CANopen–
“RUN”</td><td>RUN LED:
<table>
<tr><th>LED status</th><th>Condition/ State</th></tr>
<tr><td>OFF</td><td>CANopen at initial
No LED</td></tr>
<tr><td>Blinking</td><td>CANopen at pre-operation
 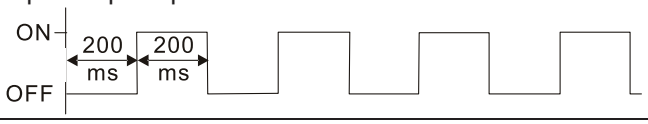
</td></tr>
<tr><td>Single flash</td><td>CANopen at stop
 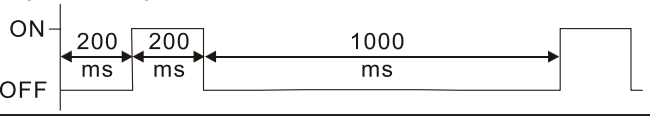
</td></tr>
<tr><td>ON</td><td>CANopen at operation status
</td></tr>
</table></td></tr>
<tr><td>CANopen–
“ERR”</td><td>ERR LED:
<table>
<tr><th>LED status</th><th>Condition/ State</th></tr>
<tr><td>OFF</td><td>No Error</td></tr>
<tr><td>Single flash</td><td>One message fail
 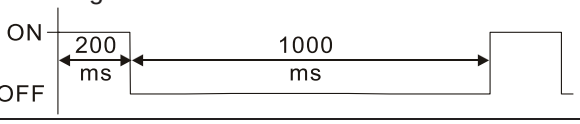
</td></tr>
<tr><td>Double flash</td><td>Node guarding failure or heartbeat message failure
 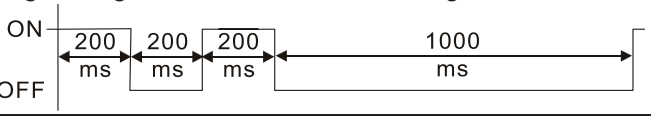
</td></tr>
<tr><td>Triple flash</td><td>Synchronization failure
 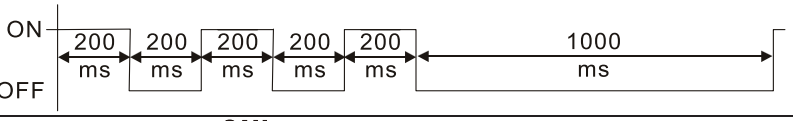
</td></tr>
<tr><td>ON</td><td>Bus off 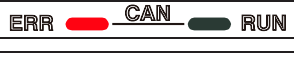
</td></tr>
</table></td></tr>
</table>

7-13-2 Function of Digital Keypad KPC-CC01

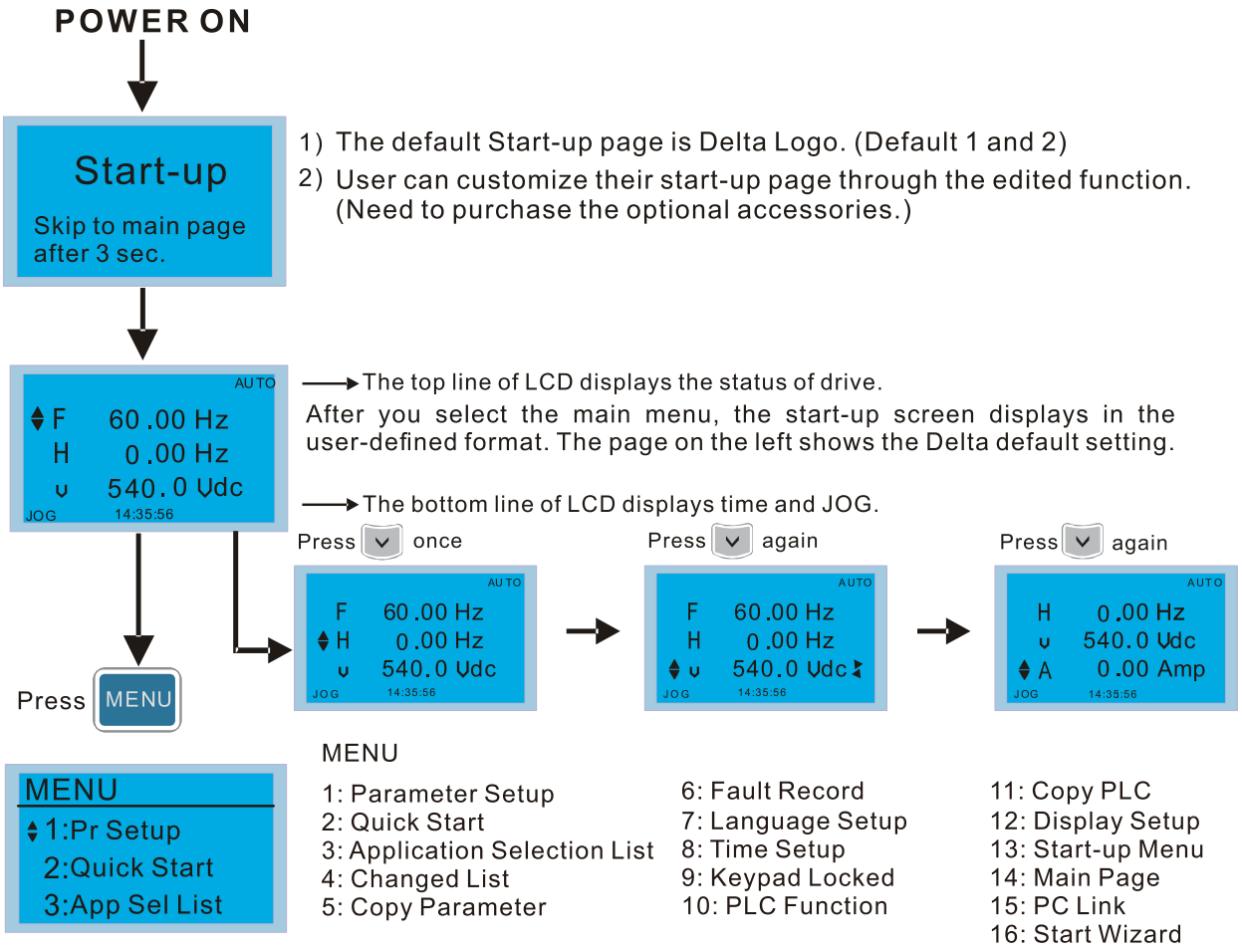

NOTE:

1. Start-up screen can only display pictures, not animation.
2. When powered ON, it displays the start-up screen then the main screen. The main screen displays Delta's default setting F/H/A/U. You can set the display order with Pr.00-03 (Start-up display). When you select the U screen, use the left / right keys to switch between the items, and set the display order for the U screen with Pr.00.04 (User-Defined)).

Display Icon

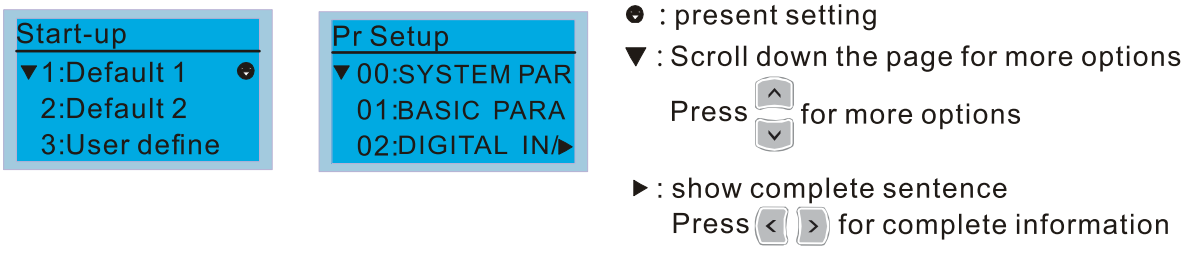

Display item

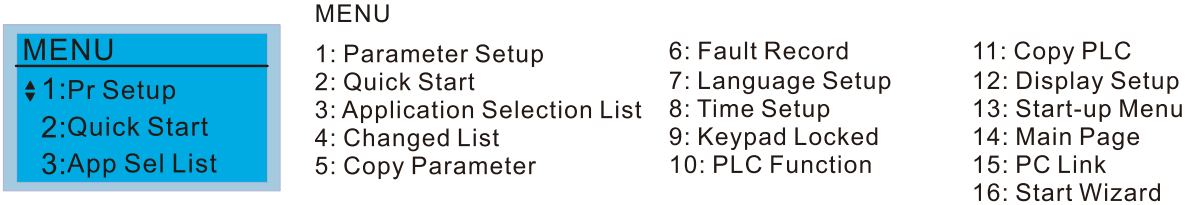

1. Parameter Setup

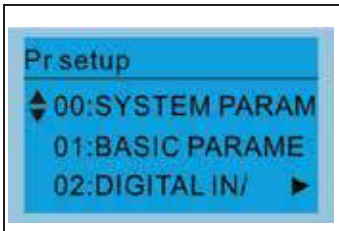

Press ENTER to select.

Press ^ v to select the parameter group.

Once you select a parameter group, press ENTER to go into that group.

For example: Set up source for the master frequency command.

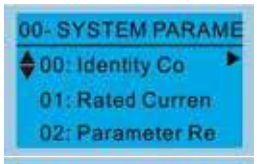

In the Group 00 Drive Parameters, use Up/Down keys to select parameter 20: Auto Frequency Command.

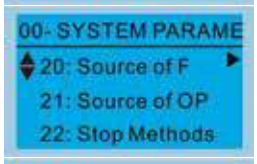

Press ENTER to go to this parameter's setting menu.

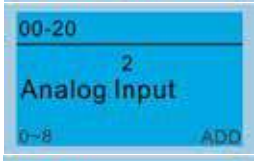

Use the Up/Down keys to choose a setting.
For example: choose 2 Analogue Input, and then press ENTER.

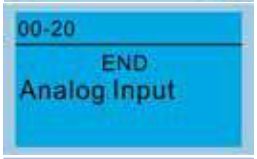

After you press ENTER, END is displayed which means that the parameter setting is done.

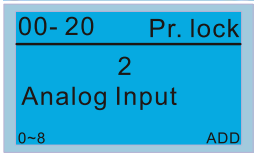

NOTE: When parameter lock/password protection function is enabled, "Pr. lock" displays on the upper right corner of the keypad. In this case, it means that the parameter cannot be written or is protected by the password.

2. Quick Start (ME300 models do not support this function)

3. Application Selection List

This function enables you to select application and its parameter settings.
For example:
In the menu content, select 3: Application Selection List

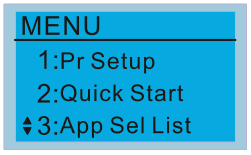

Press ENTER to go into the Application Selection List.

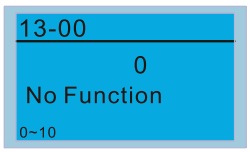

Select Application

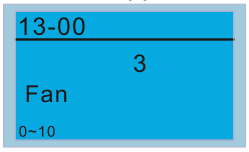

Press ENTER to enter the application selection screen, and the selected application industry is "Fan".

Press ENTER to enter the Fan application screen.

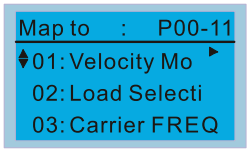

Press the Up/ Down keys to select the parameter to set.

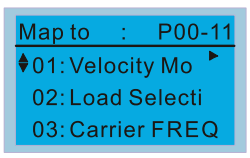

3

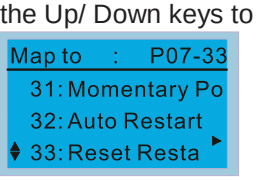

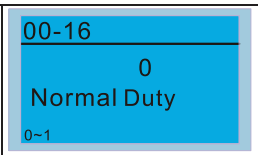

Choose 0: Normal duty or 1: Heavy duty according to your needs, and then press ENTER.

4. Changed List

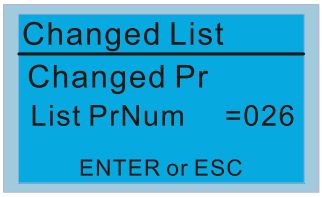

This function records the parameters you have changed.
For example:
Set Pr.13-00 Application Selection = 3: Fan.

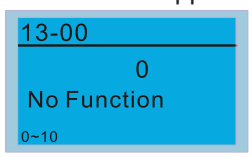

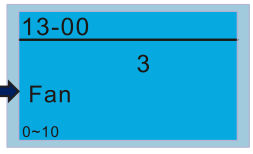

Enter the changed list screen. List PrNum = 026 means that there are 26 parameters that have been changed.

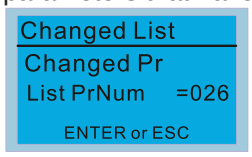

Press ENTER to enter the changed list screen.

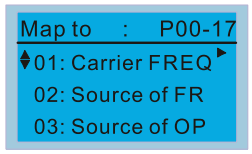

Use the Up/ Down keys to select the parameters to check or to change.
Press ENTER to enter the parameter.

5. Copy Parameter

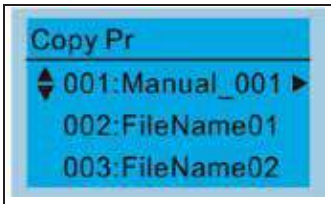

Press ENTER to go to

001–004: content storage.

Four groups of parameters are available to copy.
The steps are shown in the example below.
Example: parameter saved in the motor drive.

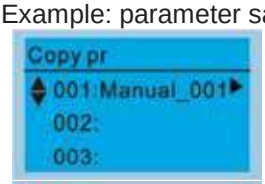

1. Go to “Copy Parameter”
2. Select the parameter group to copy and press ENTER.

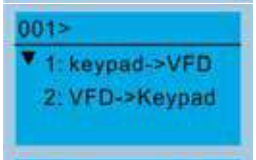

1. Select 1: keypad → VFD.
2. Press ENTER to go to the “keypad → VFD” screen.

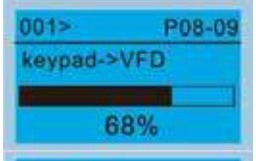

Begin copying parameters until it is done.

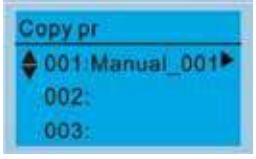

After copying is done, the keypad automatically returns to this screen.

Example: parameter saved in the keypad.

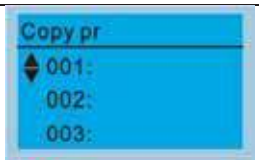

1. Go to Copy parameter
2. Select the parameter group to copy and press ENTER.

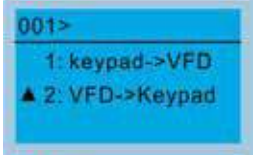

Press ENTER to go to the “VFD → keypad” screen.

Press the Up/ Down keys to select a symbol.
Press the Left/ Right keys to move the cursor to select a file name.

String & Symbol Table:
ＡＢＣＤＥＦ＠？＜＝＞；：０１２３４５６７８９／・－，＋＊（）’ ＆％＄＃” ！
ＧＨＩＪＫＬＭＮＯＰＱＲＳＴＵＶＷＸＹＺ〔＼〕︿＿ ‘ａｂｃｄｆｇｈｉｊｋｌｍ
～｛｜｝ｎｏｐｑｒｓｔｕｖｗｘｙｚ

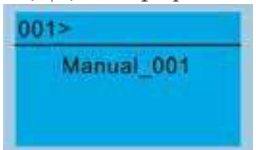

After you confirm the file name, press ENTER.

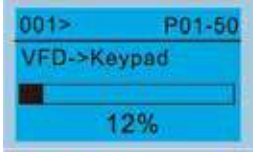

Begin copying parameters until it is done.

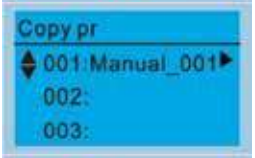

After copying parameters is done, the keypad automatically returns to this screen.

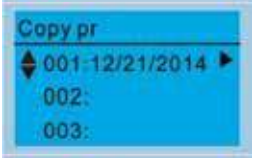

Press the Right key to see the date the parameters copied.

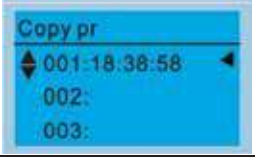

Press the Right key to see the time the parameters copied.

6. Fault Record

Press ENTER to see an error record’s details. KPC-CE01 does not support this function.

Able to store 6 error codes (Keypad V1.02 and previous versions).
Able to store 30 error codes (Keypad V1.20 and later version).
The most recent error record shows as the first record. Choose an error record to see details such as date, time, frequency, current, voltage, and DC bus voltage.

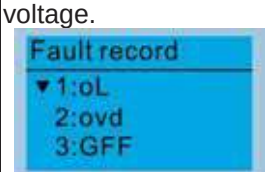

Press the Up/ Down keys to select an error record.
Press ENTER to see that error record’s details.

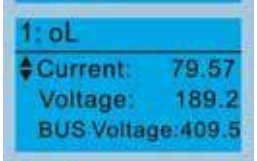

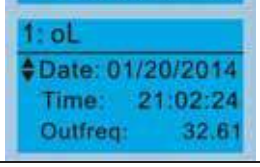

Press the Up/ Down keys to scroll through an error record’s details such as date, time, frequency, current, voltage, and DC bus voltage.

	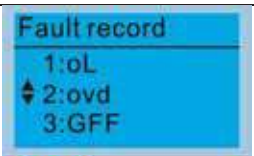 Press the Up/ Down keys to select the next error record. Press ENTER to see that error record's details. 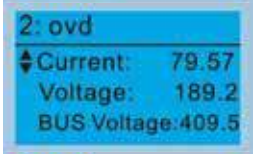 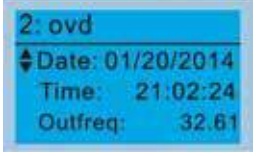 Press the Up/ Down keys to see an error record's details such as date, time, frequency, current, voltage, and DC bus voltage. **NOTE:** The AC motor drive actions are recorded and saved to the KPC-CC01. When you remove the KPC-CC01 and connect it to another AC motor drive, the previous fault records are not deleted. The new fault records of the new AC motor drive continue to be added to the KPC-CC01.

7. Language Setup

 Use the Up / Down keys to select the language, and then press ENTER.	The language setting option is displayed in the language of your choice. Language setting options: 1. English 5. Русский 9. Polski 2. 繁體中文 6. Español 10. Deutsch 3. 简体中文 7. Português 11. Italiano 4. Türkçe 8. français 12. Svenska

8. Time Setup (ME300 models do not support this function)

9. Keypad Locked

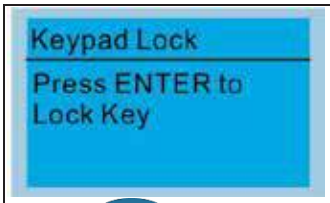 Press ENTER to lock.	Lock the keypad Use this function to lock the keypad. The main screen does not display "keypad locked" when the keypad is locked; however, it displays the message "Press ESC 3 sec to UnLock Key" when you press any key. When the keypad is locked, the main screen does not indicate the lock status. 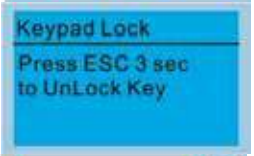 Press any key on the keypad; a message displays as shown on the left. If you do not press ESC, the keypad automatically returns to this screen. 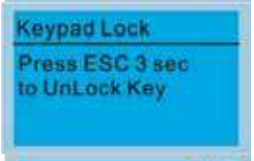 Press any key on the keypad, a message displays as shown on the left. Press ESC for 3 seconds to unlock the keypad; the keypad returns to this screen. All keys on the keypad are functional.

10. PLC Function (ME300 models do not support this function)

11. Copy PLC (ME300 models do not support this function)

12. Display Setup

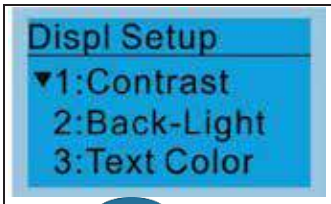

Press ENTER to go to the setting screen.

1. Contrast

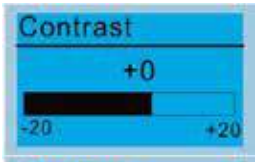

Press the Up / Down keys to adjust the setting value.

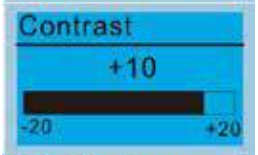

For example, increase Contrast to +10.

After you set the value, press ENTER to see the screen display after contrast is adjusted to +10.

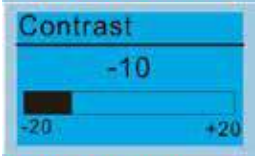

Then press ENTER and decrease the Contrast to -10.

Press ENTER to see screen display after contrast is adjusted to -10.

2. Back-light

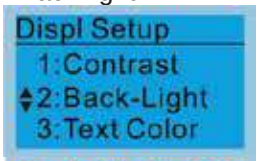

Press ENTER to go to the Back-Light Time Setting screen.

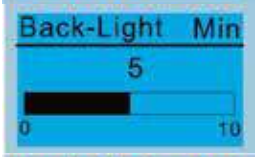

Press the Up / Down keys to adjust the setting value.

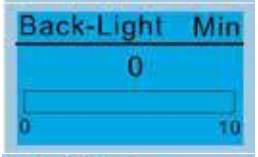

When the setting value is 0 Min, the backlight remains on.

When the setting value is 10 Min, the backlight turns off in 10 minutes.

3. Text Color

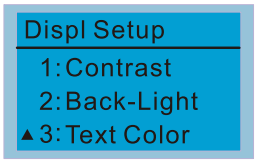

Press ENTER to go to the Text Color Setting screen.

The default value is White Text.

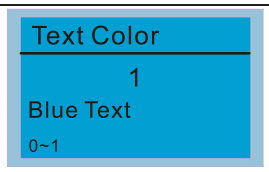

Press the Up / Down keys to adjust the setting value, and then press ENTER.

The setting value changes to Blue Text.

13. Start-up Menu

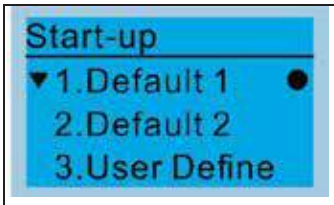

1. Default 1 DELTA LOGO

2. Default 2 DELTA Text

3. User-defined: an optional accessory is required (TPEditor & USB / RS-485 Communication Interface-IFD6530) to design your own start-up screen. If the editor accessory is not installed, the User Define option displays a blank screen.

USB/RS-485 Communication Interface-IFD6530
Refer to Chapter 07 Optional Accessories for more details.

TPEditor
Download the TPEditor software at Delta webside, select TPEditor version 1.60 and above. Refer to the installation instruction for TPEditor in Section 7-13-3.

14. Main page

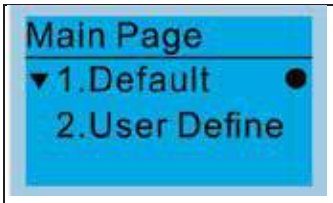

Default screen and editable screen are available upon selection .

Press ENTER to select.

1. Default page

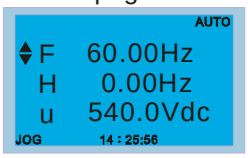

F 60.00 Hz >>> H >>> A >>> U (options rotate)

2. User Define: an optional accessory is required (TPEditor & USB / RS-485 Communication Interface-IFD6530) to design your own main screen. If the editor accessory is not installed, the User Define option displays a blank screen.

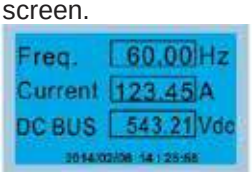

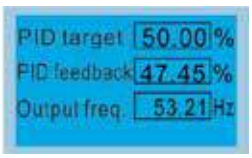

USB/RS-485 Communication Interface-IFD6530
Refer to Chapter 07 Optional Accessories for more details.

TPEditor
Download the TPEditor software at Delta website, select TPEditor version 1.60 or above. Refer to the installation instruction for TPEditor in Section 7-13-3.

15. PC Link

1. TPEditor: This function enables you to connect the keypad to a computer then to download and edit user-defined screens.

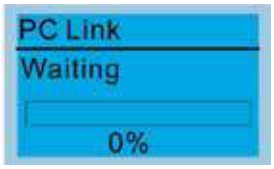

Press ENTER to go to the Waiting to connect to PC screen.

In TPEditor, from the **Communication** menu, then choose **Write to HMI**.

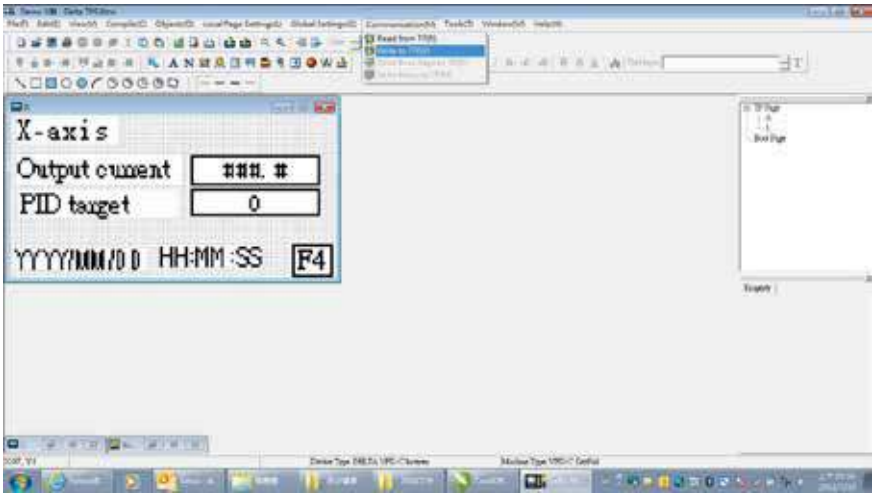

In the **Confirm** message box, click **YES**.

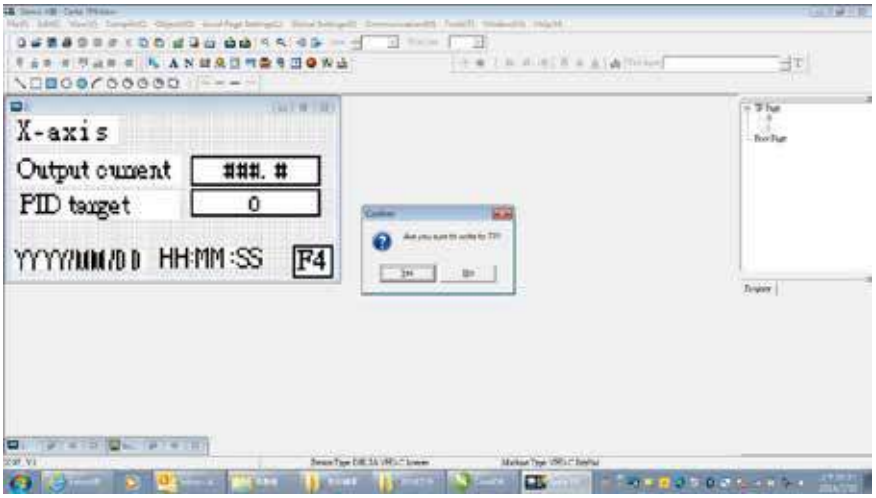

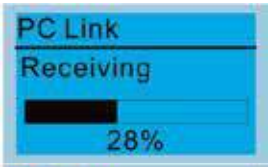

The software starts downloading screens to edit to the KPC-CC01.

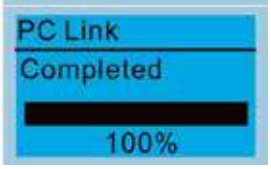

Download completed.

2. VFDSoft: this function enables you to link to the VFDSoft then upload the parameters 1–4 you have saved in KPC-CC01.

NOTE: In the Operation System (OS) of your computer is Windows 10, right-click the VFDSoft icon to enter the **Property**. Then click the **Compatibility** tab and select the **Run this program as an administrator** checkbox (as shown in the red frames in the figure below).

Connecting the KPC-CCO1 to a computer.

Select 2: VFDSoft, and then press ENTER.

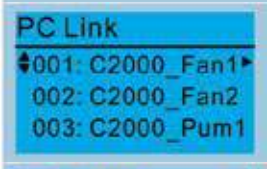

Press the Up / Down keys to select a parameter group to upload to VFDSoft.

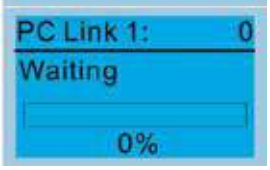

Press ENTER to go to Waiting to connect to PC screen.

Open VFDSoft and click **Parameter** on the toolbar.

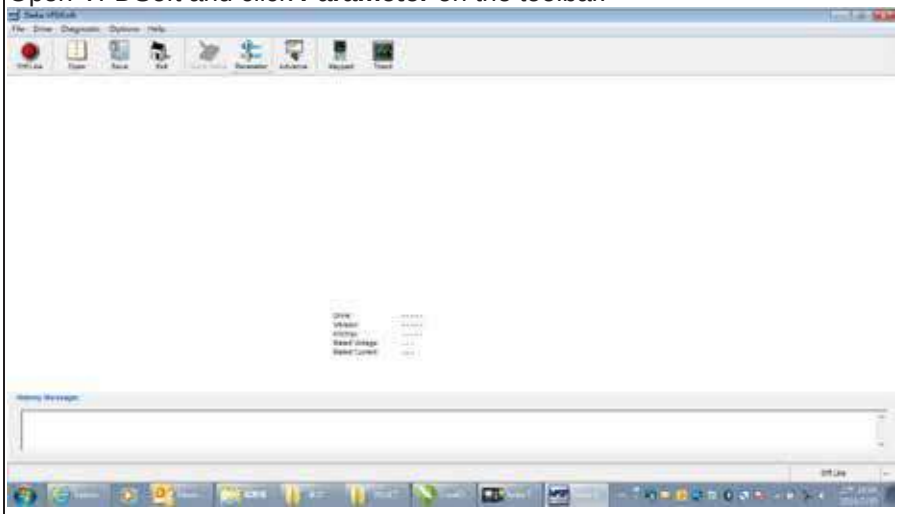

In the Parameter Management, from the **Table** menu, choose **Read from KPC-CC01**.

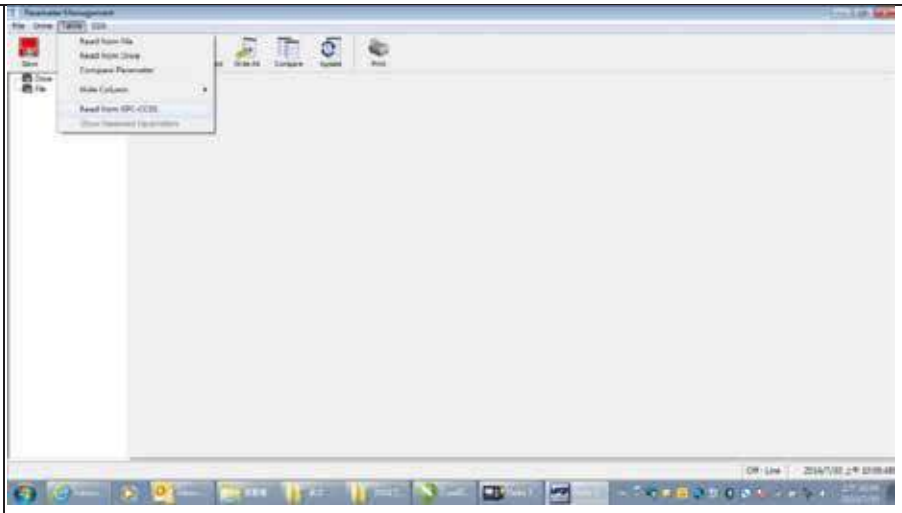

Choose the correct communication port and click **OK**.

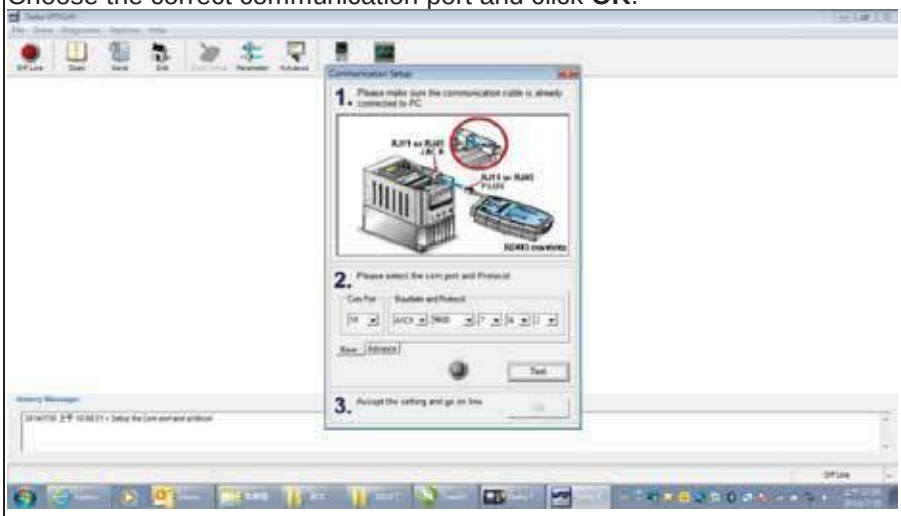

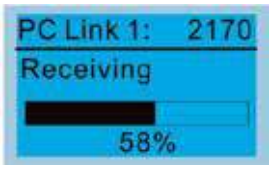

Start to upload parameters to VFDSoft.

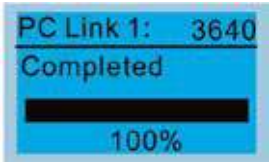

Uploading parameter is completed.

Before using the user-defined start-up screen and user-defined main screen, you must preset the start-up screen setup and the main screen as user-defined. If you do not download the user-defined screen to the KPC-CC01, the start-up screen and the main screen are blank.

16. Start Wizard (ME300 models do not support this function)

Other displays

When a fault occurs, the screen display shows the fault or warning.

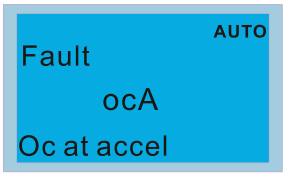

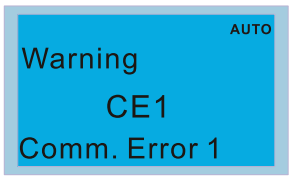

1. Press the RESET key to reset the fault code. If there is no response, contact your local distributor or return the unit to the factory. To view the fault DC bus voltage, output current and output voltage, press MENU and then choose 6: Fault Record.
2. After resetting, if the screen returns to the main screen and shows no fault after you press ESC, the fault is cleared.
3. When the fault or warning message appears, the LED backlight blinks until you clear the fault or warning.

Optional accessory: RJ45 Extension Lead for Digital Keypad

Part No.	Description
CBC-K3FT	RJ45 extension lead, 3 feet (approximately 0.9 m)
CBC-K5FT	RJ45 extension lead, 5 feet (approximately 1.5 m)
CBC-K7FT	RJ45 extension lead, 7 feet (approximately 2.1 m)
CBC-K10FT	RJ45 extension lead, 10 feet (approximately 3 m)
CBC-K16FT	RJ45 extension lead, 16 feet (approximately 4.9 m)

Note:
When you need communication cables, buy non-shielded, 24 AWG, four-wire twisted pair, 100 ohms communication cables.

7-13-3 TPEditor Installation Instruction

TPEditor can edit up to 256 HMI (Human-Machine Interface) pages with a total storage capacity of 256 KB. Each page can include 50 normal objects and 10 communication objects.

1. TPEditor: Setup & Basic Functions

(1) Run TPEditor version 1.60 or above by double-clicking the program icon.

(2) On the **File** menu, click **New**. In the **New Project** dialog box, for **Set Device Type**, select **DELTA VFD-C Inverter**. For **TP Type**, select **VFD-C KeyPad**. For **File Name**, enter TPE0 and then click **OK**.

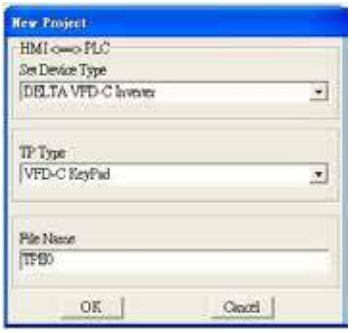

(3) The editor displays the Design window. On the **Edit** menu, click **Add a New Page**. You can also right-click on the TP page in the upper right corner of the Design window and click **Add** to add one more page(s) to edit.

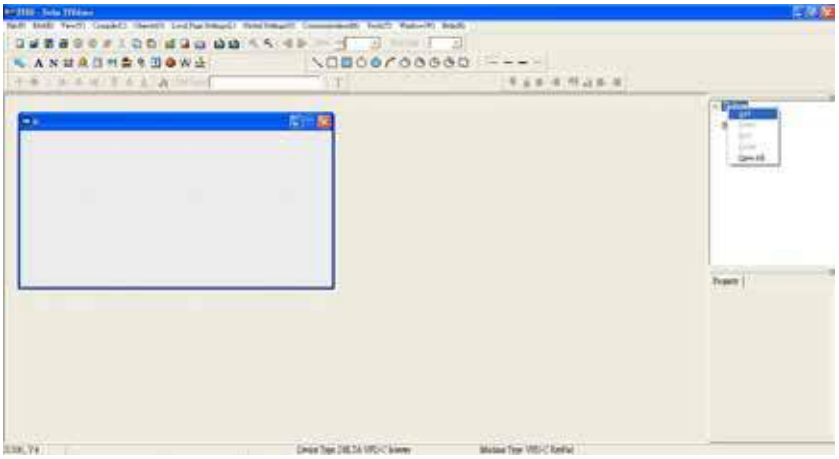

(4) Edit the Start-up screen.

(5) Add static text. Open a blank page (step 3), then on the toolbar click . Double-click the blank page to display the **Static Text Setting** dialog box, and then enter the static text.

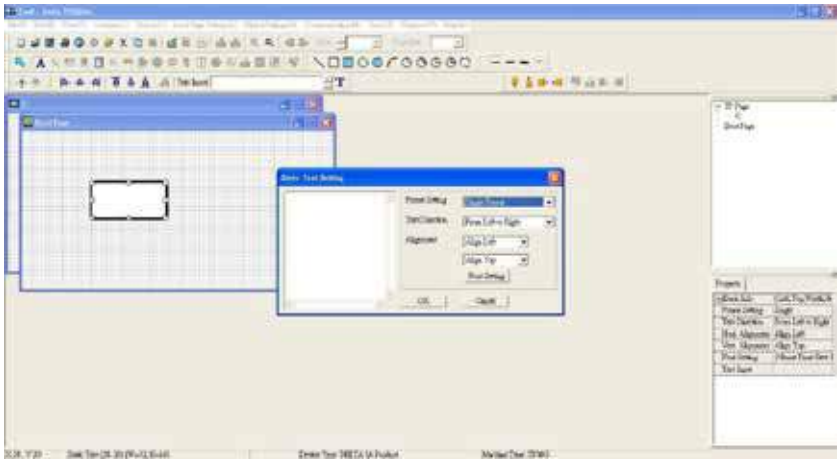

(6) Add a static bitmap. Open a blank page (step 3), then on the toolbar, click . Double-click the blank page to display the **Static Bitmap Setting** dialog box where you can choose the bitmap.

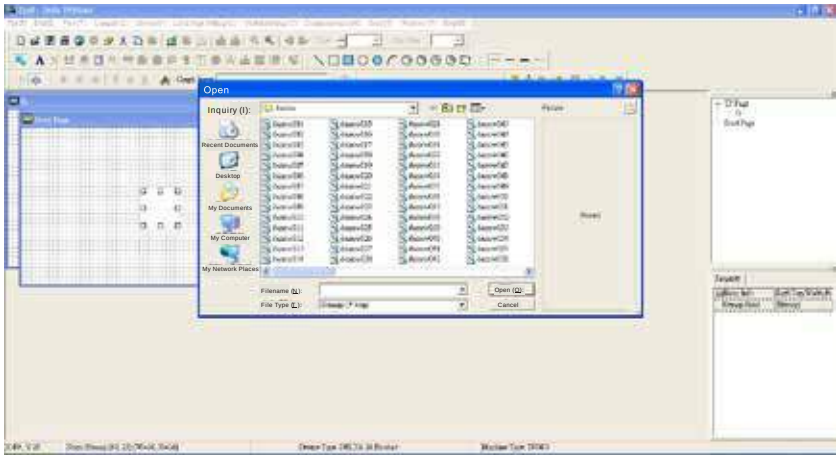

You can only use images in the BMP format. Click the image and then click **Open** to show the image in the page.

(7) Add a geometric bitmap. There are 11 kinds of geometric bitmaps to choose. Open a new blank page (step 3), then on the toolbar click the geometric bitmap icon that you need . In the page, drag the geometric bitmap and enlarge it to the size that you need.

(8) When you finish editing the Start-up screen, on the **Communication** menu, click **Input User Defined Keypad Starting Screen.**

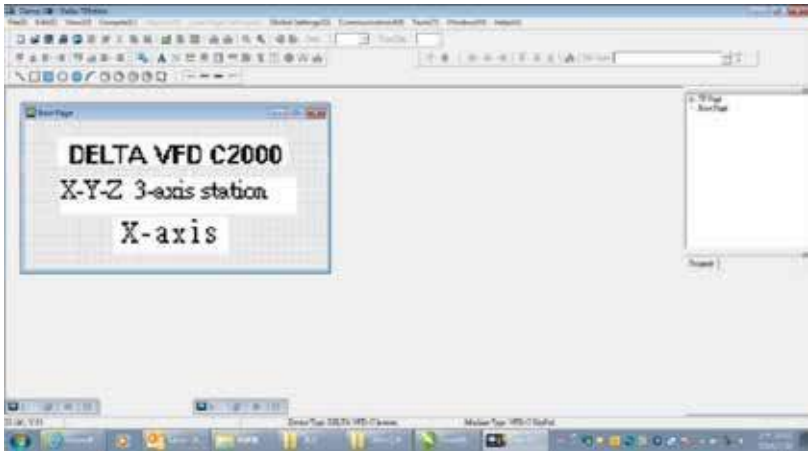

(9) Download the new setting: On the **Tool** menu, click **Communication**. Set up the communication port and speed for the IFD6530. There are only three speeds available: 9600 bps, 19200 bps and 38400 bps.

(10) On the **Communication** menu, click **Input User Defined Keypad Starting Screen**.

(11) The Editor displays a message asking you to confirm the new setting. Before you click **OK**, on the keypad, go to MENU, select PC LINK, press ENTER and then wait for few seconds. Then click **YES** in the confirmation dialog box to start downloading.

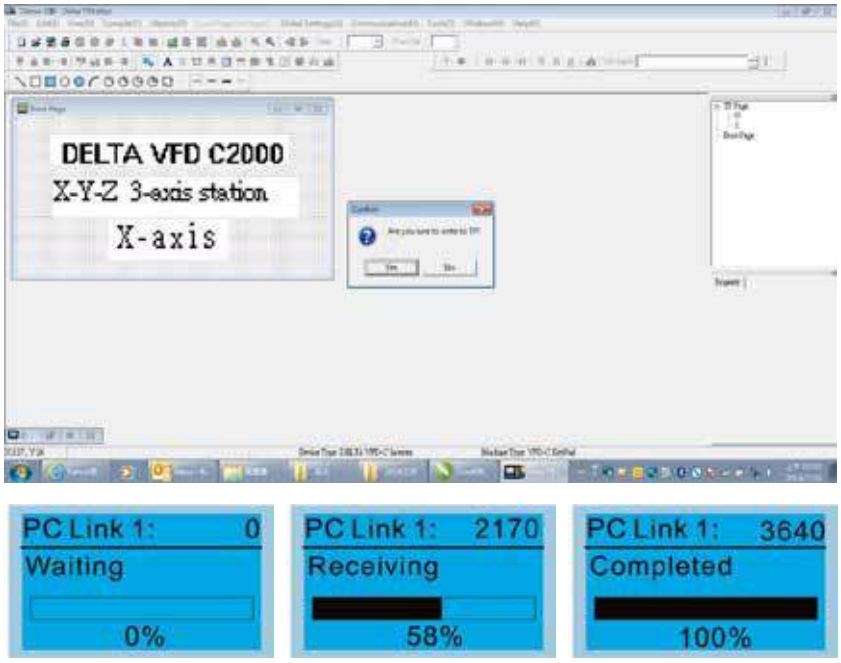

2. Edit the Main Page and Download to the Keypad

(1) In the Editor, add a page to edit. On the **Edit** menu, click **Add a New Page**. You can also right-click on the TP page in the upper right corner of the Design window and click **Add** to add one more pages to edit. This keypad currently supports up to 256 pages.

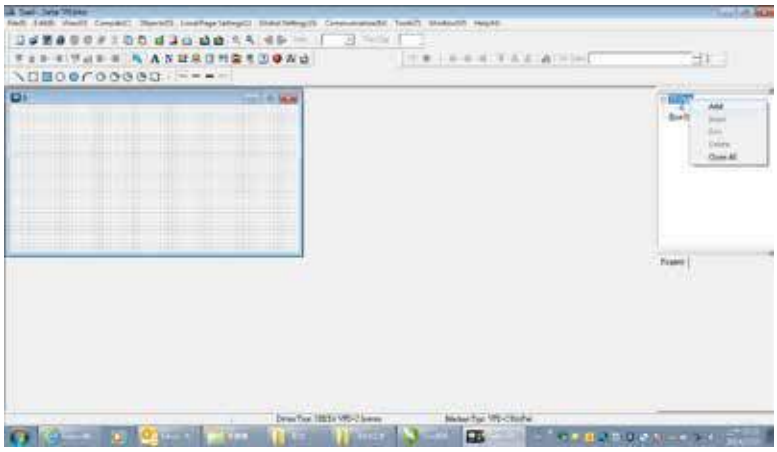

(2) In the bottom right-hand corner of the Editor, click the page number to edit, or on the **View** menu, click **HMI Page** to start editing the main page. As shown in the picture above, the following objects are available. From left to right they are: Static Text, ASCII Display, Static Bitmap, Scale, Bar Graph, Button, Clock Display, Multi-state bit map, Units, Numeric Input, the 11 geometric bitmaps, and lines of different widths. Use the same steps to add Static Text, Static Bitmap, and geometric bitmaps as for the Start-up page.

(3) Add a numeric/ASCII display. On the toolbar, click the **Numeric/ASCII** button. In the page, double-click the object to specify the **Refer Device**, **Frame Setting**, **Font Setting** and **Alignment**.

Click **[…]**. In the **Refer Device** dialog box, choose the VFD communication port that you need. If you want to read the output frequency (H), set the **Absolute Addr.** to 2202. For other values, refer to the ACMD Modbus Comm Address List (see Pr.09-04 in Chapter 12 Group 09 Communication Parameters).

(4) Scale Setting. On the toolbar, click to add a scale. You can also edit the Scale Setting in the Property Window on the right-hand side of your computer screen.

A. **Scale Position**: specifies where to place the scale.

B. **Scale Side**: specifies whether the scale is numbered from smaller numbers to larger numbers or from larger to smaller.

C. **Font Setting**: specifies the font.

D. **Value Length**: specifies 16 bits or 32 bits.

E. **Main Scale & Sub-Scale**: divides the whole scale into equal parts; enter the numbers for the main scale and sub-scale.

F. **Max. Value & Min. Value:** specifies the numbers on the two ends of the scale. They can be negative numbers, but the maximum and minimum values are limited by the **Value Length** setting. For example, when **Value Length** is **hexadecimal** (**16 bits**), the maximum and the minimum value cannot be entered as -40000.

Clicking **OK** creates a scale as in the picture below.

(5) Bar Graph setting. On the toolbar, click to add a bar graph.

A. **Refer Device**: specifies the VFD communication port.

B. **Direction Setting**: specifies the direction: **From Bottom to Top**, **From Top to Bottom**, **From Left to Right** or **From Right to Left**.

C. **Max. Value & Min. Value**: specifies the maximum value and minimum value. A value smaller than or equal to the minimum value causes the bar graph to be blank (0). A value is bigger or equal to the maximum value causes the bar graph is full (100%). A value between the minimum and maximum values causes the bar graph to be filled proportionally.

(6) Button: on the toolbar, click . Currently this function only allows the keypad to switch pages; other functions are not yet available (including text input and insert image). In the blank page, double-click to open the **Button Setting** dialog box.

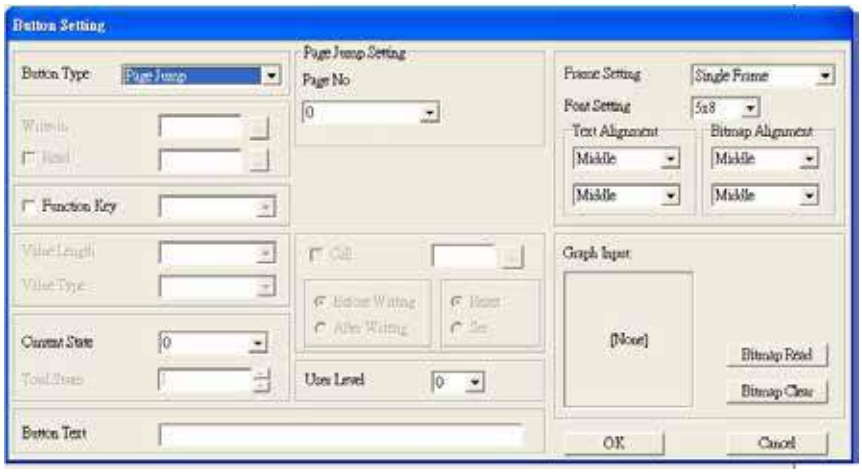

Button Type: specifies the buttons' functions.

Page Jump and **Constant Setting** are the only functions currently supported.

A. Page Jump Setting

- **Page Jump Setting**: in the **Button Type** list, choose **Page Jump** to show the **Page Jump Setting**.
- **Function Key**: specifies the functions for the following keys on the KPC-CC02 keypad: F1, F2, F3, F4, Up, Down, Left and Right. Note that the Up and Down keys are locked by TPEditor. You cannot program these two keys. If you want to program Up and Down keys, on the **Tool** menu, click **Function Key Setting**, and then click **Re-Define Up/Down Key**.

- **Button Text**: specifies the text that appears on a button. For example, when you enter Next Page for the button text, that text appears on the button.

B. Constant Setting

This function specifies the memory address' values for the VFD or PLC. When you press the **Function Key**, it writes a value to the memory address specified by the value for **Constant** Setting. You can use this function to initialize a variable.

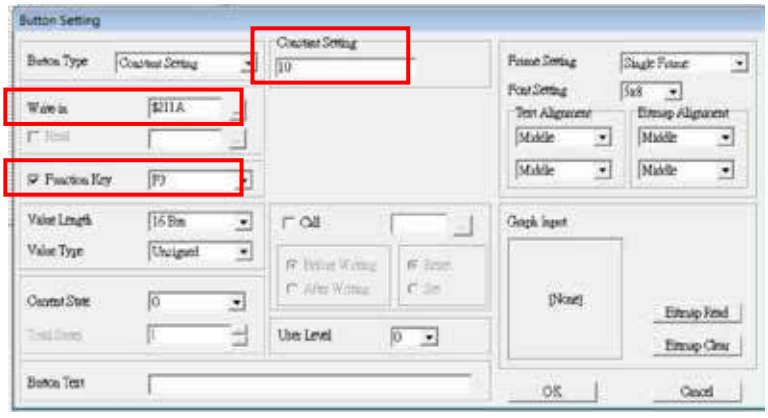

(7) Clock Display Setting: on the toolbar, click . You can display the time, day, or date on the keypad.

Open a new page and click once in that window to add a clock display.

Choose to display **Time**, **Day**, or **Date** on the keypad. To adjust time, go to #9 on the keypad's menu.

You can also specify the **Frame Setting**, **Font Setting**, and **Alignment**.

(8) Multi-state bitmap: on the toolbar, click . The setup window of the multi-state is shown as the image below. This object reads a bit's property value from the PLC (ME300 does not support the PLC function). It defines the image or text that appears when this bit is 0 or 1. Set the initial status (**Current State**) to be 0 or 1 to define the displayed image or text.

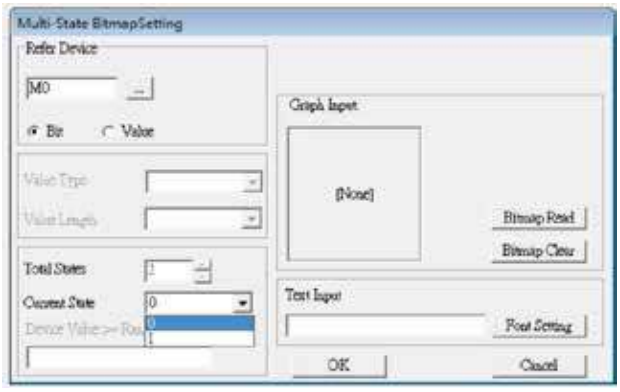

(9) Unit Measurement: on the toolbar, click .

Open a new blank page, and double-click on that window to display the **Units Setting** dialog box.

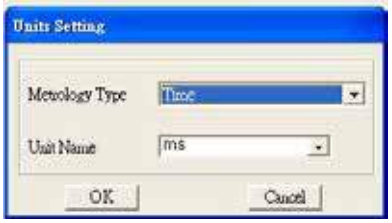

Choose the **Metrology Type** and the **Unit Name**. For **Metrology**, the choices are Length, Square Measure, Volume/Solid Measure, Weight, Speed, Time, and Temperature. The unit name changes automatically when you change metrology type.

(10) Numeric Input Setting: on the toolbar, click .

This object allows you to provide parameters or communication ports and to input numbers.

Open a new file and double-click on that window to display the **Numeric Input Setting** dialog box.

A. **Refer Device**: specifies the **Write** and the **Read** values. Enter the numbers to display and the corresponding parameter and communication port numbers. For example, enter 012C to Read and Write Parameter Pr.01-44.

B. **OutLine Setting**: specifies the **Frame Setting**, **Font Setting**, **Hori. Alignment** and **Vert. Alignment** for the outline.

C. **Function key**: specifies the function key to program on the keypad in the **Function Key** box. The corresponding key on the keypad starts to blink. Press ENTER to confirm the setting.

D. **Value Type** & **Value Length**: specify the range of the **Min. Value** and **Max. Value** for the **Limit Setting**.

E. **Value Setting**: automatically set by the keypad itself.

F. **Limit Setting: specifies the range for the numeric input here.**

G. For example, if you set **Function Key** to **F1**, **Min. Value** to 0 and **Max. Value** to 4, when you press F1 on the keypad, then you can press Up/Down on the keypad to increase or decrease the value. Press ENTER on the keypad to confirm your setting. You can also view the parameter table 01-44 to verify if you correctly entered the value.

(11) **Download TP Page**: Press Up/Down keys on the keypad to select #13 PC Link.

Then press ENTER on the keypad. The screen displays “Waiting”. In TPEditor, choose a page that you have created, and then on the **Communication** menu click **Write to TP** to start downloading the page to the keypad.

When you see “Completed” on the keypad screen, the download is finished. You can then press ESC on the keypad to return to the menu screen.

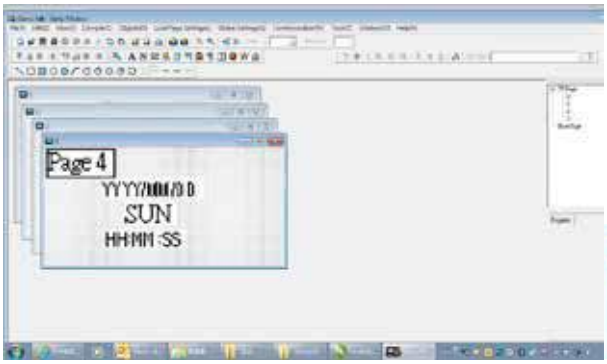

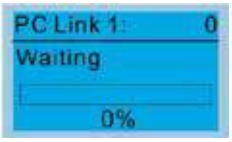

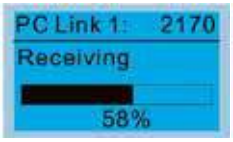

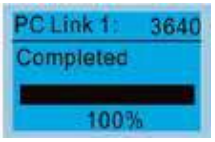

7-13-4 Digital Keypad KPC-CC01 Fault Codes and Descriptions

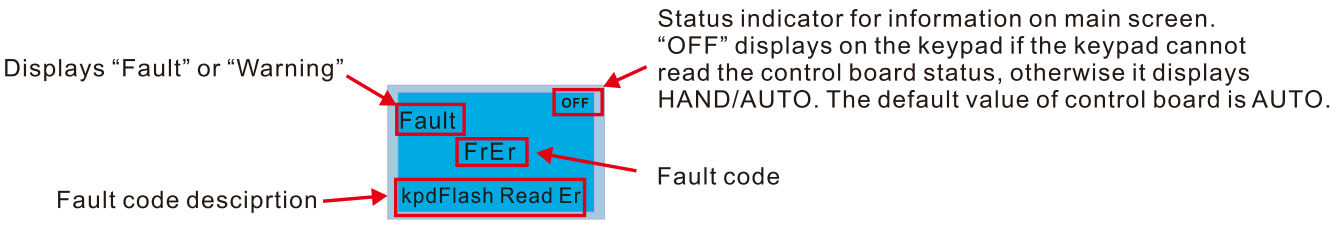

Fault Codes

LCD Display *	Fault Name	Description	Corrective Actions
	Flash memory read error (FrEr)	Keypad flash memory read error	Error in the keypad’s flash memory. 1. Press RESET to clear the errors. 2. Check for any problem on Flash IC. 3. Shut down the system, wait for ten minutes, and then restart the system. If none of the above solutions work, contact your authorized local dealer for assistance.
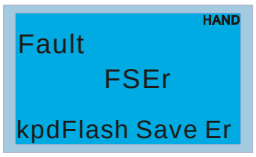	Flash memory save error (FsEr)	Keypad flash memory save error	Error in the keypad’s flash memory. 1. Press RESET to clear the errors. 2. Check for any problem on Flash IC. 3. Shut down the system, wait for ten minutes, and then restart the system. If none of the above solutions work, contact your authorized local dealer for assistance.
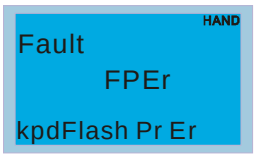	Flash memory parameter error (FPEr)	Keypad flash memory parameter error	Error in the default parameters. It might be caused by a firmware update. 1. Press RESET to clear the errors. 2. Check for any problem on Flash IC. 3. Shut down the system, wait for ten minutes, and then restart the system. If none of the above solutions work, contact your local authorized dealer for assistance.
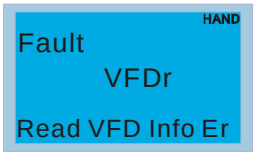	Reading AC motor drive data error (VFDr)	Keypad error when reading AC drive data	Keypad cannot read any data sent from the drive. 1. Verify that the keypad is properly connected to the motor drive by a communication cable such as RJ45. 2. Press RESET to clear the errors. 3. Shut down the system, wait for ten minutes, and then restart the system. If none of the above solutions work, contact your local authorized dealer for assistance.
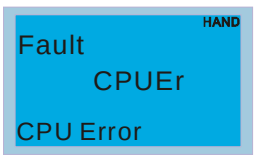	CPU error (CPUEr)	Keypad CPU error	A serious error in the keypad’s CPU. 1. Check for any problem on CPU clock. 2. Check for any problem on Flash IC. 3. Check for any problem on RTC IC. 4. Verify that the communication quality of the RS-485 cable is good. 5. Shut down the system, wait for ten minutes, and then restart the system. If none of the above solutions work, contact your local authorized dealer for assistance.

Warning Codes

LCD Display *	Warning Name	Description	Corrective Actions
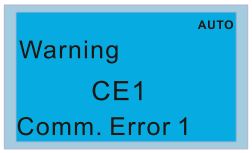	Commuication error 1 (CE1)	RS-485 Modbus illegal function code	Motor drive does not accept the communication command from the keypad. 1. Verify that the keypad is properly connected to the motor drive by a communication cable such as RJ45. 2. Press RESET to clear the errors. If none of the above solutions work, contact your local authorized dealer for assistance.
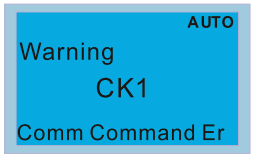	Communication command error 1 (CK1)	Keypad communication data, illegal function code (Keypad auto-detect this error and display it)	Keypad does not accept the motor drive's communication command. 1. Remove the keypad and reconnect it. 2. Verify if the Baud rate = 19200 bps, and the Format = RTU8, N, 2 3. Verify if the keypad is properly connected to the motor drive on the communication contact by a communication cable such as RJ45. If none of the above solution works, contact your local authorized dealer.
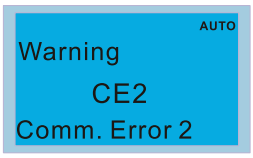	Communication error 2 (CE2)	RS-485 Modbus illegal data address	Motor drive does not accept the keypad's communication address. 1. Verify that the keypad is properly connected to the motor drive by a communication cable such as RJ45. 2. Press RESET to clear the errors. If none of the above solutions work, contact your local authorized dealer for assistance.
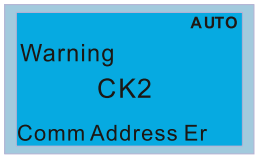	Communication address error (CK2)	Keypad communication data, illegal data address (Keypad auto-detect this error and display it)	Keypad does not accept the motor drive's communication command. 1. Remove the keypad and reconnect it. 2. Verify if the Baud rate = 19200 bps, and the Format = RTU8, N, 2 3. Verify if the keypad is properly connected to the motor drive on the communication contact by a communication cable such as RJ45. If none of the above solution works, contact your local authorized dealer.
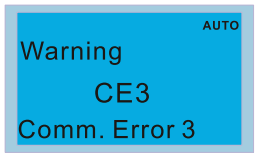	Communication error 3 (CE3)	RS-485 Modbus illegal data value	Motor drive does not accept the communication data from the keypad. 1. Verify that the keypad is properly connected to the motor drive by a communication cable such as RJ45. 2. Press RESET to clear the errors. If none of the above solutions work, contact your local authorized dealer for assistance.
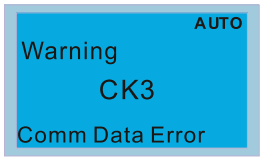	Communication data error (CK3)	Keypad communication data, illegal data value (Keypad auto-detect this error and display it)	Keypad does not accept the motor drive's communication command. 1. Remove the keypad and reconnect it. 2. Verify if the Baud rate = 19200 bps, and the Format = RTU8, N, 2 3. Verify if the keypad is properly connected to the motor drive on the communication contact by a communication cable such as RJ45. If none of the above solution works, contact your local authorized dealer.

LCD Display *	Warning Name	Description	Corrective Actions
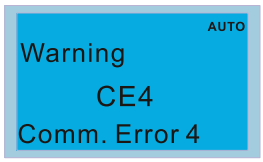	Communication error 4 (CE4)	RS-485 Modbus data is written to read-only address	Motor drive cannot process the communication command from the keypad. 1. Verify that the keypad is properly connected to the motor drive by a communication cable such as RJ45. 2. Press RESET to clear the errors. 3. Shut down the system, wait for ten minutes, and then restart the system. If none of the above solutions work, contact your local authorized dealer for assistance.
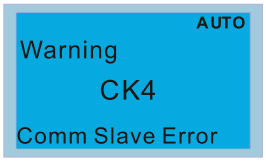	Communication slave error (CK4)	Keypad communication data is written to read-only address (Keypad auto-detect this error and display it)	Keypad does not accept the motor drive's communication command. 1. Remove the keypad and reconnect it. 2. Verify if the Baud rate = 19200 bps, and the Format = RTU8, N, 2 3. Verify if the keypad is properly connected to the motor drive on the communication contact by a communication cable such as RJ45. If none of the above solution works, contact your local authorized dealer.
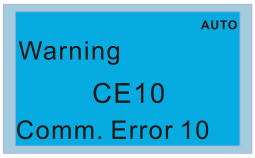	Communication error 10 (CE10)	RS-485 Modbus transmission time-Out	Motor drive does not respond to the communication command from the keypad. 1. Verify that the keypad is properly connected to the motor drive by a communication cable such as RJ45. 2. Press RESET to clear the errors. 3. Shut down the system, wait for ten minutes, and then restart the system. If none of the above solutions work, contact your local authorized dealer for assistance.
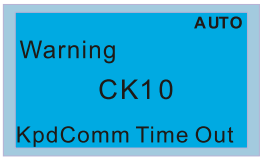	Keypad communication time out (CK10)	Keypad communication data, transmission time-out (Keypad auto-detect this error and display it).	Keypad does not accept the motor drive's communication command. 1. Remove the keypad and reconnect it. 2. Verify if the Baud rate = 19200 bps, and the Format = RTU8, N, 2 3. Verify if the keypad is properly connected to the motor drive on the communication contact by a communication cable such as RJ45. If none of the above solution works, contact your local authorized dealer.
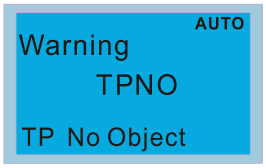	Keypad communication time out (CK10)	Object not supported by TPEditor	Keypad's TPEditor uses an unsupported object. 1. Verify that the TPEditor is not using an unsupported object or setting. Delete unsupported objects and unsupported settings. 2. Re-edit the object in the TPEditor, and then download it to the keypad. 3. Verify that the motor drive supports the TP functions. If the drive does not support TP function, the main screen displays Default. If none of the above solutions work, contact your local authorized dealer for assistance.

NOTE:

The warning code CExx only occurs when the communication problem is between the drive and the keypad. It has nothing to do with the drive and other devices. Note the warning code description to find the cause of the error if CExx appears.

File Copy Setting Fault Description

These faults occur when KPC-CC01 cannot perform the command after clicking the ENTER key in the copy function.

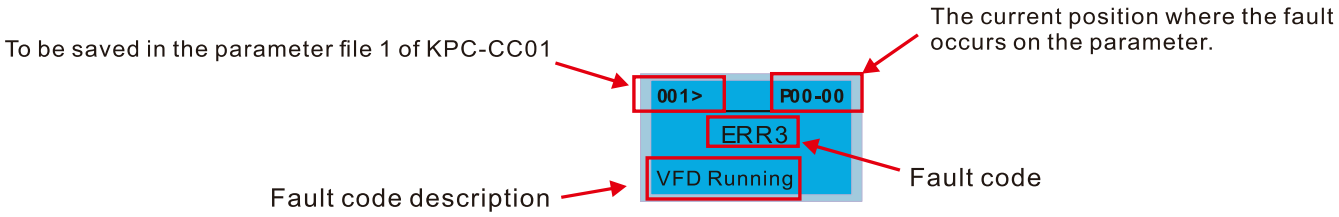

LCD Display *	Fault Name	Description	Corrective Actions
001> P00-00 ERR1 Read Only	Read only (ERR1)	Parameter and file are read-only	The property of the parameter / file is read-only and cannot be written to. 1. Verify the specification in the user manual. If this solution does not work, contact your local authorized dealer for assistance.
001> P00-00 ERR2 Write Fail	Write in error (ERR2)	Fail to write parameter and file	An error occurred while writing to a parameter / file. 1. Check for any problem on the Flash IC. 2. Shut down the system, wait for ten minutes, and then restart the system. If none of the above solutions work, contact your local authorized dealer for assistance.
001> P00-00 ERR3 VFD Running	Drive operating (ERR3)	AC drive is in operating status	A setting cannot be changed while motor drive is in operation. 1. Verify that the drive is not in operation. If this solution does not work, contact your local authorized dealer for assistance.
001> P00-00 ERR4 Pr Lock	Parameter locked (ERR4)	AC drive parameter is locked	A setting cannot be changed because a parameter is locked. 1. Check if the parameter is locked or not. If it is locked, unlock it and try to set the parameter again. If this solution does not work, contact your local authorized dealer for assistance.
001> P00-00 ERR5 Pr Changing	Parameter changing (ERR5)	AC drive parameter changing	A setting cannot be changed because a parameter is being modified. 1. Check if the parameter is being modified. If it is not being modified, try to change that parameter again. If this solution does not work, contact your local authorized dealer for assistance.
001> P00-00 ERR6 Fault Code	Fault code (ERR6)	Fault code	A setting cannot be changed because an error has occurred in the motor drive. 1. Check if an error occurred in the motor drive. If there is no error, try to change the setting again. If this solution does not work, contact your local authorized dealer for assistance.
001> P00-00 ERR7 Warning Code	Warning code (ERR7)	Warning code	A setting cannot be changed because of a warning message given to the motor drive. 1. Check if there is a warning message given to the motor drive. If this solution does not work, contact your local authorized dealer for assistance.

LCD Display *	Fault Name	Description	Corrective Actions
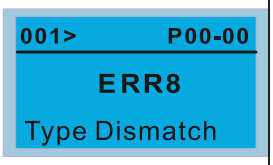	File type mismatch (ERR8)	File type mismatch	Data to be copied are not the correct type, so the setting cannot be changed. 1. Check if the products' serial numbers to be copied are in the same category. If they are in the same category, try to copy the setting again. If this solution does not work, contact your authorized dealer for assistance.
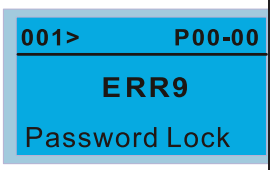	Password locked (ERR9)	File is locked with password	A setting cannot be changed because some data are locked. 1. Check if the data are unlocked or able to be unlocked. If the data are unlocked, try to change the setting again. 2. Shut down the system, wait for ten minutes, and then restart the system. If none of the above solutions works, contact your local authorized dealer for assistance.
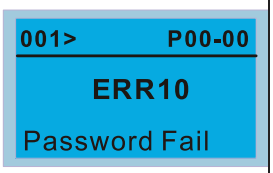	Password fail (ERR10)	File password failure	A setting cannot be changed because the password is incorrect. 1. Check if the password is correct. If the password is correct, try to change the setting again. 2. Shut down the system, wait for ten minutes, and then restart the system. If none of the above solutions works, contact your local authorized dealer for assistance
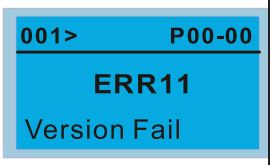	Version fail (ERR11)	File version mismatch	A setting cannot be changed because the version of the data is incorrect. 1. Check if the version of the data matches the motor drive. If it matches, try to change the setting again. If this solution does not work, contact your local authorized dealer for assistance.
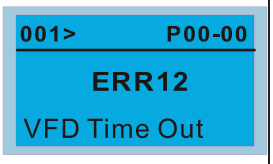	VFD Time out (ERR12)	AC drive copy function time-out	A setting cannot be changed because the data copying time-out expired. 1. Try copying the data again. 2. Check if copying data is authorized. If it is authorized, try to copy the data again. 3. Shut down the system, wait for ten minutes, and then restart the system. If none of the above solutions works, contact your local authorized dealer for assistance.

※ The content in this chapter only applies to KPC-CC01 keypad V1.01 and later version(s).

7-13-5 Unsupported Functions when Using TPEditor with the KPC-CC01

1. **Local Page Setting** and **Global Setting** functions are not supported.

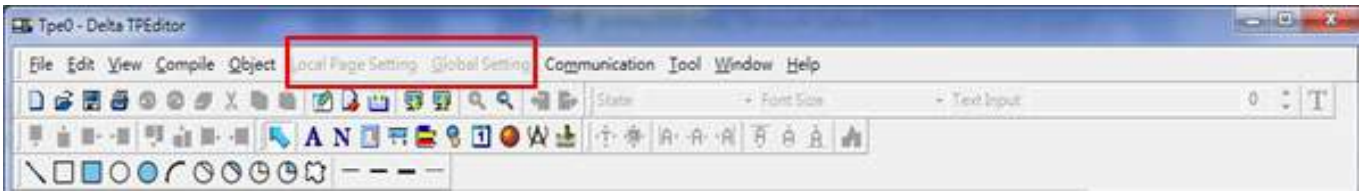

2. In the **Communication** menu, **Read from TP** function is not supported.

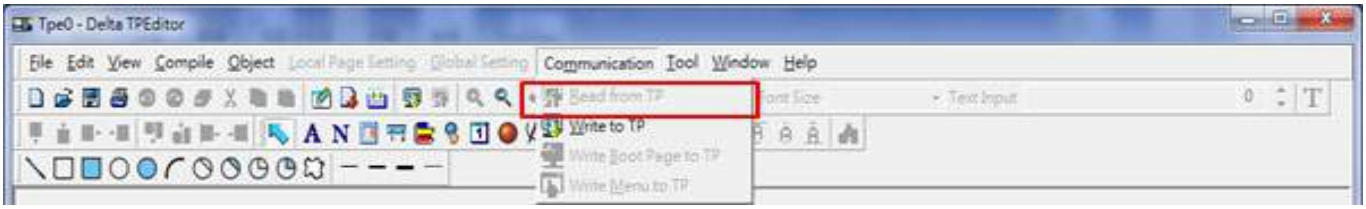

3. In the **RTC Display Setting**, you cannot change the **Refer Device**.

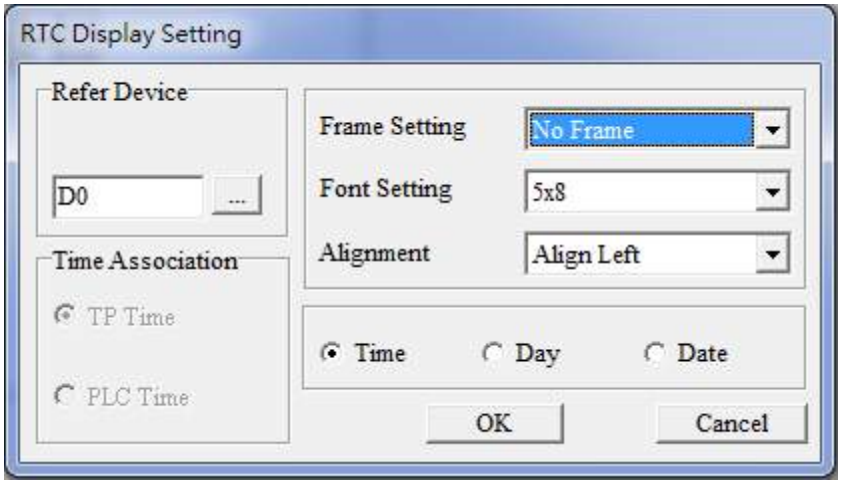

Chapter 8 Option Cards

This models do not support Option Cards

[This page intentionally left blank]

Chapter 9 Specification

9-1 115V Models

9-2 230V Models

9-3 460V Models

9-4 General Specifications

9-5 Environment for Operation, Storage and Transportation

9-6 Derating for Ambient Temperature, Altitude and Carrier Frequency

9-1 115V Models

115V, one-phase

Frame			A			C
Model VFD_ _ _ ME11[_ _]AA			0A8	1A6	2A5	4A8
			[ANN] [ANS]	[ANN] [ANS]	[ANN] [ANS]	[ANN] [ANS]
Applicable Motor Output (kW)			0.1	0.2	0.4	0.75
Applicable Motor Output (HP)			1/8	1/4	1/2	1
Output Rating	Heavy duty	Rated Output Capacity (kVA)	0.4	0.6	1.0	1.8
		Rated Output Current (A)	0.8	1.6	2.5	4.8
		Carrier Frequency (kHz)	2–15			
	Normal Duty	Rated Output Capacity (kVA)	0.4	0.7	1.0	2.1
		Rated Output Current (A)	1.0	1.8	2.7	5.5
		Carrier Frequency (kHz)	2–15			
Input Rating	Rated Input Current (A)	Heavy Duty	3.0	6.0	9.4	18
		Normal Duty	3.7	6.8	10.1	20.6
	Rated Voltage / Frequency		One-phase AC 100–120 V (-15– +10%), 50/60 Hz			
	Operating Voltage Range (V_{AC})		85–132			
	Frequency Range (Hz)		47–63			
Weight (kg)			0.4	0.4	0.5	1
Cooling Method			Convective cooling			Fan cooling
EMC Filter			Optional			
Ingress Protection Rating			IP20			

Table 9-1

NOTE:

1. Default: heavy duty.
2. The value of the carrier frequency is set in the factory. To increase the carrier frequency, decrease the current. See the derating curve diagram in Section 9-6 for more information.
3. When the load is a shock or impact load, use a higher level model.

9-2 230V Models

230V, one-phase

Frame			A		B		A		B		A		B	
Model VFD_ _ _ ME21 [_ _ _]AA			0A8				1A6				2A8			
			ANN	ANS	AFN	AFS	ANN	ANS	AFN	AFS	ANN	ANS	AFN	AFS
Applicable Motor Output (kW)			0.1				0.2				0.4			
Applicable Motor Output (HP)			1/8				1/4				1/2			
Output Rating	Heavy duty	Rated Output Capacity (kVA)	0.3				0.6				1.1			
		Rated Output Current (A)	0.8				1.6				2.8			
		Carrier Frequency (kHz)	2–15											
	Normal Duty	Rated Output Capacity (kVA)	0.4				0.7				1.2			
		Rated Output Current (A)	1.0				1.8				3.2			
		Carrier Frequency (kHz)	2–15											
Input Rating	Rated Input Current (A)	Heavy Duty	2.2				3.4				5.9			
		Normal Duty	2.8				3.8				6.7			
	Rated Voltage / Frequency		One-phase AC 200–240 V (-15– +10%), 50/60 Hz											
	Operating Voltage Range (V_{AC})		170–265											
	Frequency Range (Hz)		47–63											
Weight (kg)			0.4		0.9		0.4		0.9		0.5		0.9	
Cooling Method			Convective cooling						Fan cooling					
EMC Filter			Optional		Built-in		Optional		Built-in		Optional		Built-in	
Ingress Protection Rating			IP20											

Frame			B				C							
Model VFD_ _ _ ME21 [_ _ _]AA			4A8				7A5				11A			
			ANN	ANS	AFN	AFS	ANN	ANS	AFN	AFS	ANN	ANS	AFN	AFS
Applicable Motor Output (kW)			0.75				1.5				2.2			
Applicable Motor Output (HP)			1				2				3			
Output Rating	Heavy duty	Rated Output Capacity (kVA)	1.8				2.9				4.2			
		Rated Output Current (A)	4.8				7.5				11			
		Carrier Frequency (kHz)	2–15											
	Normal Duty	Rated Output Capacity (kVA)	1.9				3.2				4.8			
		Rated Output Current (A)	5				8.5				12.5			
		Carrier Frequency (kHz)	2–15											
Input Rating	Rated Input Current (A)	Heavy Duty	10.1				15.8				23.1			
		Normal Duty	10.5				17.9				26.3			
	Rated Voltage / Frequency		One-phase AC 200–240 V (-15– +10%), 50/60 Hz											
	Operating Voltage Range (V_{AC})		170–265											
	Frequency Range (Hz)		47–63											
Weight (kg)			0.8		0.9		1		1.5		1		1.5	
Cooling Method			Convective cooling						Fan cooling					
EMC Filter			Optional		Built-in		Optional		Built-in		Optional		Built-in	
Ingress Protection Rating			IP20											

Table 9-2

NOTE:

1. Default: heavy duty.
2. The value of the carrier frequency is set in the factory. To increase the carrier frequency, decrease the current. See the derating curve diagram in Section 9-6 for more information.
3. When the load is a shock or impact load, use a higher level model.

230V, three-phase

Frame				A			
Model VFD_ _ _ ME23[ ][ ][ ]AA				0A8	1A6	2A8	4A8
				ANN ANS	ANN ANS	ANN ANS	ANN ANS
Applicable Motor Output (kW)				0.1	0.2	0.4	0.75
Applicable Motor Output (HP)				1/8	1/4	1/2	1
Output Rating	Heavy duty	Rated Output Capacity (kVA)		0.3	0.6	1.1	1.8
		Rated Output Current (A)		0.8	1.6	2.8	4.8
		Carrier Frequency (kHz)		2–15			
	Normal Duty	Rated Output Capacity (kVA)		0.4	0.7	1.2	1.9
		Rated Output Current (A)		1.0	1.8	3.2	5
		Carrier Frequency (kHz)		2–15			
Input Rating	Rated Input Current (A)		Heavy Duty	2.2	1.9	3.4	5.8
			Normal Duty	2.8	2.2	3.8	6.0
	Rated Voltage / Frequency			Three-phase AC 200–240 V (-15– +10%), 50/60 Hz			
	Operating Voltage Range (V_{AC})			170–265			
	Frequency Range (Hz)			47–63			
Weight (kg)				0.4	0.4	0.45	0.6
Cooling Method				Convective cooling			
EMC Filter				Optional			
Ingress Protection Rating				IP20			

Frame				B	C		D
Model VFD_ _ _ ME23[ ][ ][ ]AA				7A5	11A	17A	25A
				ANN ANS	ANN ANS	ANN ANS	ANN ANS
Applicable Motor Output (kW)				1.5	2.2	3.7 / 4	5.5
Applicable Motor Output (HP)				2	3	5	7.5
Output Rating	Heavy duty	Rated Output Capacity (kVA)		2.9	4.2	6.5	9.5
		Rated Output Current (A)		7.5	11	17	25
		Carrier Frequency (kHz)		2–15			
	Normal Duty	Rated Output Capacity (kVA)		3.0	4.8	7.4	10.3
		Rated Output Current (A)		8.0	12.5	19.5	27
		Carrier Frequency (kHz)		2–15			
Input Rating	Rated Input Current (A)		Heavy Duty	9.0	13.2	20.4	30
			Normal Duty	9.6	15	23.4	32.4
	Rated Voltage / Frequency			Three-phase AC 200–240 V (-15– +10%), 50/60 Hz			
	Operating Voltage Range (V_{AC})			170–265			
	Frequency Range (Hz)			47–63			
Weight (kg)				0.8	1	1	2
Cooling Method				Fan cooling			
EMC Filter				Optional			
Ingress Protection Rating				IP20			

Table 9-3

NOTE:

1. Default: heavy duty.
2. The value of the carrier frequency is set in the factory. To increase the carrier frequency, decrease the current. See the derating curve diagram in Section 9-6 for more information.
3. When the load is a shock or impact load, use a higher level model.

9-3 460V Models

460V, three-phase

Frame			A		B		A		B		B		C	
Model VFD_ _ _ ME43 ___AA			1A5				2A7				4A2				5A5			
			ANN	ANS	AFN	AFS	ANN	ANS	AFN	AFS	ANN	ANS	AFN	AFS	ANN	ANS	AFN	AFS
Applicable Motor Output (kW)			0.4				0.75				1.5				2.2			
Applicable Motor Output (HP)			1/2				1				2				3			
Output Rating	Heavy duty	Rated Output Capacity (kVA)	1.1				4.2				3.2				4.2			
		Rated Output Current (A)	1.5				2.7				4.2				5.5			
		Carrier Frequency (kHz)	2–15															
	Normal Duty	Rated Output Capacity (kVA)	1.4				2.3				3.5				5.0			
		Rated Output Current (A)	1.8				3				4.6				6.5			
		Carrier Frequency (kHz)	2–15															
Input Rating	Rated Input Current (A)	Heavy Duty	1.7				3.0				4.6				6.1			
		Normal Duty	2.0				3.3				5.1				7.2			
	Rated Voltage / Frequency		Three-phase AC 380V–480V (-15 %~+10 %), 50/60 Hz															
	Operating Voltage Range (V_{AC})		323–528															
	Frequency Range (Hz)		47–63															
Weight (kg)			0.55		0.9		0.7		0.9		0.8		0.9		1		1.5	
Cooling Method			Convective cooling		Fan cooling		Convective cooling		Fan cooling									
EMC Filter			Optional		Built-in		Optional		Built-in		Optional		Built-in		Optional		Built-in	
Ingress Protection Rating			IP20															

Frame			C				D			
Model VFD_ _ _ ME43 ___AA			7A3				9A0				13A				17A			
			ANN	ANS	AFN	AFS	ANN	ANS	AFN	AFS	ANN	ANS	AFN	AFS	ANN	ANS	AFN	AFS
Applicable Motor Output (kW)			3				3.7 / 4				5.5				7.5			
Applicable Motor Output (HP)			4				5				7.5				10			
Output Rating	Heavy duty	Rated Output Capacity (kVA)	5.6				6.9				9.9				13			
		Rated Output Current (A)	7.3				9				13				17			
		Carrier Frequency (kHz)	2–15															
	Normal Duty	Rated Output Capacity (kVA)	6.1				8.0				12				15.6			
		Rated Output Current (A)	8				10.5				15.7				20.5			
		Carrier Frequency (kHz)	2–15															
Input Rating	Rated Input Current (A)	Heavy Duty	8.1				9.9				14.3				18.7			
		Normal Duty	8.9				11.6				17.3				22.6			
	Rated Voltage / Frequency		Three-phase AC 380V–480V (-15 %~+10 %), 50/60 Hz															
	Operating Voltage Range (V_{AC})		323–528															
	Frequency Range (Hz)		47–63															
Weight (kg)			1		1.5		1		1.5		2		2.7		2		2.7	
Cooling Method			Fan cooling															
EMC Filter			Optional		Built-in		Optional		Built-in		Optional		Built-in		Optional		Built-in	
Ingress Protection Rating			IP20															

Table 9-4

NOTE:

1. Default: heavy duty.
2. The value of the carrier frequency is set in the factory. To increase the carrier frequency, decrease the current. See the derating curve diagram in Section 9-6 for more information.
3. When the load is a shock or impact load, use a higher level model.

9-4 General Specifications

Control Characteristics	Control Method	V/F, SVC
	Applied Motor	IM (Induction Motor), PM motor control (IPM and SPM)
	Max. Output Frequency	0.00–599.00 Hz
	Starting Torque [Note]	150% / 3 Hz (V/F, SVC for IM, Heavy duty) 100% / (1/20 of motor rated frequency) (SVC control for PM, Heavy duty)
	Speed Control Range [Note]	1: 5 (V/F, SVC for IM, Heavy duty) 1: 20 (SVC control for PM, Heavy duty)
	Overload Capability	● Normal duty: 120% of rated current can endure for 1 minute during every 5 minutes 150% of rated current can endure for 3 seconds during every 36 seconds. ● Heavy duty: 150% of rated current can endure for 1 minute during every 5 minutes 200% of rated current can endure for 3 seconds during every 36 seconds
	Frequency Setting Signal	0–10 V / 4(0)–20 mA PWM pulse width input, pulse input (10 kHz).
	Main Function	Multiple motor switches (Two independent motor parameter settings), Fast start-up, Deceleration Energy Back (DEB) function, Fast deceleration function, Master and Auxiliary frequency source selectable, Momentary power loss ride thru, Speed search, Over-torque detection, Torque limit, 16-step speed (max.), Accel. / decel. time switch, S-curve accel. / decel., three-wire sequence, JOG frequency, Upper / lower limits for frequency reference, DC injection braking at start and stop, PID control, Positioning function.
	Application Macro	Built-in application parameter groups (selected by industry) and user-defined application parameter groups.
Protection Characteristics	Motor Protection	Over-current, Over-voltage, Over-temperature, Phase loss, Over-load
	Stall Prevention	Stall prevention during acceleration, deceleration and running (independent settings)
Accessory		STO (Safe Torque Off) card
Certifications		UL, CE, RCM, TÜV (SIL 2), RoHS, REACH, KC

Table 9-5

NOTE:

Control accuracy may vary depending on the environment, application conditions or different motors. For details, contact our company or your local distributor.

9-5 Environment for Operation, Storage and Transportation

<table>
<tr><td colspan="6">DO NOT expose the AC motor drive to bad environmental conditions, such as dust, direct sunlight, corrosive/ inflammable gasses, humidity, liquid or vibration. The salt in the air must be less than 0.01 mg/ cm^2 every year.</td></tr>
<tr><td rowspan="13">Environment</td><td>Installation location</td><td colspan="4">IEC60364-1/ IEC60664-1 Pollution degree 2, Indoor use only.</td></tr>
<tr><td rowspan="5">Surrounding Temperature</td><td rowspan="3">Operation</td><td rowspan="2">IP20 / UL Open Type</td><td>-20–50°C</td></tr>
<tr><td>-20–60°C (Derating required)</td></tr>
<tr><td>IP20 installed side by side</td><td>-20–40°C</td></tr>
<tr><td>NEMA 1 / UL Type 1</td><td>-20–55°C (Derating required)</td></tr>
<tr><td>Storage</td><td colspan="2">-40–85°C</td></tr>
<tr><td>Transportation</td><td colspan="2">-20–70°C</td></tr>
<tr><td colspan="3">Non-condensing, non-freezing</td></tr>
<tr><td rowspan="3">Rated Humidity</td><td>Operation</td><td colspan="2">Max. 90%</td></tr>
<tr><td>Storage / Transportation</td><td colspan="2">Max. 95%</td></tr>
<tr><td colspan="3">No condense water</td></tr>
<tr><td rowspan="2">Air Pressure</td><td>Operation</td><td colspan="2">86–106 kPa</td></tr>
<tr><td>Storage / Transportation</td><td colspan="2">70–106 kPa</td></tr>
<tr><td rowspan="4">Pollution Level</td><td>Operation</td><td colspan="2">Class 3C2; Class 3S2</td></tr>
<tr><td>Storage</td><td colspan="2">Class 2C2; Class 2S2</td></tr>
<tr><td>Transportation</td><td colspan="2">Class 1C2; Class 1S2</td></tr>
<tr><td colspan="3">Concentrate prohibited</td></tr>
<tr><td>Altitude</td><td colspan="3">Operable at altitude below 1000 m (derating if operated over 1000 m)</td></tr>
<tr><td rowspan="2">Package Drop</td><td>Storage</td><td colspan="3" rowspan="2">ISTA procedure 1A (according to weight) IEC 60068-2-31</td></tr>
<tr><td>Transportation</td></tr>
<tr><td rowspan="2">Vibration</td><td>Operating</td><td colspan="3">1.0 mm, peak to peak value range from 2–13.2 Hz; 0.7–1.0 G range from 13.2–55 Hz; 1.0 G range from 55–512 Hz; complies with IEC 60068-2-6.</td></tr>
<tr><td>Non-operating</td><td colspan="3">2.5 G peak
5 Hz–2 kHz
0.015" maximum displacement</td></tr>
<tr><td rowspan="2">Impact</td><td>Operating</td><td colspan="3">15 G, 11 ms; complies with IEC / EN 60068-2-27.</td></tr>
<tr><td>Non-operating</td><td colspan="3">30 G</td></tr>
</table>

Table 9-6

9-6 Derating for Ambient Temperature and Altitude

9-6-1 Derating Curve for Ambient Temperature and Altitude

Protection Level	Operating Environment
IP20 / UL Open Type	If the AC motor drive operates at the rated current, the ambient temperature needs to be between -20–50°C. If the temperature is above 50°C, decrease 2.5% of the rated current for every 1°C increase in temperature. The maximum allowable temperature is 60°C.
NEMA1 / UL Type 1	If the AC motor drive operates at the rated current, the ambient temperature needs to be between -20–40°C. If the temperature is above 40°C, decrease 2.5% of the rated current for every 1°C increase in temperature. The maximum allowable temperature is 60°C.
High Altitude	If the AC motor drive is installed at an altitude of 0–1000 m, follow normal operation restrictions. For altitudes of 1000–2000 m, decrease the drive's rated current by 1% or lower the temperature by 0.5°C for every 100 m increase in altitude. The maximum altitude for corner grounded is 2000 m. If installing at an altitude higher than 2000 m is required, contact Delta for more information.

Table 9-7

Ambient Temperature Derating Curve

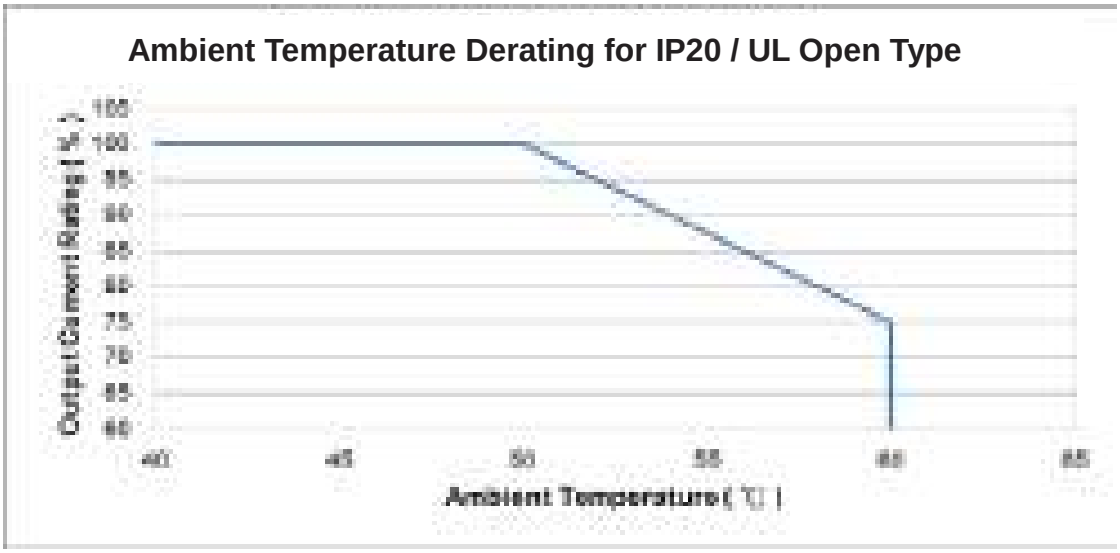

Figure 9-1

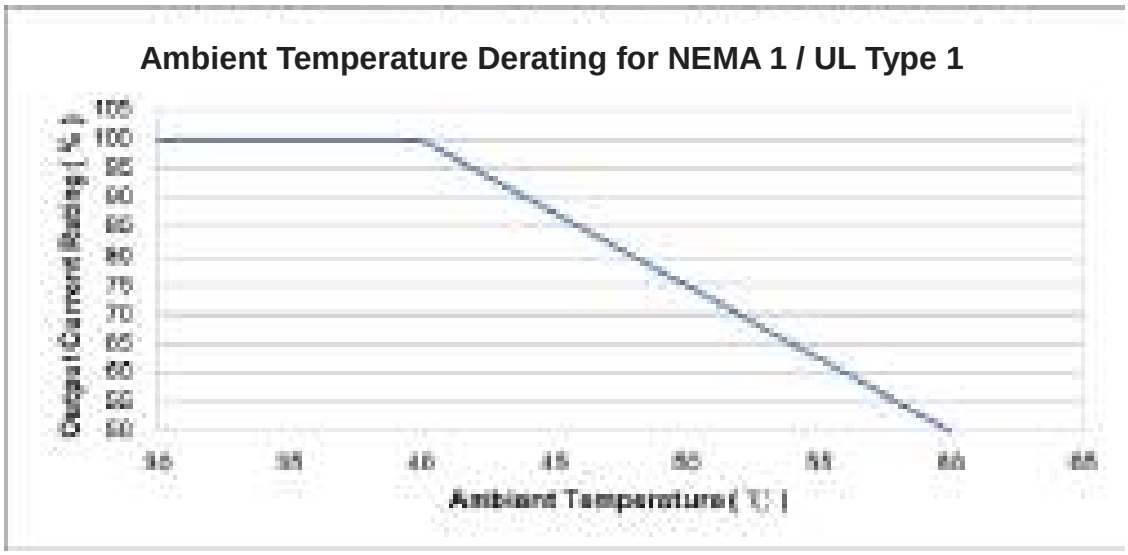

Figure 9-2

For IP20 / UL Open Type

Current derating at ambient temperature				
Ambient temperature		40°C	45°C	50°C
Operating altitude above sea level (m)	0–1000	100%		
	1001–1500	100%		95%
	1501–2000	100%	95%	90%

Table 9-8

For NEMA1 / UL Type 1

Current derating at ambient temperature				
Ambient temperature		30°C	35°C	40°C
Operating altitude above sea level (m)	0–1000	100%		
	1001–1500	100%		95%
	1501–2000	100%	95%	90%

Table 9-9

Altitude Derating Curve

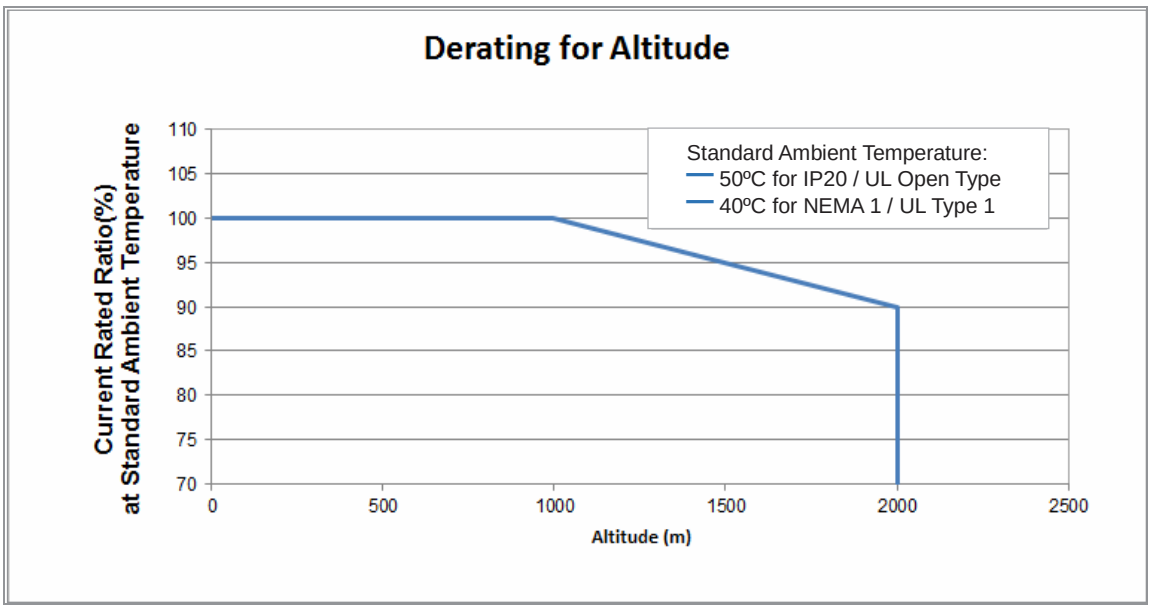

Figure 9-3

9-6-2 Derating Curve for Carrier Frequency

Normal load (Pr.00-16 = 0)

- Space Vector Modulation Mode
  (Pr.11-41 = 2)

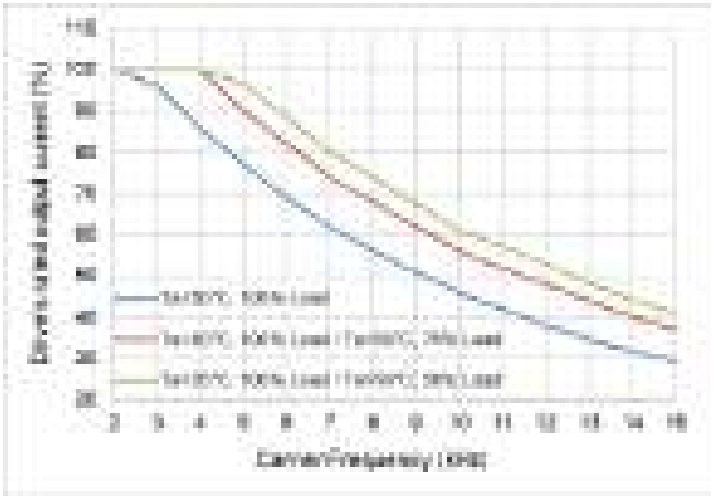

Figure 9-4

The rated output current (%) of SVPWM in normal load for different carrier frequencies:

Ambient Temp. (Ta) 100% Load \ Carrier Freq. (kHz)	2	3	4	5	6	7	8	9	10	11	12	13	14	15
50°C	100	96	86	77	69	62	56	51	46	42	38	35	32	29
40°C	100	100	100	90	82	74	68	62	56	52	48	44	40	37
35°C	100	100	100	96.5	88.5	80	74	67.5	61	57	53	48.5	44	41

Table 9-10

- Two-phase Modulation Mode
  (Pr.11-41 = 0)

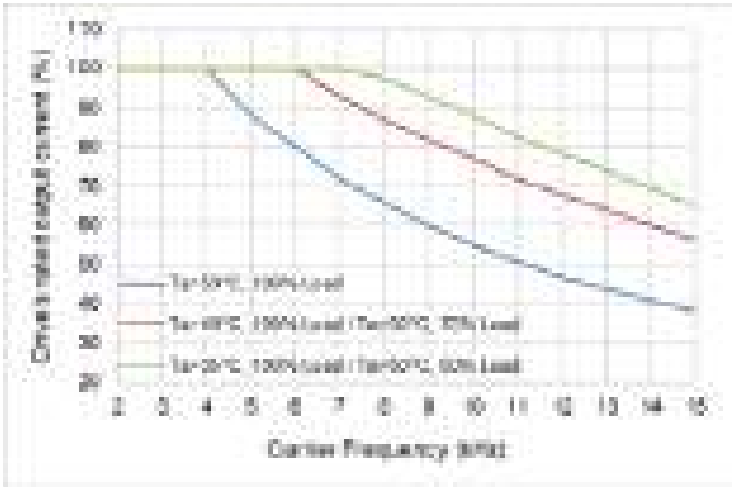

Figure 9-5

The rated output current (%) of DPWM in normal load for different carrier frequencies:

Ambient Temp. (Ta) 100% Load \ Carrier Freq. (kHz)	2	3	4	5	6	7	8	9	10	11	12	13	14	15
50°C	100	100	100	88	80	72	66	60	55	51	47	44	41	38
40°C	100	100	100	100	100	93	87	82	77	72	68	64	60	56
35°C	100	100	100	100	100	100	97.5	93	88	82.5	78.5	74	69.5	65

Table 9-11

Heavy load (Pr.00-16 = 1)

- Space Vector Modulation Mode
  (Pr.11-41 = 2)

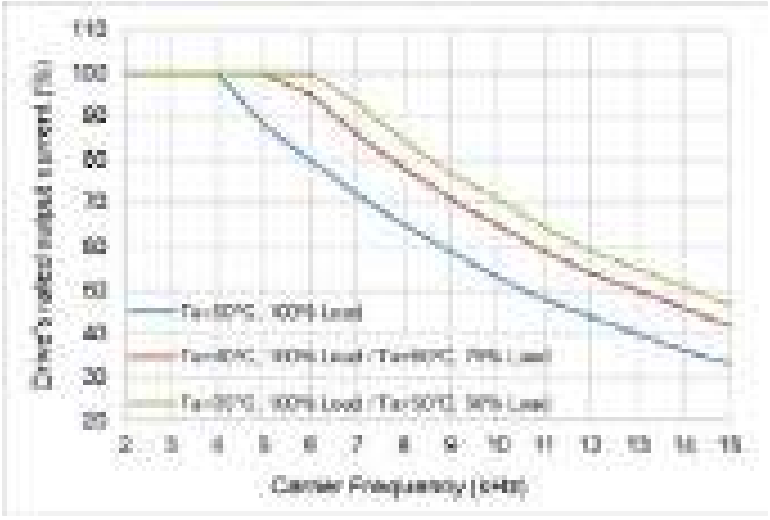

Figure 9-6

The rated output current (%) of SVPWM in heavy load for different carrier frequencies:

Carrier Freq. (kHz) / Ambient Temp. (Ta) 100% Load	2	3	4	5	6	7	8	9	10	11	12	13	14	15
50°C	100	100	100	88	80	72	65	59	53	48	44	40	36	33
40°C	100	100	100	100	95	86	78	71	65	59	54	50	46	42
35°C	100	100	100	100	100	93	84.5	77	71	64.5	59	55	51	46.5

Table 9-12

- Two-phase Modulation Mode
  (Pr.11-41 = 0)

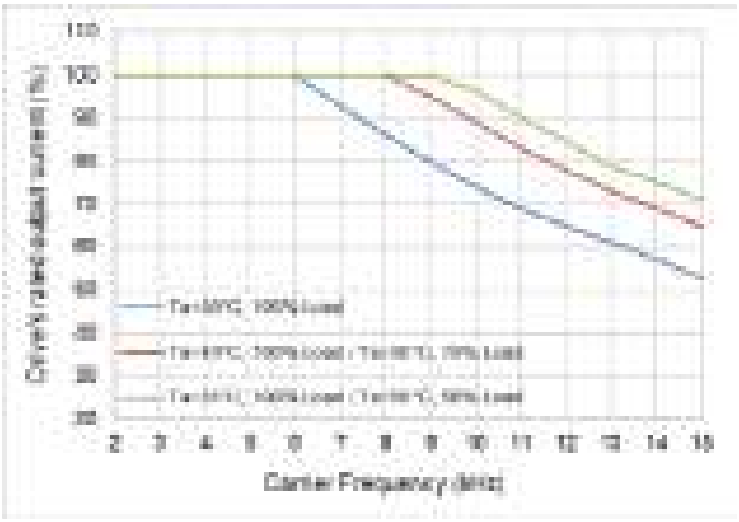

Figure 9-7

The rated output current (%) of DPWM in heavy load for different carrier frequencies:

Carrier Freq. (kHz) / Ambient Temp. (Ta) 100% Load	2	3	4	5	6	7	8	9	10	11	12	13	14	15
50°C	100	100	100	100	100	93	86	80	74	69	65	61	57	53
40°C	100	100	100	100	100	100	100	95	89	83	78	73	69	65
35°C	100	100	100	100	100	100	100	100	96.5	90	84.5	79	75	71

Table 9-13

[The page intentionally left blank]

Chapter 10 Digital Keypad

10-1 Keyboard panel

10-2 Descriptions of keypad functions

10-3 Keypad operation process

10-4 Reference Table for the 16-segment Digital Keypad LED Display

10-1 Keyboard panel

Main Display Area
Displays Frequency, Current, Voltage, User-defined Units, Errors and more

Stauts Display Area
Displays the operation status of the drive: Run, Stop, Forward, Reverse

Up Key
Changes the setting value and the parameters

Run Key
Starts the drive

Stop / Reset Key
Stops the drive and resets after error

Potentiometer
Adjusts the input frequency

Selection Key for Display Screen
Changes the Display Screen mode

Enter Key
1. Enters the setting page, such as Forward command (Frd), Application selection function (APP)
2. Confirms the setting of the parameter

Left Shift / Down Key
Changes the setting value and parameters (Switch between Left Shift and Down by long pressing the Mode Key)

10-2 Descriptions of keypad functions

Displayed items	Descriptions
RUN ● FWD ● REV ● F60.0 ● STOP ● PLC	Displays the present frequency setting for the drive.
RUN ● FWD ● REV ● H50.0 ● STOP ● PLC	Displays the actual frequency output to the motor.
RUN ● FWD ● REV ● U 18 ● STOP ● PLC	Displays the user-defined output of a physical quantity. This example is for parameter Pr.00-04 = 30.
RUN ● FWD ● REV ● A 5.0 ● STOP ● PLC	Displays the load current.
RUN ● FWD ● REV ● Frd ● STOP ● PLC	Forward command
RUN ● FWD ● REV ● rEv ● STOP ● PLC	Reverse command
RUN ● FWD ● REV ● c 20 ● STOP ● PLC	Displays the count value.
RUN ● FWD ● REV ● 06.00 ● STOP ● PLC	Displays a parameter item.
RUN ● FWD ● REV ● 10 ● STOP ● PLC	Displays the content of a parameter value.
RUN ● FWD ● REV ● EF ● STOP ● PLC	Displays an external fault.
RUN ● FWD ● REV ● End ● STOP ● PLC	Displays the data that has been accepted and automatically stored in the internal memory.
RUN ● FWD ● REV ● Err ● STOP ● PLC	Displays the data set that is not accepted or has exceeded the value.

10-3 Keypad operation process

1. Main Page Selection

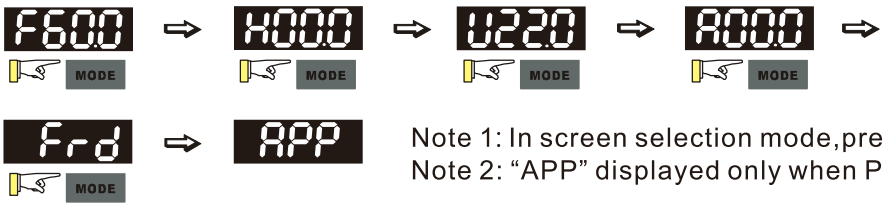

Setting parameters

Note: In the parameter setting mode, you can press MODE to return to the selection mode.

To shift data

Setting direction (When the operation source is the digital keypad.)

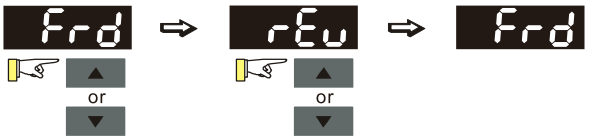

2. F Page (Frequency command setting page)

General Mode 1

(maximum operation frequency Pr.01-00 is 2 digits; for example Pr.01-00 = 60.00 Hz)

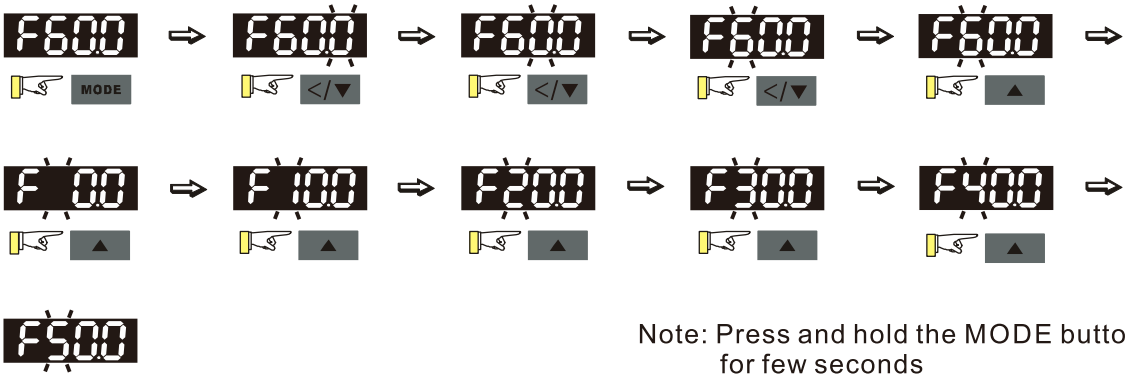

General Mode 2

(maximum operation frequency Pr.01-00 is 3 digits; for example Pr.01-00 = 599.0 Hz)

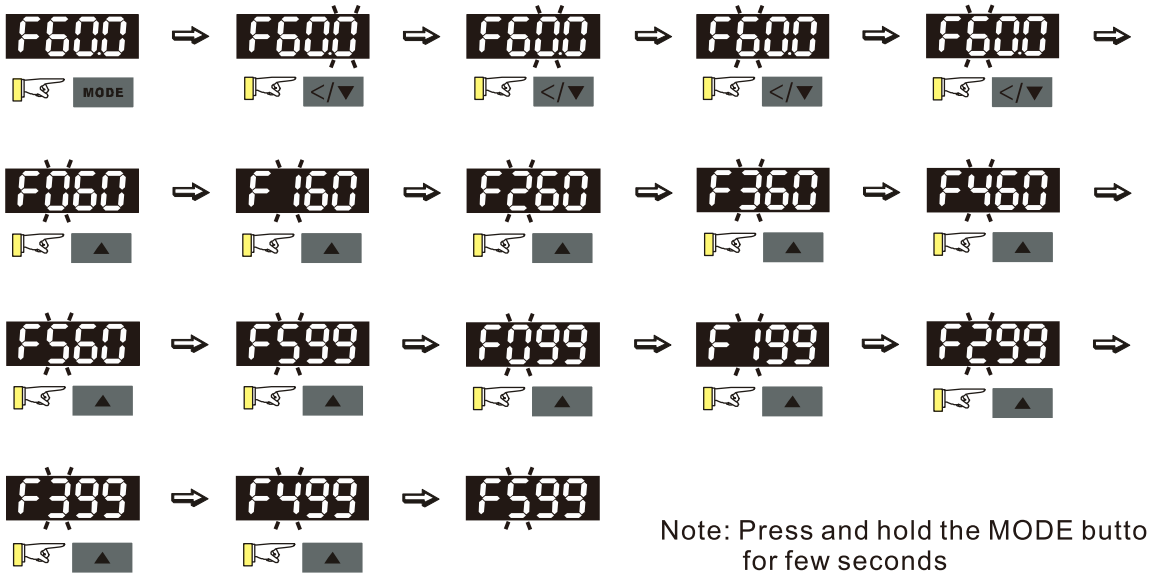

Note: Press and hold the MODE button for few seconds

3. Application Selection Page

The Application Selection page displays “APP”, but does not show the APP page when Pr.13-00 = 0.

The description of Pr.13-00 setting is as follows:

Pr.13-00 = 0 specifies the application selection is inactive and does not show on the display.

Pr.13-00 = 1 specifies a user-defined application, and the keypad displays “USER”.

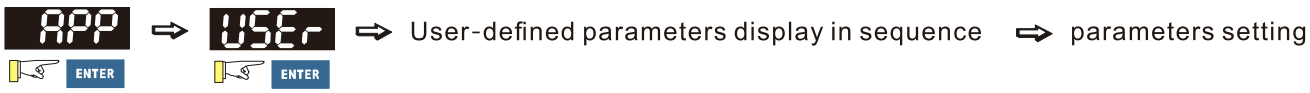

Pr.13-00 = 3 specifies the Fan application, and the keypad displays “FAN”.

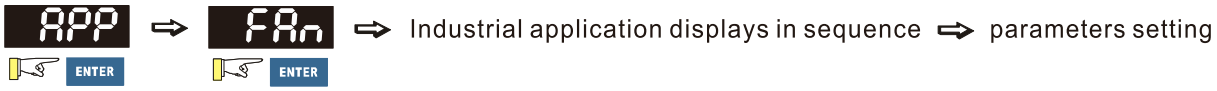

Pr.13-00 = 4 specifies the Pump application, and the keypad displays “PUMP”.

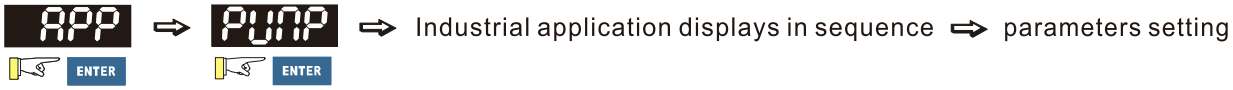

Pr.13-00 = 5 specifies the Conveyor application, and the keypad displays “CnYr”.

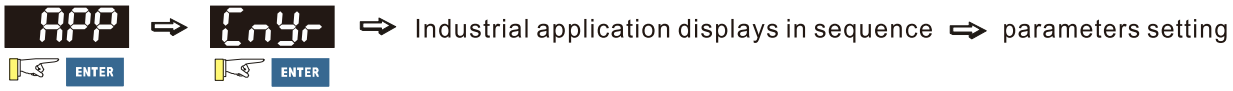

Pr.13-00 = 7 specifies the Packing application, and the keypad displays “PACK”.

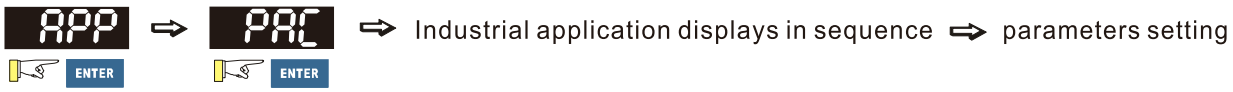

When Pr.13-00 is not 0, the corresponding parameters appear in the APP page according to the setting for Pr.13-00. In each selected application, you can view the parameters by pressing the digital dial button. If Pr.13-00 = 1 and you do not set any parameters in Pr.13-01–Pr.13-50, you cannot enter the sub-layer of the USER page. The parameter settings in the APP page are the same as those in other parameter groups: rotate and then press the digital dial to select and set the parameter's value.

Follow the process below to set the user-defined application selection (Pr.13-00 = 1).

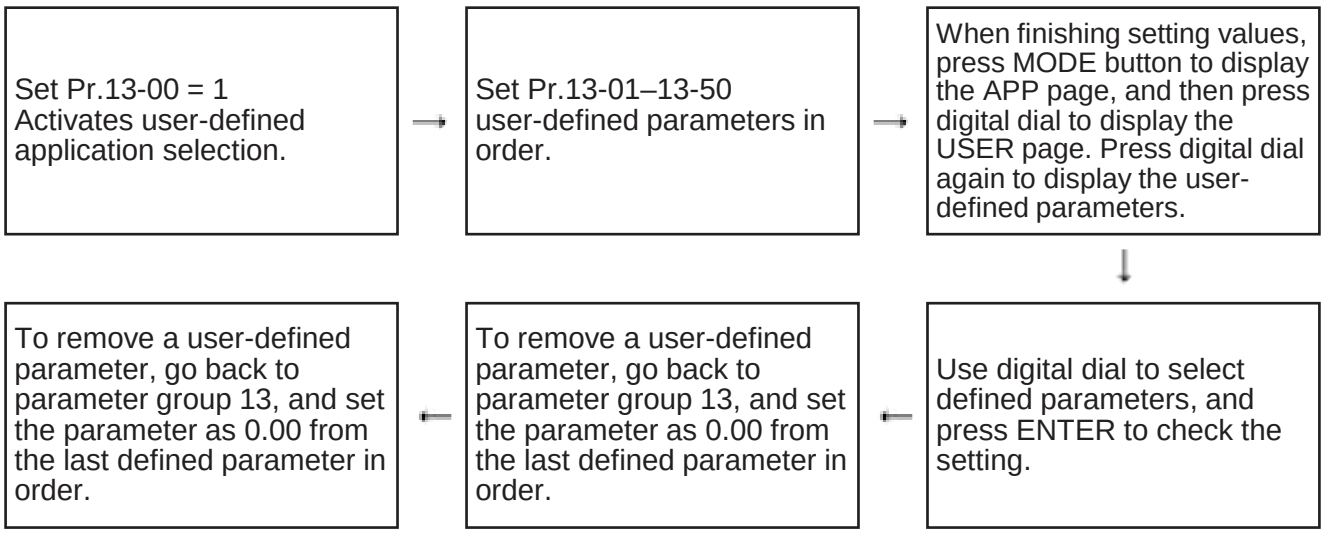

(1) Activate the application selection by setting Pr.13-00.

(2) After setting Pr.13-00 = 1, you can enter the definitions for Pr.13-01–13-50.

(3) The default setting for Pr.13-01–13-50 is P 0.00. Press the digital dial to set the corresponding parameters for Pr.13-01–13-50 in sequence.

(4) Setting the corresponding parameters for Pr.13-01–13-50 is the same as those in other parameter groups: rotate and press the digital dial to select and set the parameter's value.
Note 1: you cannot set values for read-only parameters.
Note 2: you must set Pr.13-01, 02…50 in sequence, or the display shows "Err".

(5) To change the corresponding parameters, go back to Pr.13-01–13-50 to modify.

(6) After setting, to remove a set parameter, set from the last parameter (set to 0.00) first, or the display shows "Err".
For example, if there are 5 user-defined parameters (Pr.13-01, 13-02…13-05), to remove Pr.13-02, you must remove Pr.13-05 first, then 13-04, then 13-03, and then 13-02.

(7) When you finish setting, press MODE to go back to the APP page, and then press the digital dial again. The keypad displays "USER". After you press the digital dial again, the corresponding parameter that you set appears.

Follow the process below to set specific application selection (Pr.13-00 = 2, 3, 4, 5, or 7).

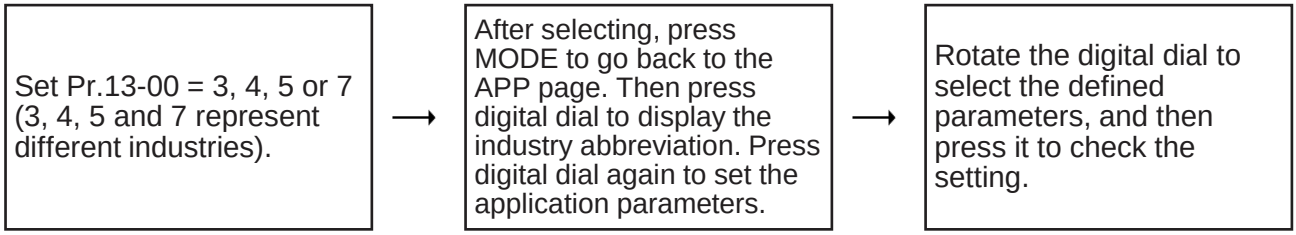

4. Parameter setting

(1) Unsigned parameter

(Parameter setting range ≥ 0; for example: Pr.01-00)

A. Disable the left shift key: rotate the digital dial to select and adjust the parameters.

B. Enable the left shift key: Press and hole the MODE key for 2 sec. until the last digit starts to blink. Press the left shift key to move the blinking cursor to the digit to adjust, and increase the value by rotating the digital dial clockwise. The value goes back to 0 after 9. Decrease the value by rotating the digital dial counter-clockwise. The value goes to 9 after 0.

C. Press the DOWN key to move the blinking cursor one digit to the left, increase the value of this digit by pressing the UP key; and the cursor moves to the next digit on the left when pressing the DOWN key again.

D. When you complete the setting, the left shift key is still enabled. Press and hold the MODE key for 2 sec. to disable the left shift key.

For example: the default setting for Pr.01-00 is 60.0. Press and hold the MODE key to enable the left shift key, the left shifting process is as shown in the following:

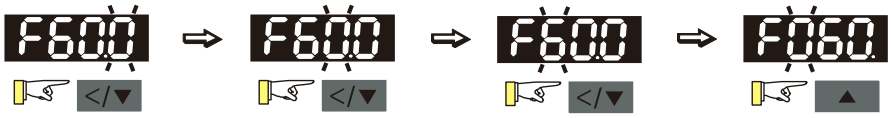

The upper limit for Pr.01-00 is 599.0. If you set a value larger than 599.0, “Err” appears after you press the digital dial, and then the keypad shows the upper limit (599.0) for a second to remind you of the incorrect setting. The setting value remains as the original set value and the cursor returns to the last digit.

(2) Signed parameter setting status 1

(Parameter setting range has one or none decimal places, the range can be smaller than 0; for example: Pr.03-03)

A. Disable the left shift key: rotate the digital dial to select and adjust the parameters.

B. Enable the left shift key: Press and hole the MODE key for 2 sec. until the last digit starts to blink. Press the left shift key to move the blinking cursor to the digit to adjust, and increase the value by rotating the digital dial clockwise. The value goes back to 0 after 9. Decrease the value by rotating the digital dial counter-clockwise, and the value goes to 9 after 0.

C. Press the left shift key to shift the blinking cursor one digit to the left. When you shift to the first digit and press the digital dial, the digit “0” changes to “-” (minus).

D. When you complete the setting, the left shift key is still enabled. Press and hold the MODE key for 2 sec. to disable the left shift key.

E. As for parameters’ settings of 3-digit and one decimal place (Pr.03-03, -100–100%), it only displays 3 digits on the keypad.

For example: the default setting for Pr.03-03 is 0.0. Press and hold the MODE key for 2 sec. to enable the left shift key, and the left shifting process is as shown in the following:

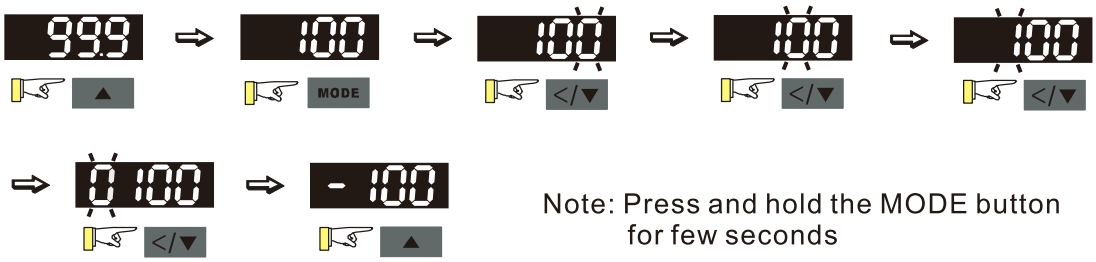

Note: Press and hold the MODE button for few seconds

The upper limit for Pr.03-03 is 100.0 and lower limit is -100.0. If the value is more than 100.0 or less than -100.0, “Err” appears after you press the digital dial, and then the keypad shows the upper limit (100.0) or lower limit (-100.0) for a second to remind you of the incorrect setting. The setting value remains as the original set value, and the cursor returns to the last digit.

10-4 Reference Table for the 16-segment Digital Keypad LED Display

Number	0	1	2	3	4	5	6	7	8	9
Eleven-Segment Display	0	1	2	3	4	5	6	7	8	9
Number	A	a	B	b	C	c	D	d	E	e
Eleven-Segment Display	A	-	-	b	C	c	-	d	E	-
Number	F	f	G	g	H	h	I	i	J	j
Eleven-Segment Display	F	-	G	-	H	h	-	i	J	j
Number	K	k	L	l	M	m	N	n	O	o
Eleven-Segment Display	K	-	L	-	-	-	-	n	-	o
Number	P	p	Q	q	R	r	S	s	T	t
Eleven-Segment Display	P	-	-	q	-	r	S	-	-	t
Number	U	u	V	v	W	w	X	x	Y	y
Eleven-Segment Display	U	u	-	v	-	-	-	-	y	-
Number	Z	z								
Eleven-Segment Display	=	-								

[This page intentionally left blank]

Chapter 11 Summary of Parameter Settings

00 Drive Parameters

01 Basic Parameters

02 Digital Input / Output Parameters

03 Analog Input / Output Parameters

04 Multi-Stage Speed Parameters

05 Motor Parameters

06 Protection Parameters (1)

07 Special Parameters

08 High-function PID Parameters

09 Communication Parameters

10 Speed Feedback Control Parameters

11 Advanced Parameters

12 Function Parameters

13 Macro / User-Defined Macro

14 Protection Parameters (2)

This chapter provides a summary of parameter (Pr.) setting ranges and defaults. You can set, change, and reset parameters through the digital keypad.

NOTE

↗: You can set this parameter during operation

The following are abbreviations for different types of motors:

- IM: Induction motor
- PM: Permanent magnet synchronous AC motor
- IPM: Interior permanent magnet synchronous AC motor
- SPM: Surface permanent magnet synchronous AC motor

00 Drive Parameters

Pr.	Explanation	Settings	Default
00-00	AC motor drive identity code	101: 115 V, 1 Phase, 0.125 HP 102: 115 V, 1 Phase, 0.25 HP 103: 115 V, 1 Phase, 0.5 HP 104: 115 V, 1 Phase, 1 HP 301: 230 V, 1 Phase, 0.125 HP 302: 230 V, 1 Phase, 0.25 HP 303: 230 V, 1 Phase, 0.5 HP 304: 230 V, 1 Phase, 1 HP 305: 230 V, 1 Phase, 2 HP 306: 230 V, 1 Phase, 3 HP 201: 230 V, 3 Phase, 0.125 HP 202: 230 V, 3 Phase, 0.25 HP 203: 230 V, 3 Phase, 0.5 HP 204: 230 V, 3 Phase, 1 HP 205: 230 V, 3 Phase, 2 HP 206: 230 V, 3 Phase, 3 HP 207: 230 V, 3 Phase, 5 HP 208: 230 V, 3 Phase, 7.5 HP 209: 230 V, 3 Phase, 10 HP 210: 230 V, 3 Phase, 15 HP 211: 230 V, 3 Phase, 20 HP 403: 460 V, 3 Phase, 0.5 HP 404: 460 V, 3 Phase, 1 HP 405: 460 V, 3 Phase, 2 HP 406: 460 V, 3 Phase, 3 HP 407: 460 V, 3 Phase, 5 HP 408: 460 V, 3 Phase, 7.5 HP 409: 460 V, 3 Phase, 10 HP 410: 460 V, 3 Phase, 15 HP	Read only

	Pr.	Explanation	Settings	Default
			411: 460 V, 3 Phase, 20 HP 412: 460 V, 3 Phase, 25 HP 413: 460 V, 3 Phase, 30 HP 482: 460 V, 3 Phase, 4 HP	
	00-01	AC motor drive rated current display	Display by model	Read only
	00-02	Parameter reset	0: No function 1: Write protection for parameters 5: Reset kWh displays to 0 8: Keypad does not respond 9: Reset all parameters to defaults (base frequency is 50 Hz) 10: Reset all parameters to defaults (base frequency is 60 Hz) 11: Reset all parameters to defaults with base frequency at 50 Hz (keep the user-defined parameter values Pr.13-01–Pr.13-50) 12: Reset all parameters to defaults with base frequency at 60 Hz (keep the user-defined parameter values Pr.13-01–Pr.13-50)	0
✓	00-03	Select start-up display	0: F (frequency command) 1: H (output frequency) 2: U (user-defined, refer to Pr.00-04) 3: A (output current)	0
✓	00-04	Content of multi-function display (user-defined)	0: Display output current (A) (unit: Amp) 1: Display counter value (c) (unit: CNT) 2: Display the drive's actual output frequency (H.) (unit: Hz) 3: Display the drive's DC bus voltage (V) (unit: V_{DC}) 4: Display the drive's output voltage (E) (unit: V_{AC}) 5: Display the drive's output power angle (n) (unit: deg) 6: Display the drive's output power (P) (unit: kW) 7: Display the motor speed (rpm) (unit: rpm) 10: Display PID feedback (b) (unit: %) 11: Display AVI analog input terminal signal (1.) (unit: %) 12: Display ACI analog input terminal signal (2.) (unit: %) 14: Display the drive's IGBT temperature (i.) (unit: °C) 16: The digital input status (ON / OFF) (i) 17: The digital output status (ON / OFF) (o) 18: Display multi-step speed (S)	3

	Pr.	Explanation	Settings	Default
			19: The corresponding CPU digital input pin status (d) 20: The corresponding CPU digital output pin status (0.) 25: Overload count (0.00–100.00%) (o.) (unit: %) 26: Ground fault GFF (G.) (unit: %) 27: DC bus voltage ripple (r.) (unit: V_{DC}) 30: Display the output of User-defined (U) 31: Display Pr.00-05 user gain (K) 35: Control mode display: 0 = Speed control mode (SPD) 36: Present operating carrier frequency of the drive (J.) (Unit: Hz) 38: Display the drive status (6.) 41: kWh display (J) (unit: kWh) 42: PID target value (h.) (unit: %) 43: PID compensation (o.) (unit: %) 44: PID output frequency (b.) (unit: Hz) 47: Master frequency value (A) (unit: Hz) 60: Display PID setting and feedback signal 61: Display the content of the running program (1=tt)	
✓	00-05	Coefficient gain in actual output frequency	0.00–160.00	1.00
	00-06	Firmware version	Read only	Read only
✓	00-07	Parameter protection password input	0–65535 0–4: the number of password attempts allowed	0
✓	00-08	Parameter protection password setting	0–65535 0: No password protection or password entered incorrectly (Pr.00-07) 1: Password has been set	0
	00-10	Control mode	0: Speed mode	0
	00-11	Speed Control mode	0: IM VF (IM V/F control) 2: IM / PM SVC (IM / PM space vector control)	0
	00-16	Load selection	0: Normal load 1: Heavy load	1
	00-17	Carrier frequency	Normal load: 2–15 kHz	4
			Heavy load: 2–15 kHz	4
✓	00-20	Master frequency command source (AUTO, REMOTE)	0: Digital keypad 1: RS-485 communication input 2: External analog input (refer to Pr.03-00) 3: External UP / DOWN terminal (multi-function input terminals)	0

	Pr.	Explanation	Settings	Default
			4: Pulse input without direction command (refer to Pr.10-16 without considering direction) 7: Digital keypad potentiometer knob 9: PID controller (With Pr.08-65 = 1) Note: HOA (Hand-Off-Auto) function is valid only when you use with MO function setting 42 and 56 or with KPC-CC01 (optional).	
✓	00-21	Operation command source (AUTO, REMOTE)	0: Digital keypad 1: External terminals 2: RS-485 communication input Note: HOA (Hand-Off-Auto) function is valid only when you use with MO function setting 42 and 56 or with KPC-CC01 (optional).	0
✓	00-22	Stop method	0: Ramp to stop 1: Coast to stop 2: Motor stops by simple positioning	0
✓	00-23	Motor direction control	0: Enable forward / reverse 1: Disable reverse 2: Disable forward	0
	00-24	Digital operator (keypad) frequency command memory	Read only	Read only
✓	00-25	User-defined characteristics	bit 0–3: user-defined decimal places 0000b–0000b: no decimal place 0001b–0001b: one decimal place 0010b–0010b: two decimal places 0011b–0011b: three decimal places bit 4–15: user-defined unit 000xh: Hz 001xh: rpm 002xh: % 003xh: kg 004xh: m/s 005xh: kW 006xh: HP 007xh: ppm 008xh: 1/m 009xh: kg/s 00Axh: kg/m 00Bxh: kg/h 00Cxh: lb/s 00Dxh: lb/m	0

Pr.	Explanation	Settings	Default
		00Exh: lb/h 00Fxh: ft/s 010xh: ft/m 011xh: m 012xh: ft 013xh: degC 014xh: degF 015xh: mbar 016xh: bar 017xh: Pa 018xh: kPa 019xh: mWG 01Axh: inWG 01Bxh: ftWG 01Cxh: psi 01Dxh: atm 01Exh: L/s 01Fxh: L/m 020xh: L/h 021xh: m3/s 022xh: m3/h 023xh: GPM 024xh: CFM xxxxh: Hz	
00-26	Maximum user-defined value	0: Disable 0–65535 (when Pr.00-25 is set to no decimal place) 0.0–6553.5 (when Pr.00-25 set to 1 decimal place) 0.00–655.35 (when Pr.00-25 set to 2 decimal places) 0.000–65.535 (when Pr.00-25 set to 3 decimal places)	0
00-27	User-defined value	Read only	Read only
00-29	LOCAL / REMOTE mode	0: Standard HOA function 1: When switching between local and remote, the drive stops. 2: When switching between local and remote, the drive runs with REMOTE settings for frequency and operation status. 3: When switching between local and remote, the drive runs with LOCAL settings for frequency and operation status. 4: When switching between local and remote, the drive runs with LOCAL settings when switched to Local and runs with REMOTE settings when switched to Remote for frequency and operating status.	0

	Pr.	Explanation	Settings	Default
✓	00-30	Master frequency command source (HAND, LOCAL)	0: Digital keypad 1: RS-485 communication input 2: External analog input (refer to Pr.03-00) 3: External UP / DOWN terminal (multi-function input terminals) 7: Digital keypad potentiometer knob 9: PID controller Note: HOA (Hand-Off-Auto) function is valid only when you use with MO function setting 41 and 56 or with KPC-CC01 (optional).	0
✓	00-31	Operation command source (HAND, LOCAL)	0: Digital keypad 1: External terminal 2: RS-485 communication input Note: HOA (Hand-Off-Auto) function is valid only when you use with MO function setting 41 and 56 or with KPC-CC01 (optional).	0
✓	00-32	Digital keypad STOP function	0: STOP key disabled 1: STOP key enabled	0
✓	00-33	RPWM Mode Selection	0: Disabled 1: RPWM mode 1 2: RPWM mode 2 3: RPWM mode 3	0
✓	00-34	RPWM Range	0.0–4.0 kHz Pr.00-17 = 4 kHz, 8 kHz: the setting range is 0.0–2.0 kHz Pr.00-17 = 5–7 kHz: the setting range is 0.0–4.0 kHz	0.0
	00-35	Auxiliary frequency source	0: Master and auxiliary frequency function disabled 1: Digital keypad 2: RS-485 communication input 3: Analog input 4: External UP / DOWN key input (multi-function input terminals) 7: Digital keypad potentiometer knob	0
	00-36	Master and auxiliary frequency command selection	0: Master + auxiliary frequency 1: Master – auxiliary frequency 2: Auxiliary – master frequency	0
✓	00-48	Display filter time (current)	0.001–65.535 sec.	0.100
✓	00-49	Display filter time (keypad)	0.001–65.535 sec.	0.100
	00-50	Software version (date)	Read only	Read only

01 Basic Parameters

	Pr.	Explanation	Settings	Default
	01-00	Motor 1 Maximum operation frequency	0.00–599.00 Hz	60.00/ 50.00
	01-01	Output rated / base frequency of motor 1	0.00–599.00 Hz	60.00/ 50.00
	01-02	Output rated / base voltage of motor 1	115V / 230V models: 0.0–255.0 V 460V models: 0.0–510.0 V	220.0 440.0
	01-03	Mid-point frequency 1 of motor 1	0.00–599.00 Hz	3.00
✓	01-04	Mid-point voltage 1 of motor 1	115V / 230V models: 0.0–240.0 V 460V models: 0.0–480.0 V	11.0 22.0
	01-05	Mid-point frequency 2 of motor 1	0.00–599.00 Hz	1.5
✓	01-06	Mid-point voltage 2 of motor 1	115V / 230V models: 0.0–240.0 V 460V models: 0.0–480.0 V	5.0 10.0
	01-07	Minimum output frequency of motor 1	0.00–599.00 Hz	0.50
✓	01-08	Minimum output voltage of motor 1	115V / 230V models: 0.0–240.0 V 460V models: 0.0–480.0 V	1.0 2.0
	01-09	Start-up frequency	0.00–599.00 Hz	0.50
✓	01-10	Output frequency upper limit	0.00–599.00 Hz	599.00
✓	01-11	Output frequency lower limit	0.00–599.00 Hz	0.00
✓	01-12	Acceleration time 1	Pr.01-45 = 0: 0.00–600.00 sec. Pr.01-45 = 1: 0.0–6000.0 sec.	10.00 10.0
✓	01-13	Deceleration time 1	Pr.01-45 = 0: 0.00–600.00 sec. Pr.01-45 = 1: 0.0–6000.0 sec.	10.00 10.0
✓	01-14	Acceleration time 2	Pr.01-45 = 0: 0.00–600.00 sec. Pr.01-45 = 1: 0.0–6000.0 sec.	10.00 10.0
✓	01-15	Deceleration time 2	Pr.01-45 = 0: 0.00–600.00 sec. Pr.01-45 = 1: 0.0–6000.0 sec.	10.00 10.0
✓	01-16	Acceleration time 3	Pr.01-45 = 0: 0.00–600.00 sec. Pr.01-45 = 1: 0.0–6000.0 sec.	10.00 10.0
✓	01-17	Deceleration time 3	Pr.01-45 = 0: 0.00–600.00 sec. Pr.01-45 = 1: 0.0–6000.0 sec.	10.00 10.0
✓	01-18	Acceleration time 4	Pr.01-45 = 0: 0.00–600.00 sec. Pr.01-45 = 1: 0.0–6000.0 sec.	10.00 10.0

	Pr.	Explanation	Settings	Default
✓	01-19	Deceleration time 4	Pr.01-45 = 0: 0.00–600.00 sec. Pr.01-45 = 1: 0.0–6000.0 sec.	10.00 10.0
✓	01-20	JOG acceleration time	Pr.01-45 = 0: 0.00–600.00 sec. Pr.01-45 = 1: 0.0–6000.0 sec.	10.00 10.0
✓	01-21	JOG deceleration time	Pr.01-45 = 0: 0.00–600.00 sec. Pr.01-45 = 1: 0.0–6000.0 sec.	10.00 10.0
✓	01-22	JOG frequency	0.00–599.00 Hz	6.00
✓	01-23	Switch frequency between first and fourth acceleration / deceleration	0.00–599.00 Hz	0.00
✓	01-24	S-curve for acceleration begin time 1	Pr.01-45 = 0: 0.00–25.00 sec. Pr.01-45 = 1: 0.0–250.0 sec.	0.20 0.2
✓	01-25	S-curve for acceleration arrival time 2	Pr.01-45 = 0: 0.00–25.00 sec. Pr.01-45 = 1: 0.0–250.0 sec.	0.20 0.2
✓	01-26	S-curve for deceleration begin time 1	Pr.01-45 = 0: 0.00–25.00 sec. Pr.01-45 = 1: 0.0–250.0 sec.	0.20 0.2
✓	01-27	S-curve for deceleration arrival time 2	Pr.01-45 = 0: 0.00–25.00 sec. Pr.01-45 = 1: 0.0–250.0 sec.	0.20 0.2
	01-28	Skip frequency 1 (upper limit)	0.00–599.00 Hz	0.00
	01-29	Skip frequency 1 (lower limit)	0.00–599.00 Hz	0.00
	01-30	Skip frequency 2 (upper limit)	0.00–599.00 Hz	0.00
	01-31	Skip frequency 2 (lower limit)	0.00–599.00 Hz	0.00
	01-32	Skip frequency 3 (upper limit)	0.00–599.00 Hz	0.00
	01-33	Skip frequency 3 (lower limit)	0.00–599.00 Hz	0.00
	01-34	Zero-speed mode	0: Output waiting 1: Zero-speed operation 2: Fmin (refer to Pr.01-07 and Pr.01-41)	0
	01-35	Output rated / base frequency of motor 2	0.00–599.00 Hz	60.00/ 50.00
	01-36	Output rated / base voltage of motor 2	115 / 230V models: 0.0–255.0 V 460V models: 0.0–510.0 V	220.0 440.0
	01-37	Mid-point frequency 1 of motor 2	0.00–599.00 Hz	3.00

	Pr.	Explanation	Settings	Default
✓	01-38	Mid-point voltage 1 of motor 2	115 / 230V models: 0.0–240.0 V 460V models: 0.0–480.0 V	11.0 22.0
	01-39	Mid-point frequency 2 of motor 2	0.00–599.00 Hz	0.50
✓	01-40	Mid-point voltage 2 of motor 2	115 / 230V models: 0.0–240.0 V 460V models: 0.0–480.0 V	2.0 4.0
	01-41	Minimum output frequency of motor 2	0.00–599.00 Hz	0.00
✓	01-42	Minimum output voltage of motor 2	115 / 230V models: 0.0–240.0 V 460V models: 0.0–480.0 V	0.0 0.0
	01-43	V/F curve selection	0: V/F curve determined by Pr.01-00–01-08 1: V/F curve to the power of 1.5 2: V/F curve to the power of 2	0
✓	01-44	Auto-acceleration and auto-deceleration setting	0: Linear acceleration and deceleration 1: Auto-acceleration and linear deceleration 2: Linear acceleration and auto-deceleration 3: Auto-acceleration and auto-deceleration 4: Stall prevention by auto-acceleration and auto-deceleration (limited by Pr.01-12–01-21)	0
	01-45	Time unit for acceleration / deceleration and S-curve	0: Unit 0.01 sec. 1: Unit 0.1 sec.	0
	01-49	Deceleration method selection	0: Normal deceleration 1: Over-voltage energy restriction 2: Traction energy control (TEC)	0
	01-52	Maximum operation frequency of motor 2	0.00–599.00 Hz	60.00/ 50.00

02 Digital Input / Output Parameters

Pr.	Explanation	Settings	Default
02-00	Two-wire / Three-wire operation control	0: No function 1: Two-wire mode 1, power on for operation control (M1: FWD / STOP, M2: REV / STOP) 2: Two-wire mode 2, power on for operation control (M1: RUN / STOP, M2: FWD / REV) 3: Three-wire, power on for operation control (M1: RUN, M2: REV / FWD, M3: STOP) 4: Two-wire mode 1, Quick Start (M1: FWD / STOP, M2: REV / STOP) 5: Two-wire mode 2, Quick Start (M1: RUN / STOP, M2: FWD / REV) 6: Three-wire, Quick Start (M1: RUN, M2: REV / FWD, M3: STOP) **IMPORTANT** 1. In the fast start-up function, terminal output keeps in the ready status, and the drive responds to the command immediately. 2. When using Quick Start function, the output terminals UVW are with driving voltages in order to output and respond immediately if a Start command is given. Do not touch the terminals or modify the motor wiring to prevent electric shocks.	1
02-01	Multi-function input command 1 (MI1)	0: No function 1: Multi-step speed command 1 / multi-step position command 1 2: Multi-step speed command 2 / multi-step position command 2 3: Multi-step speed command 3 / multi-step position command 3 4: Multi-step speed command 4 / multi-step position command 4 5: Reset 6: JOG operation [by external control or KPC-CC01 (optional)] 7: Acceleration / deceleration speed inhibit 8: 1st and 2nd acceleration / deceleration time selection 9: 3rd and 4th acceleration / deceleration time selection 10: External Fault (EF) Input (Pr.07-20) 11: Base Block (B.B.) input from external	0
02-02	Multi-function input command 2 (MI2)		0
02-03	Multi-function input command 3 (MI3)		1
02-04	Multi-function input command 4 (MI4)		2
02-05	Multi-function input command 5 (MI5)		3

Pr.	Explanation	Settings	Default
		12: Output stop 13: Cancel the setting for auto-acceleration / auto-deceleration time 15: Rotating speed command from AVI 18: Force to stop (Pr.07-20) 19: Digital up command 20: Digital down command 21: PID function disabled 22: Clear the counter 23: Input the counter value 24: FWD JOG command 25: REV JOG command 28: Emergency stop (EF1) 29: Signal confirmation for Y-connection 30: Signal confirmation for Δ-connection 38: Disable writing EEPROM function 40: Force coasting to stop 41: HAND switch 42: AUTO switch 49: Enable Drive 50: Slave dEb action to execute 56: Local / Remote selection 58: Enable fire mode (with RUN command) 59: Enable fire mode (without RUN command) 69: Auto-activate preheating command 70: Force auxiliary frequency return to 0 71: Disable PID function, force PID output return to 0 72: Disable PID function, retain the output value before disabled 73: Force PID integral gain return to 0, disable integral 74: Reverse PID feedback 77: PLC Program Running 78: PLC Program Step Completed 79: PLC Program Completed 80: PLC Operation Paused 83: Multi-motor (IM) selection bit 0 94: Programmable AUTO RUN 95: Pausing AUTO RUN 97: Multi-pump switch by HAND / AUTO mode 98: Simple positioning stop by forward limit	

	Pr.	Explanation	Settings	Default
			99: Simple positioning stop by reverse limit	
↗	02-09	External terminal UP / DOWN key mode	0: By the acceleration / deceleration time 1: Constant speed (Pr.02-10) 2: Pulse signal (Pr.02-10) 3: Curve 4: Step (Pr.02-10)	0
↗	02-10	External terminal Constant speed, acceleration / deceleration speed of the UP/DOWN key	0.001–1.000 Hz/ms	0.001
↗	02-11	Multi-function input response time	0.000–30.000 sec.	0.005
↗	02-12	Multi-function input mode selection	0000h–FFFFh (0: N.O.; 1: N.C.)	0000
↗	02-13	Multi-function output 1 (RY1)	0: No function 1: Indication during RUN 2: Operation speed reached 3: Desired frequency reached 1 (Pr.02-22) 4: Desired frequency reached 2 (Pr.02-24) 5: Zero speed (Frequency command) 6: Zero speed including STOP (Frequency command) 7: Over-torque 1 (Pr.06-06–06-08) 8: Over-torque 2 (Pr.06-09–06-11) 9: Drive is ready 10: Low voltage warning (Lv) (Pr.06-00) 11: Malfunction indication 13: Overheat warning (Pr.06-15) 14: Software brake signal indication (Pr.07-00) 15: PID feedback error (Pr.08-13, Pr.08-14) 16: Slip error (oSL) 17: Count value reached, does not return to 0 (Pr.02-20) 18: Count value reached, returns to 0 (Pr.02-19) 19: External interrupt B.B. input (Base Block) 20: Warning output 21: Over-voltage 22: Over-current stall prevention 23: Over-voltage stall prevention 24: Operation source 25: Forward command	11
↗	02-16	Multi-function output 2 (MO1)		0

	Pr.	Explanation	Settings	Default
			26: Reverse command 29: Output when frequency ≥ Pr.02-34 30: Output when frequency < Pr.02-34 31: Y-connection for the motor coil 32: Δ-connection for the motor coil 33: Zero speed (actual output frequency) 34: Zero speed including STOP (output frequency) 35: Error output selection 1 (Pr.06-23) 36: Error output selection 2 (Pr.06-24) 37: Error output selection 3 (Pr.06-25) 38: Error output selection 4 (Pr.06-26) 40: Speed reached (including STOP) 42: Crane function 43: Motor speed detection 44: Low current output (use with Pr.06-71–06-73) 45: UVW output electromagnetic valve switch 46: Master dEb output 51: Analog output control for RS-485 interface 53: Fire mode indication 67: Analog input level reached 69: Preheating output indication 75: Forward RUN status 76: Reverse RUN status 77: Program Running Indication 78: Program Step Completed Indication 79: Program Running Completed Indication 80: Program Running Paused Indication 81: Multi-pump system error display (only master)	
✓	02-18	Multi-function output direction	0000h–FFFFh (0: N.O.; 1: N.C.)	0000h
✓	02-19	Terminal counting value reached (returns to 0)	0–65500	0
✓	02-20	Preliminary counting value reached (does not return to 0)	0–65500	0
✓	02-22	Desired frequency reached 1	0.00–599.00 Hz	60.00/ 50.00
✓	02-23	The width of the desired frequency reached 1	0.00–599.00 Hz	2.00
✓	02-24	Desired frequency reached 2	0.00–599.00 Hz	60.00/ 50.00

	Pr.	Explanation	Settings	Default
✓	02-25	The width of the desired frequency reached 2	0.00–599.00 Hz	2.00
✓	02-34	Output frequency setting for multi-function output terminal	0.00–599.00 Hz	0.00
✓	02-35	External operation control selection after reset and reboot	0: Disable 1: Drive runs if the RUN command remains after reset or reboot.	0
✓	02-47	Motor zero-speed level	0–65535 rpm	0
	02-50	Display the status of multi-function input terminal	Monitor the status of multi-function input terminals	Read only
	02-51	Display the status of multi-function output terminal	Monitor the status of multi-function output terminals	Read only
	02-54	Display the frequency command executed by external terminal	0.00–599.00 Hz (Read only)	Read only
	02-58	Multi-function output terminal (function 42): brake frequency check point	0.00–599.00 Hz	0.00
✓	02-72	Preheating output current level	0–100%	0
✓	02-73	Preheating output cycle	0–100%	0
✓	02-81	EF active when terminal count value reached	0: Terminal count value reached, no EF displays (continue operation) 1: Terminal count value reached, EF is active	0
✓	02-82	Initial Frequency command (F) mode after stop	0: Use current Frequency command 1: Use zero Frequency command 2: Refer to Pr.02-83 to setup	0
✓	02-83	Initial Frequency command (F) setting after stop	0.00–599.0 Hz	60.00

03 Analog Input / Output Parameters

	Pr.	Explanation	Settings	Default
✓	03-00	Analog input selection (AI)	0: No function 1: Frequency command 4: PID target value 5: PID feedback signal 6: Thermistor (PTC) input value 11: PT100 thermistor input value 12: Auxiliary frequency input 13: PID compensation value	1
✓	03-03	Analog input bias (AVI)	-100.0–100.0%	0
✓	03-04	Analog input bias (ACI)	-100.0–100.0%	0
✓	03-07	Positive / negative bias mode (AVI)	0: No bias 1: Lower than or equal to bias 2: Greater than or equal to bias 3: The absolute value of the bias voltage while serving as the center 4: Bias serves as the center	0
✓	03-08	Positive / negative bias mode (ACI)		
✓	03-10	Reverse setting when analog signal input is negative frequency	0: Negative frequency input is not allowed. The digital keypad or external terminal controls the forward and reverse direction. 1: Negative frequency input is allowed. Positive frequency = run in a forward direction. Negative frequency = run in a reverse direction. The digital keypad or external terminal control cannot change the running direction.	0
✓	03-11	Analog input gain (AVI)	-500.0–500.0%	100.0
✓	03-12	Analog input gain (ACI)	-500.0–500.0%	100.0
✓	03-15	Analog input filter time (AVI)	0.00–20.00 sec.	0.01
✓	03-16	Analog input filter time (ACI)	0.00–20.00 sec.	0.01
	03-19	Signal loss selection for analog input 4–20 mA	0: Disable 1: Continue operation at the last frequency 2: Decelerate to 0 Hz 3: Stop immediately and display “ACE”	0
✓	03-20	AFM Analog Output Selection	0: Output frequency (Hz) 1: Frequency command (Hz) 2: Motor speed (Hz) 3: Output current (rms) 4: Output voltage	0

	Pr.	Explanation	Settings	Default
			5: DC bus voltage 6: Power factor 7: Power 9: AVI 12: Iq current command 13: Iq feedback value 14: Id current command 15: Id feedback value 16: Vq-axis voltage command 17: Vd-axis voltage command 21: RS-485 analog output 23: Constant voltage output	
✓	03-21	AFM Analog Output Gain	0.0–500.0%	100.0
✓	03-22	AFM Analog Output in REV Direction	0: Absolute value in output voltage 1: Reverse output 0 V; forward output 0–10 V 2: Reverse output 5–0 V; forward output 5–10 V	0
✓	03-27	AFM output bias	-100.00–100.00%	0.00
✓	03-28	AI terminal input selection	0: 0–10 V (Pr.03-63–03-68 is valid) 1: 0–20 mA (Pr.03-57–03-62 is valid) 2: 4–20 mA (Pr.03-57–03-62 is valid)	0
✓	03-32	AFM DC output setting level	0.00–100.00%	0.00
✓	03-35	AFM output filter time	0.00–20.00 sec.	0.01
✓	03-39	VR input selection	0: Disable 1: Frequency command	1
✓	03-40	VR input bias	-100.0–100.0%	0.0
✓	03-41	VR positive / negative bias	0: No bias 1: Lower than or equal to bias 2: Greater than or equal to bias 3: The absolute value of the bias voltage while serving as the center 4: Bias serves as the center	0
✓	03-42	VR gain	-500.0–500.0%	100.0
✓	03-43	VR filter time	0.00–2.00 sec.	0.01
✓	03-44	Multi-function output (MO) by AI level source	0: AVI 1: ACI	0
✓	03-45	AI level 1 (upper limit)	-100.00–100.00%	50.00
✓	03-46	AI level 2 (lower limit)	-100.00–100.00%	10.00

	Pr.	Explanation	Settings	Default
↗	03-50	Analog input curve selection	0: Normal curve 1: Three-point curve of AVI (& AI10) 2: Three-point curve of ACI (& AI11)	0
↗	03-57	ACI lowest point	Pr.03-28 = 1, 0.00–10.00 V Pr.03-28 ≠ 1, 0.00–20.00 mA	4.00
↗	03-58	ACI proportional lowest point	0.00–100.00%	0.00
↗	03-59	ACI mid-point	Pr.03-28 = 1, 0.00–10.00 V Pr.03-28 ≠ 1, 0.00–20.00 mA	12.00
↗	03-60	ACI proportional mid-point	0.00–100.00%	50.00
↗	03-61	ACI highest point	Pr.03-28 = 1, 0.00–10.00 V Pr.03-28 ≠ 1, 0.00–20.00 mA	20.00
↗	03-62	ACI proportional highest point	0.00–100.00%	100.00
↗	03-63	AVI voltage lowest point	0.00–10.00 V	0.00
↗	03-64	AVI proportional lowest point	-100.00–100.00%	0.00
↗	03-65	AVI voltage mid-point	0.00–10.00 V	5.00
↗	03-66	AVI proportional mid-point	-100.00–100.00%	50.00
↗	03-67	AVI voltage highest point	0.00–10.00 V	10.00
↗	03-68	AVI proportional highest point	-100.00–100.00%	100.00

04 Multi-step Speed Parameters

	Pr.	Explanation	Settings	Default
↗	04-00	1st step speed frequency	0.00–599.00 Hz	0.00
↗	04-01	2nd step speed frequency	0.00–599.00 Hz	0.00
↗	04-02	3rd step speed frequency	0.00–599.00 Hz	0.00
↗	04-03	4th step speed frequency	0.00–599.00 Hz	0.00
↗	04-04	5th step speed frequency	0.00–599.00 Hz	0.00
↗	04-05	6th step speed frequency	0.00–599.00 Hz	0.00
↗	04-06	7th step speed frequency	0.00–599.00 Hz	0.00
↗	04-07	8th step speed frequency	0.00–599.00 Hz	0.00
↗	04-08	9th step speed frequency	0.00–599.00 Hz	0.00
↗	04-09	10th step speed frequency	0.00–599.00 Hz	0.00
↗	04-10	11th step speed frequency	0.00–599.00 Hz	0.00
↗	04-11	12th step speed frequency	0.00–599.00 Hz	0.00
↗	04-12	13th step speed frequency	0.00–599.00 Hz	0.00
↗	04-13	14th step speed frequency	0.00–599.00 Hz	0.00
↗	04-14	15th step speed frequency	0.00–599.00 Hz	0.00
	04-68	Flaying catch retry time	0–65535 sec.	0
	04-69	Magnetization time	0–65535	0

05 Motor Parameters

	Pr.	Explanation	Settings	Default
	05-00	Motor parameter auto-tuning	0: No function 1: Dynamic test for induction motor (IM) 2: Static test for induction motor (IM) 13: High frequency stall test for PM	0
	05-01	Full-load current for induction motor 1 (A)	10–120% of the drive's rated current	Depending on the model power
✓	05-02	Rated power for induction motor 1 (kW)	0.00–655.35 kW	Depending on the model power
✓	05-03	Rated speed for induction motor 1 (rpm)	0–xxxxx rpm (Depending on the motor's number of poles) 1710 (60 Hz, 4 poles); 1410 (50 Hz, 4 poles)	Depending on the motor's number of poles
	05-04	Number of poles for induction motor 1	2–20	4
	05-05	No-load current for induction motor 1 (A)	0.00–Pr.05-01 default	Depending on the model power
	05-06	Stator resistance (Rs) for induction motor 1	0.000–65.535 Ω	Depending on the model power
	05-07	Rotor resistance (Rr) for induction motor 1	0.000–65.535 Ω	0.000
	05-08	Magnetizing inductance (Lm) for induction motor 1	0.0–6553.5 mH	0.0
	05-09	Stator inductance (Lx) for induction motor 1	0.0–6553.5 mH	0.0
	05-13	Full-load current for induction motor 2 (A)	10–120% of the drive's rated current	Depending on the model power
✓	05-14	Rated power for induction motor 2 (kW)	0.00–655.35 kW	Depending on the model power
✓	05-15	Rated speed for induction motor 2 (rpm)	0–xxxxx rpm (Depending on the motor's number of poles) 1710 (60 Hz, 4 poles); 1410 (50 Hz, 4 poles)	Depending on the motor's number of poles
	05-16	Number of poles for induction motor 2	2–20	4

Pr.	Explanation	Settings	Default
05-17	No-load current for induction motor 2 (A)	0.00–Pr.05-13 default	Depending on the model power
05-18	Stator resistance (Rs) for induction motor 2	0.000–65.535 Ω	Depending on the model power
05-19	Rotor resistance (Rr) for induction motor 2	0.000–65.535 Ω	0.000
05-20	Magnetizing inductance (Lm) for induction motor 2	0.0–6553.5 mH	0.0
05-21	Stator inductance (Lx) for induction motor 2	0.0–6553.5 mH	0.0
05-22	Multi-motor (induction) selection	1: Motor 1 2: Motor 2	1
✓ 05-23	Frequency for Y-connection / △-connection switch for an induction motor	0.00–599.00 Hz	60.00
05-24	Y-connection / △-connection switch for an induction motor	0: Disable 1: Enable	0
✓ 05-25	Delay time for Y-connection / △-connection switch for an induction motor	0.000–60.000 sec.	0.200
05-26	Accumulated Watt-second for a Motor in Low Word (W-msec.)	Read only	0.0
05-27	Accumulated Watt-second for a Motor in High Word (W-sec.)	Read only	0.0
05-28	Accumulated Watt-hour for a motor (W-hour)	Read only	0.0
05-29	Accumulated Watt-hour for a motor in low word (kW-hour)	Read only	0.0
05-30	Accumulated Watt-hour for a motor in high word (MW-hour)	Read only	0.0
05-31	Accumulated motor operation time (minutes)	0–1439 min.	0

Pr.	Explanation	Settings	Default
05-32	Accumulated motor operation time (days)	0–65535 days	0
05-33	Induction motor (IM) or permanent magnet synchronous AC motor (PM) selection	0: Induction motor 1: SPM 2: IPM	00
05-34	Full-load current for a permanent magnet synchronous AC motor	0–120% of the drive's rated current	Depending on the model power
05-35	Rated power for a permanent magnet synchronous AC motor	0.00–655.35 kW	Depending on the motor power
05-36	Rated speed for a permanent magnet synchronous AC motor	0–65535 rpm	2000
05-37	Number of poles for a permanent magnet synchronous AC motor	0–65535	10
05-39	Stator resistance for a permanent magnet synchronous AC motor	0.000–65.535 Ω	0.000
05-40	Permanent magnet synchronous AC motor Ld	0.00–655.35 mH	0.00
05-41	Permanent magnet synchronous AC motor Lq	0.00–655.35 mH	0.00
05-43	Ke parameter of a permanent magnet synchronous AC motor	0–65535 (Unit: V/krpm)	0

06 Protection Parameters (1)

	Pr.	Explanation	Settings	Default
✓	06-00	Low voltage level	115V / 230V models: 150.0–220.0 V_{DC} 460V models: 300.0–440.0 V_{DC}	180.0 360.0
✓	06-01	Over-voltage stall prevention	0: Disabled 115V / 230V models: 0.0–450.0 V_{DC} 460V models: 0.0–900.0 V_{DC}	 380.0 760.0
✓	06-02	Selection for over-voltage stall prevention	0: Traditional over-voltage stall prevention 1: Smart over-voltage stall prevention	0
✓	06-03	Over-current stall prevention during acceleration	Normal load: 0–150% Heavy load: 0–200% (100% corresponds to the rated current of the drive)	120 180
✓	06-04	Over-current stall prevention during operation	Normal load: 0–150% Heavy load: 0–200% (100% corresponds to the rated current of the drive)	120 180
✓	06-05	Acceleration / deceleration time selection for stall prevention at constant speed	0: By current acceleration / deceleration time 1: By the first acceleration / deceleration time 2: By the second acceleration / deceleration time 3: By the third acceleration / deceleration time 4: By the fourth acceleration / deceleration time 5: By Auto-acceleration / auto-deceleration	0
✓	06-06	Over-torque detection selection (motor 1)	0: No function 1: Continue operation after over-torque detection during constant speed operation 2: Stop after over-torque detection during constant speed operation 3: Continue operation after over-torque detection during RUN 4: Stop after over-torque detection during RUN	0
✓	06-07	Over-torque detection level (motor 1)	10–250% (100% corresponds to the rated current of the drive)	120
✓	06-08	Over-torque detection time (motor 1)	0.1–60.0 sec.	0.1
✓	06-09	Over-torque detection selection (motor 2)	0: No function 1: Continue operation after over-torque detection during constant speed operation 2: Stop after over-torque detection during constant speed operation 3: Continue operation after over-torque detection during RUN 4: Stop after over-torque detection during RUN	0

	Pr.	Explanation	Settings	Default
✓	06-10	Over-torque detection level (motor 2)	10–250% (100% corresponds to the rated current of the drive)	120
✓	06-11	Over-torque detection time (motor 2)	0.1–60.0 sec.	0.1
✓	06-13	Electronic thermal relay selection (motor 1)	0: Inverter motor (with external forced cooling) 1: Standard motor (motor with fan on shaft) 2: Disable	2
✓	06-14	Electronic thermal relay action time (motor 1)	30.0–600.0 sec.	60.0
✓	06-15	Temperature level overheat (OH) warning	0.0–110.0°C	Depending on the model power
✓	06-16	Stall prevention limit level (Weak Magnetic Area Current Stall Prevention Level)	0–100% (refer to Pr.06-03)	100
	06-17	Fault record 1	0: No fault record	0
	06-18	Fault record 2	1: Over-current during acceleration (ocA)	0
	06-19	Fault record 3	2: Over-current during deceleration (ocd)	0
	06-20	Fault record 4	3: Over-current during steady operation (ocn)	0
	06-21	Fault record 5	4: Ground fault (GFF)	0
	06-22	Fault record 6	6: Over-current at stop (ocS)	0
		Fault record 7 (Pr.14-70)	7: Over-voltage during acceleration (ovA)	
		Fault record 8 (Pr.14-71)	8: Over-voltage during deceleration (ovd)	
		Fault record 9 (Pr.14-72)	9: Over-voltage at constant speed (ovn)	
		Fault record 10 (Pr.14-73)	10: Over-voltage at stop (ovS)	
			11: Low-voltage during acceleration (LvA)	
			12: Low-voltage during deceleration (Lvd)	
			13: Low-voltage at constant speed (Lvn)	
			14: Low-voltage at stop (LvS)	
			15: Phase loss protection (OrP)	
			16: IGBT overheating (oH1)	
			18: IGBT temperature detection failure (tH1o)	
			21: Overload (oL)	
			22: Electronic thermal relay 1 protection (EoL1)	
			23: Electronic thermal relay 2 protection (EoL2)	
			24: Motor overheating (PTC / PT100) (oH3)	
			26: Over-torque 1 (ot1)	
			27: Over-torque 2 (ot2)	
			28: Under current (uC)	

	Pr.	Explanation	Settings	Default
			31: EEPROM read error (cF2) 33: U-phase error (cd1) 34: V-phase error (cd2) 35: W-phase error (cd3) 36: cc hardware failure (Hd0) 37: oc hardware failure (Hd1) 40: Auto-tuning error (AUE) 41: PID loss ACI (AFE) 48: ACI loss (ACE) 49: External fault (EF) 50: Emergency stop (EF1) 51: External base block (bb) 52: Password is locked (Pcod) 54: Illegal command (CE1) 55: Illegal data address (CE2) 56: Illegal data value (CE3) 57: Data is written to read-only address (CE4) 58: Modbus transmission time-out (CE10) 63: Over-slip (oSL) 72: S1 internal loop detection error (STL1) 76: STO (STo) 77: S2 internal loop detection error (STL2) 78: S3 internal loop detection error (STL3) 82: Output phase loss U phase (OPL1) 83: Output phase loss V phase (OPL2) 84: Output phase loss W phase (OPL3) 87: Overload protection at low frequency (oL3) 142: Auto-tune error 1 (AUE1) 143: Auto-tune error 2 (AUE2) 149: Total resistance measurement fault (AUE5) 150: No-load current IO measurement fault (AUE6) 151: dq axis inductance measurement fault (AUE7) 152: High frequency injection measurement fault (AUE8) 157: Pump PID feedback error (dEv)	
✓	06-23	Fault output option 1	0–65535 (refer to bit table for fault code)	0
✓	06-24	Fault output option 2	0–65535 (refer to bit table for fault code)	0
✓	06-25	Fault output option 3	0–65535 (refer to bit table for fault code)	0
✓	06-26	Fault output option 4	0–65535 (refer to bit table for fault code)	0

	Pr.	Explanation	Settings	Default
✓	06-27	Electronic thermal relay selection 2 (motor 2)	0: Inverter motor (with external forced cooling) 1: Standard motor (motor with fan on the shaft) 2: Disable	2
✓	06-28	Electronic thermal relay action time 2 (motor 2)	30.0–600.0 sec.	60.0
✓	06-29	PTC detection selection	0: Warn and continue operation 1: Fault and ramp to stop 2: Fault and coast to stop 3: No warning	0
✓	06-30	PTC level	0.0–100.0%	50.0
	06-31	Frequency command for malfunction	0.00–599.00 Hz	Read only
	06-32	Output frequency at malfunction	0.00–599.00 Hz	Read only
	06-33	Output voltage at malfunction	0.0–6553.5 V	Read only
	06-34	DC bus voltage at malfunction	0.0–6553.5 V	Read only
	06-35	Output current at malfunction	0.00–655.35 Amp	Read only
	06-36	IGBT temperature at malfunction	-3276.7–3276.7°C	Read only
	06-38	Motor speed at malfunction	-32767–32767 rpm	Read only
	06-40	Status of the multi-function input terminal at malfunction	0000h–FFFFh	Read only
	06-41	Status of the multi-function output terminal at malfunction	0000h–FFFFh	Read only
	06-42	Drive status at malfunction	0000h–FFFFh	Read only
✓	06-44	STO latch selection (only for models built-in with STO function)	0: STO Latch 1: STO No Latch	0
✓	06-45	Output phase loss detection action (OPHL)	0: Warn and continue operation 1: Fault and ramp to stop 2: Fault and coast to stop 3: No warning	3

	Pr.	Explanation	Settings	Default
✓	06-46	Detection time for output phase loss	0.000–65.535 sec.	0.500
✓	06-47	Current detection level for output phase loss	0.00–100.00%	1.00
✓	06-48	DC brake time for output phase loss	0.000–65.535 sec.	0.000
✓	06-49	LvX auto-reset	0: Disable 1: Enable	0
✓	06-53	Input phase loss detection action (OrP)	0: Fault and ramp to stop 1: Fault and coast to stop	0
✓	06-55	Derating protection	0: Constant rated current and limit carrier wave by load current and temperature 1: Constant carrier frequency and limit load current by setting carrier wave 2: Constant rated current (same as setting 0), but close current limit	0
✓	06-56	PT100 voltage level 1	0.000–10.000 V	5.000
✓	06-57	PT100 voltage level 2	0.000–10.000 V	7.000
✓	06-58	PT100 level 1 frequency protection	0.00–599.00 Hz	0.00
✓	06-59	PT100 activation level 1 protection frequency delay time	0–6000 sec.	60
✓	06-60	Software detection GFF current level	0.0–6553.5%	60.0
✓	06-61	Software detection GFF filter time	0.00–655.35 sec.	0.10
	06-63	Operation time of fault record 1 (Days)	0–65535 days	Read only
	06-64	Operation time of fault record 1 (Minutes)	0–1439 min.	Read only
	06-65	Operation time of fault record 2 (Days)	0–65535 days	Read only
	06-66	Operation time of fault record 2 (Minutes)	0–1439 min.	Read only
	06-67	Operation time of fault record 3 (Days)	0–65535 days	Read only
	06-68	Operation time of fault record 3 (Minutes)	0–1439 min.	Read only

	Pr.	Explanation	Settings	Default
	06-69	Operation time of fault record 4 (Days)	0–65535 days	Read only
	06-70	Operation time of fault record 4 (Minutes)	0–1439 min.	Read only
↗	06-71	Low current setting level	0.0–100.0%	0.0
↗	06-72	Low current detection time	0.00–360.00 sec.	0.00
↗	06-73	Low current action	0 : No function 1 : Fault and coast to stop 2 : Fault and ramp to stop by the second deceleration time 3 : Warn and continue operation	0
	06-80	Fire mode	0: Disable 1: Forward (counterclockwise) operation 2: Reverse (clockwise) operation	0
↗	06-81	Operating frequency when running fire mode	0.0 – 599.00 Hz	60.00
	06-88	Operation times when running fire mode	0–65535 times	Read only
	06-90	Operation time of fault record 5 (Day)	0–65535 days	Read only
	06-91	Operation time of fault record 5 (Min.)	0–1439 min.	Read only
	06-92	Operation time of fault record 6 (Day)	0–65535 days	Read only
	06-93	Operation time of fault record 6 (Min.)	0–1439 min.	Read only

07 Special Parameters

	Pr.	Explanation	Settings	Default
✓	07-00	Software brake chopper action level	115V / 230V models: 350.0–450.0 V_{DC} 460V models: 700.0–900.0 V_{DC}	370.0 740.0
✓	07-01	DC brake current level	0–100%	0
✓	07-02	DC brake time at start-up	0.0–60.0 sec.	0.0
✓	07-03	DC brake time at STOP	0.0–60.0 sec.	0.0
✓	07-04	DC brake frequency at STOP	0.00–599.00 Hz	0.00
✓	07-05	Voltage increasing gain	1–200%	100
✓	07-06	Restart after momentary power loss	0: Stop operation 1: Speed tracking by the speed before the power loss 2: Speed tracking by the minimum output frequency	0
✓	07-07	Allowed power loss duration	0.0–20.0 sec.	2.0
✓	07-08	Base Block time	0.0–60.0 sec.	0.5
✓	07-09	Current limit of speed tracking	20–200%	100
✓	07-10	Restart after fault action	0: Stop operation 1: Speed tracking by current speed 2: Speed tracking by minimum output frequency	0
✓	07-11	Number of times of restart after fault	0–10	0
✓	07-12	Speed tracking during start-up	0: Disable 1: Speed tracking by the maximum output frequency 2: Speed tracking by the motor frequency at start 3: Speed tracking by the minimum output frequency	0
✓	07-13	dEb function selection	0: Disable 1: dEb with auto-acceleration / auto-deceleration, the drive does not output the frequency after the power is restored. 2: dEb with auto-acceleration / auto-deceleration, the drive outputs the frequency after the power is restored.	0
✓	07-15	Dwell time at acceleration	0.00–600.00 sec.	0.00
✓	07-16	Dwell frequency at acceleration	0.00–599.00 Hz	0.00
✓	07-17	Dwell time at deceleration	0.00–600.00 sec.	0.00
✓	07-18	Dwell frequency at	0.00–599.00 Hz	0.00

	Pr.	Explanation	Settings	Default
		deceleration		
✓	07-19	Fan cooling control	0: Fan is always ON 1: Fan is OFF after the AC motor drive stops for one minute. 2: Fan is ON when the AC motor drive runs, fan is OFF when the AC motor drive stops. 3: Fan turns ON when IGBT temperature reaches around 60°C. 5: Fan turns ON/OFF when the AC motor drive runs/stops and stays in Stand By mode at zero speed.	3
✓	07-20	Emergency stop (EF) & force to stop selection	0: Coast to stop 1: Stop by the first deceleration time 2: Stop by the second deceleration time 3: Stop by the third deceleration time 4: Stop by the fourth deceleration time 5: System deceleration 6: Automatic deceleration	0
✓	07-21	Automatic energy-saving selection	0: Disable 1: Enable	0
✓	07-23	Automatic voltage regulation (AVR) function	0: Enable AVR 1: Disable AVR 2: Disable AVR during deceleration	0
✓	07-24	Torque command filter time (V/F and SVC control mode)	0.001–10.000 sec.	0.050
✓	07-25	Slip compensation filter time (V/F and SVC control mode)	0.001–10.000 sec.	0.100
✓	07-26	Torque compensation gain	IM: 0–10 (when Pr.05-33 = 0) PM: 0–5000 (when Pr.05-33 = 1 or 2)	1
✓	07-27	Slip compensation gain	0.00–10.00	0.00 (Default value is 1.00 in SVC mode)
✓	07-29	Slip deviation level	0.0–100.0% 0: No detection	0
✓	07-30	Over-slip deviation detection time	0.0–10.0 sec.	1.0

	Pr.	Explanation	Settings	Default
↗	07-31	Over-slip deviation treatment	0: Warn and continue operation 1: Fault and ramp to stop 2: Fault and coast to stop 3: No warning	0
↗	07-32	Motor oscillation compensation factor	0–10000	1000
↗	07-33	Auto-restart interval of fault	0.0–6000.0 sec.	60.0
	07-38	PMSVC voltage feed forward gain	0.50–2.00	1.00
↗	07-62	dEb gain (Kp)	0–65535	8000
↗	07-63	dEb gain (Ki)	0–65535	150
↗	07-71	Torque compensation gain (motor 2)	IM: 0–10 (when Pr.05-33 = 0) PM: 0–5000 (when Pr.05-33 = 1 or 2)	1
↗	07-72	Slip compensation gain (motor 2)	0.00–10.00	0.00 (Default value is 1 in SVC mode)

08 High-function PID Parameters

	Pr.	Explanation	Settings	Default
✓	08-00	Terminal selection of PID feedback	0: No function 1: Negative PID feedback: by analog input (Pr.03-00) 4: Positive PID feedback: by analog input (Pr.03-00) 7: Negative PID feedback: by communication protocols 8: Positive PID feedback: by communication protocols	0
✓	08-01	Proportional gain (P)	0.0–1000.0 (When Pr.08-23 bit1 = 0) 0.00–100.00 (When Pr.08-23 bit1 = 1)	1.00
✓	08-02	Integral time (I)	0.00–100.00 sec.	1.00
✓	08-03	Differential time (D)	0.00–1.00 sec.	0.00
✓	08-04	Upper limit of integral control	0.0–100.0%	100.0
✓	08-05	PID output command limit (positive limit)	0.0–100.0%	100.0
✓	08-06	PID feedback value by communication protocol	-200.00–200.00%	0.00
✓	08-07	PID delay time	0.0–2.5 sec.	0.0
✓	08-08	Feedback signal detection time	0.0–3600.0 sec.	0.0
✓	08-09	Feedback signal fault treatment	0: Warn and continue operation 1: Fault and ramp to stop 2: Fault and coast to stop 3: Warn and operate at last frequency	0
✓	08-10	Sleep level	0.00–599.00 Hz	0.00
✓	08-11	Wake-up level	0.00–599.00 Hz	0.00
✓	08-12	Sleep delay time	0.0–6000.0 sec.	0.0
✓	08-13	PID feedback signal error deviation level	1.0–50.0%	10.0
✓	08-14	PID feedback signal error deviation time	0.1–300.0 sec.	5.0
✓	08-15	PID feedback signal filter time	0.1–300.0 sec.	5.0
✓	08-16	PID compensation selection	0: Parameter setting 1: Analog input	0
✓	08-17	PID compensation	-100.0–100.0%	0
	08-18	Sleep mode function setting	0: Refer to PID output command 1: Refer to PID feedback signal	0
✓	08-19	Wake-up integral limit	0.0–200.0%	50.0

	Pr.	Explanation	Settings	Default
	08-20	PID mode selection	0: Serial connection 1: Parallel connection	0
	08-21	Enable PID to change the operation direction	0: Operating direction can be changed 1: Operating direction cannot be changed	0
✓	08-22	Wake-up delay time	0.00–600.00 sec.	0.00
✓	08-23	PID control flag	bit 0 = 1: PID running in reverse follows the setting for Pr.00-23. bit 0 = 0: PID running in reverse refers to PID calculated value. bit 1 = 1: two decimal places for PID Kp bit 1 = 0: one decimal place for PID Kp	2
✓	08-26	PID output command limit (reverse limit)	0.0–100.0%	100.0
✓	08-27	Acceleration / deceleration Time for PID command	0.00–655.35 sec.	0.00
	08-31	Proportional gain 2	0.00–100.00	1.00
	08-32	Integral time 2	0.00–100.00 sec.	1.00
	08-33	Differential time 2	0.00–1.00 sec.	0.00
	08-61	Feedback of PID physical quantity value	1.0–99.9	99.9
	08-62	Treatment of the erroneous PID feedback level	0: Warn and keep operating (no treatment) 1: Fault and coast to stop 2: Fault and ramp to stop 3: Ramp to stop and restart after time set at Pr.08-63 (Without displaying fault and warning) 4: Ramp to stop and restart after time set at Pr.08-63. The number of times of restart depends on the setting for Pr.08-64.	0
	08-63	Delay time for restart of erroneous PID deviation level	1–9999 sec	60
✓	08-64	Number of times of restart after PID error	0–1000 times	0

	Pr.	Explanation	Settings	Default
✓	08-65	PID target value source	0: Frequency command (Pr.00-20, Pr.00-30) 1: Pr.08-66 setting 2: RS-485 communication input 3: External analog input (refer to Pr.03-00) 4: CANopen communication card 6: Communication card (does not include CANopen card) 7: Digital keypad potentiometer knob	0
✓	08-66	PID target value setting	-100.00–100.00%	50.00
✓	08-67	Master and auxiliary reveres running cutoff frequency	0.0–100.0%	10.0
✓	08-68	PID deviation limit	0.00–100.00%	0.00
✓	08-69	Integral separation level	0.00–100.00%	0.00
	08-70	Smart start-up level	0.00–100.00%	5.00
✓	08-71	Smart start-up frequency command	0.00–599.00 Hz	0.00
✓	08-72	Smart start-up acceleration time	0.00–600.00 sec.	3.00
✓	08--75	PID2 parameter switch condition	0: No switching (refer to Pr.08-01–Pr.08-03) 1: Auto-switch based on the output frequency 2: Auto-switch based on the deviation	0
✓	08-76	PID2 parameter switch deviation 1	0.00–Pr.08-77 setting (Unit: %)	10.00
✓	08-77	PID2 parameter switch deviation 2	Pr.08-76–100.00%	40.00
✓	08-78	Allowed reverse running time after start-up	0.0–6553.5 sec.	0.0

09 Communication Parameters

	Pr.	Explanation	Settings	Default
✓	09-00	Communication address	1–254	1
✓	09-01	COM1 transmission speed	4.8–38.4 Kbps	9.6
✓	09-02	COM1 transmission fault treatment	0: Warn and continue operation 1: Fault and ramp to stop 2: Fault and coast to stop 3: No warning, no fault, and continue operation	3
✓	09-03	COM1 time-out detection	0.0–100.0 sec.	0.0
✓	09-04	COM1 communication protocol	1: 7, N, 2 (ASCII) 2: 7, E, 1 (ASCII) 3: 7, O, 1 (ASCII) 4: 7, E, 2 (ASCII) 5: 7, O, 2 (ASCII) 6: 8, N, 1 (ASCII) 7: 8, N, 2 (ASCII) 8: 8, E, 1 (ASCII) 9: 8, O, 1 (ASCII) 10: 8, E, 2 (ASCII) 11: 8, O, 2 (ASCII) 12: 8, N, 1 (RTU) 13: 8, N, 2 (RTU) 14: 8, E, 1 (RTU) 15: 8, O, 1 (RTU) 16: 8, E, 2 (RTU) 17: 8, O, 2 (RTU)	1
✓	09-09	Communication response delay time	0.0–200.0 ms	2.0
	09-10	Communication main frequency	0.00–599.00 Hz	60.00
✓	09-11	Block transfer 1	0–65535	0
✓	09-12	Block transfer 2	0–65535	0
✓	09-13	Block transfer 3	0–65535	0
✓	09-14	Block transfer 4	0–65535	0
✓	09-15	Block transfer 5	0–65535	0
✓	09-16	Block transfer 6	0–65535	0
✓	09-17	Block transfer 7	0–65535	0
✓	09-18	Block transfer 8	0–65535	0
✓	09-19	Block transfer 9	0–65535	0
✓	09-20	Block transfer 10	0–65535	0

	Pr.	Explanation	Settings	Default
↗	09-21	Block transfer 11	0–65535	0
↗	09-22	Block transfer 12	0–65535	0
↗	09-23	Block transfer 13	0–65535	0
↗	09-24	Block transfer 14	0–65535	0
↗	09-25	Block transfer 15	0–65535	0
↗	09-26	Block transfer 16	0–65535	0
	09-30	Communication decoding method	0: Decoding method 1 1: Decoding method 2	1
	09-31	Internal Communication Protocol	0: Modbus 485 -21: Pump Master -22: Pump Slave 1 -23: Pump Slave 2 -24: Pump Slave 3	0

10 Speed Feedback Control Parameters

	Pr.	Explanation	Settings	Default
↗	10-16	Pulse input type setting	0: Disabled (default) 5: Single-phase input 6: PWM signal input	0
↗	10-29	Upper limit of frequency deviation	0.00–200.00 Hz	20.00
↗	10-31	I/F mode, current command	0–150% rated current of the motor	40
↗	10-32	PM FOC sensorless speed estimator bandwidth	0.00–600.00 Hz	5.00
↗	10-34	PM sensorless speed estimator low-pass filter gain	0.00–655.35	1.00
↗	10-42	Initial angle detection pulse value	0.0–3.0	1.0
↗	10-49	Zero voltage time during start-up	00.000–60.000 sec.	00.000
↗	10-51	Injection frequency	0–1200 Hz	500
↗	10-52	Injection magnitude	115V / 230V models: 100.0 V 460V models: 200.0 V Note: The setting range varies depending on the voltage	15.0 30.0
↗	10-53	Angle detection method	0: Disabled 1: Force attracting the rotor to zero degrees 2: High frequency injection 3: Pulse injection	0

11 Advanced Parameters

	Pr.	Explanation	Settings	Default
	11-00	System control	bit 3: Dead time compensation closed bit 7: Save or do not save the frequency	0
	11-41	PWM mode selection	0: Two-phase modulation mode 2: Space vector modulation mode	2
↙	11-42	System control flag	0000–FFFFh	0000

12 Function Parameters

	Pr.	Explanation	Settings	Default
✓	12-00	Set point deviation level	0–100%	0
✓	12-01	Detection time of set point deviation level	1–9999 sec.	10
✓	12-02	Offset level of liquid leakage	0–50%	0
✓	12-03	Liquid leakage change detection	0: Disable 0–100%	0
✓	12-04	Time setting for liquid leakage change	0: Disable 0.1–10.0 sec.	0.5
	12-05	Multi-pump control mode	0: Disable 1: Fixed time circulation (alternative operation) 2: Fixed quantity control (multi-pump operating at constant pressure)	0
✓	12-07	Multi-pump's fixed time circulation period	1–65535 (minute)	60
✓	12-08	Frequency to start switching pumps	0.00 Hz–FMAX (Pr.01-00)	60.00
✓	12-09	Time detected when pump reaches the starting frequency	0.0–3600.0 sec.	1.0
✓	12-10	Frequency to stop switching pumps	0.00 Hz–FMAX (Pr.01-00)	48.00
✓	12-11	Time detected when pump reaches the stopping frequency	0.0–3600.0 sec.	1.0
✓	12-12	Pump's frequency at time-out (disconnection)	0.00–FMAX (Pr.01-00)	0.00
	12-13	Pump's error treatment	bit0: whether to switch to an alternative pump when operation pump error occurred. 0: Stop all pump actions. 1: Switch to an alternative pump. bit1: Standby or stop after resetting from error. 0: Standby after reset. 1: Stop after reset. bit2: To run a pump or not when an error is occurred. 0: Do not start. 1: Select an alternative pump.	1
	12-14	Selection of pump start-up sequence	0: By pump's ID # 1: By the running time.	1

	Pr.	Explanation	Settings	Default
✓	12-15	Running time of multi-pump under alternative operation	0.0–360.0 sec.	60.0
✓	12-20	Simple positioning stop frequency 0	0.00–599.00 Hz	0.00
✓	12-21	Simple positioning stop frequency 1	0.00–599.00 Hz	5.00
✓	12-22	Simple positioning stop Frequency 2	0.00–599.00 Hz	10.00
✓	12-23	Simple positioning stop frequency 3	0.00–599.00 Hz	20.00
✓	12-24	Simple positioning stop frequency 4	0.00–599.00 Hz	30.00
✓	12-25	Simple positioning stop frequency 5	0.00–599.00 Hz	40.00
✓	12-26	Simple positioning stop frequency 6	0.00–599.00 Hz	50.00
✓	12-27	Simple positioning stop frequency 7	0.00–599.00 Hz	60.00
✓	12-28	Delay time of simple positioning stop 0	0.00–600.00 sec.	0.00
✓	12-29	Delay time of simple positioning stop 1	0.00–600.00 sec.	0.00
✓	12-30	Delay time of simple positioning stop 2	0.00–600.00 sec.	0.00
✓	12-31	Delay time of simple positioning stop 3	0.00–600.00 sec.	0.00
✓	12-32	Delay time of simple Positioning Stop 4	0.00–600.00 sec.	0.00
✓	12-33	Delay time of simple positioning stop 5	0.00–600.00 sec.	0.00
✓	12-34	Delay time of simple positioning stop 6	0.00–600.00 sec.	0.00
	12-35	Delay time of simple positioning stop 7	0.00–600.00 sec.	0.00
	12-40	Automatic operation mode	0: Disable operation 1: Execute one program cycle 2: Continuously execute program cycles 3: Execute one program cycle step by step 4: Continuously execute one program cycle step by step	0

	Pr.	Explanation	Settings	Default
			5: Disable automatic operation, but the direction setting at multi-step speed 1 to 7 are effective	
	12-41	PLC program running direction mode	bit 0–bit 7 (0: FWD RUN, 1: REV RUN) bit 0: Direction of auto-operation's main speed bit 1: Direction of the first speed for Pr.04-00 bit 2: Direction of the second speed for Pr.04-01 bit 3: Direction of the second speed for Pr.04-02 bit 4: Direction of the second speed for Pr.04-03 bit 5: Direction of the second speed for Pr.04-04 bit 6: Direction of the second speed for Pr.04-05 bit 7: Direction of the second speed for Pr.04-06	0
	12-42	Main frequency time setting	0–65500 sec.	0
	12-43	1st speed time setting	0–65500 sec.	0
	12-44	2nd speed time setting	0–65500 sec.	0
	12-45	3rd speed time setting	0–65500 sec.	0
	12-46	4th speed time setting	0–65500 sec.	0
	12-47	5th speed time setting	0–65500 sec.	0
	12-48	6th speed time setting	0–65500 sec.	0
	12-49	7th speed time setting	0–65500 sec.	0
↗	12-51	Average PWM signal	1–100 times	1
↗	12-52	PWM signal period	1–2000 ms	1

13 Industry Application Parameters

Pr.	Explanation	Settings	Default
13-00	Application selection	00: Disabled 01: User-defined parameter 03: Fan 04: Pump 05: Conveyor 07: Packing	00
13-01 – 13-50	Application parameters (user-defined)		

14 Protection Parameters (2)

Pr.	Explanation	Settings	Default
14-50	Output frequency at malfunction 2	0.00–599.00 Hz	Read only
14-51	DC bus voltage at malfunction 2	0.0–6553.5 V	Read only
14-52	Output current at malfunction 2	0.00–655.35 Amp	Read only
14-53	IGBT temperature at malfunction 2	-3276.7–3276.7ºC	Read only
14-54	Output frequency at malfunction 3	0.00–599.00 Hz	Read only
14-55	DC bus voltage at malfunction 3	0.0–6553.5 V	Read only
14-56	Output current at malfunction 3	0.00–655.35 Amp	Read only
14-57	IGBT temperature at malfunction 3	-3276.7–3276.7ºC	Read only
14-58	Output frequency at malfunction 4	0.00–599.00 Hz	Read only
14-59	DC bus voltage at malfunction 4	0.0–6553.5 V	Read only
14-60	Output current at malfunction 4	0.00–655.35 Amp	Read only
14-61	IGBT temperature at malfunction 4	-3276.7–3276.7ºC	Read only
14-62	Output frequency at malfunction 5	0.00–599.00 Hz	Read only
14-63	DC bus voltage at malfunction 5	0.0–6553.5 V	Read only
14-64	Output current at malfunction 5	0.00–655.35 Amp	Read only
14-65	IGBT temperature at malfunction 5	-3276.7–3276.7ºC	Read only
14-66	Output frequency at malfunction 6	0.00–599.00 Hz	Read only
14-67	DC bus voltage at malfunction 6	0.0–6553.5 V	Read only
14-68	Output current at malfunction 6	0.00–655.35 Amp	Read only

Pr.	Explanation	Settings	Default
14-69	IGBT temperature at malfunction 6	-3276.7–3276.7ºC	Read only
14-70	Fault record 7	Refer to fault record Pr.06-17–06-22	0
14-71	Fault record 8	Refer to fault record Pr.06-17–06-22	0
14-72	Fault record 9	Refer to fault record Pr.06-17–06-22	0
14-73	Fault record 10	Refer to fault record Pr.06-17–06-22	0

Chapter 12 Description of Parameter Settings

12-1 Description of Parameter Settings

12-2 Adjustment & Application

12-1 Description of Parameter Settings

00 Drive Parameters

You can set this parameter during operation.

00-00 AC motor drive identity code

Default: Read only

Settings Read Only

00-01 AC motor drive rated current display

Default: Read only

Settings Read Only

- Pr.00-00 displays the identity code of the AC motor drive. Use the following specification table to check if Pr.00-01 setting is the rated current of the AC motor drive. Pr.00-01 corresponds to the identity code of the motor.
- The default is the rated current for heavy duty. Set Pr.00-16 to 0 to display the rated current for normal duty.

Models	115V Models: One-Phase				230V Models: One-Phase					
Frame	A		B	C	A/B			B	C	
kW	0.1	0.2	0.4	0.75	0.1	0.2	0.4	0.75	1.5	2.2
HP	0.125	0.25	0.5	1	0.125	0.25	0.5	1	2	3
Identity Code	101	102	103	104	301	302	303	304	305	306
Rated Current for Heavy Duty	0.8	1.6	2.5	4.8	0.8	1.6	2.8	4.8	7.5	11
Rated Current for Normal Duty	1	1.8	2.7	5.5	1	1.8	3.2	5	8.5	12.5

Models	230V Models: Three-Phase										
Frame	A				B	C		D	E		F
kW	0.1	0.2	0.4	0.75	1.5	2.2	3.7 / 4	5.5	7.5	11	15
HP	0.125	0.25	0.5	1	2	3	5	7.5	10	15	20
Identity Code	201	202	203	204	205	206	207	208	209	210	211
Rated Current for Heavy Duty	0.8	1.6	2.8	4.8	7.5	11	17	25	33	49	65
Rated Current for Normal Duty	1	1.8	3.2	5	8	12.5	19.5	27	36	51	69

Models	460V Models: Three-Phase											
Frame	A/B		B	C			D		E		F	
kW	0.4	0.75	1.5	2.2	3	3.7 / 4	5.5	7.5	11	15	18.5	22
HP	0.5	1	2	3	4	5	7.5	10	15	20	25	30
Identity Code	403	404	405	406	482	407	408	409	410	411	412	413
Rated Current for Heavy Duty	1.5	2.7	4.2	5.5	7.3	9	13	17	25	32	38	45
Rated Current for Normal Duty	1.8	3	4.6	6.5	8	10.5	15.7	20.5	28	36	41.5	49

00-02 Parameter Reset

Default: 0

Settings
0: No Function
1: Write protection for parameters
5: Reset kWh displays to 0
8: Keypad does not respond
9: Reset all parameters to defaults (base frequency is 50 Hz)
10: Reset all parameters to defaults (base frequency is 60 Hz)
11: Reset all parameters to defaults (base frequency is 50 Hz) (saves the setting values of user-defined Pr.13-01–Pr.13-50)
12: Reset all parameters to defaults (base frequency is 60 Hz) (saves the setting value of user-defined Pr.13-01–Pr.13-50)

- When set to 1: all parameters are read only except Pr.00-02, 00-07, and 00-08. Set Pr.00-02 to 0 before changing other parameter settings.
- When set to 5: kWh displayed value can be reset to 0 even when the drive is operating. Pr.05-26, 05-27, 05-28, 05-29, 05-30 are reset to 0.
- When set to 8: RUN key on the keypad is invalid; the rest of the keys work normally. Set Pr.00-02 to 0 to unlock parameters setting.
- When set to 9 or 10: reset all parameters to defaults. If there is a password set in Pr.00-08, enter the password set in Pr.00-07 to reset to defaults.
- When set to 9, 10: reboot the motor drive after setting.

00-03 Select Start-up Display

Default: 0

Settings
0: F (frequency command)
1: H (output frequency)
2: U (user-defined) Pr.00-04
3: A (output current)

- This parameter determines the start-up display page. This is the user-defined choice display according to the setting in Pr.00-04.

00-04 Content of Multi-function Display (User-Defined)

Default: 3

Settings
0: Display output current (A) (Unit: Amp)
1: Display counter value (c) (Unit: CNT)
2: Display the drive's actual output frequency (H.) (Unit: Hz)
3: Display the drive's DC bus voltage (v) (Unit: V_{DC})
4: Display the drive's output value (E) (Unit: V_{AC})
5: Display the drive's output power angle (n) (Unit: deg)
6: Display the drive's output power (P) (Unit: kW)
7: Display the motor speed (rpm) (Unit: rpm)
10: Display PID feedback (b) (Unit: %)
11: Display AVI analog input terminal signal (1.) (Unit: %)

12: Display ACI analog input terminal signal (2.) (Unit: %)
14: Display the drive's IGBT temperature (i.) (Unit: oC)
16: The digital input status (ON / OFF) (i)
17: The digital output status (ON / OFF) (o)
18: Display multi-step speed (S)
19: Display corresponding CPU digital input pin status (d)
20: Display corresponding CPU digital output pin status (0.)
25: Overload count (0.00–100.00%) (o.) (Unit: %)
26: Ground fault GFF (G.) (Unit: %)
27: DC bus voltage ripple (r.) (Unit: VDC)
30: Display the output of User-defined (U)
31: Display Pr.00-05 user gain (K)
35: Control mode display:
0 = speed control mode (SPD)
36: Present current operating carrier frequency of the drive (Hz) (J.)
38: Display the drive status (6.)
41: kWH display (J) (Unit: kWh)
42: PID target value (h.) (Unit: %)
43: PID compensation (o.) (Unit: %)
44: PID output frequency (b.) (Unit: Hz)
46: Auxiliary frequency value (U.) (Unit: Hz)
47: Display master frequency value (A) (Unit: Hz)
48: Frequency value after addition and subtraction of master and auxiliary frequency (L.) (Unit: Hz)
60: Display PID setting and feedback signal
61: Display the content of the running program (1 = tt)

Explanation 1

- It can also display negative values when setting analog input bias (Pr.03-03–03-10).
  Example: Assume that AVI input voltage is 0 V, Pr.03-03 is 10.0%, Pr.03-07 is 4 (Bias serves as the center), and Pr.03-10 is 1 allowing negative frequency input.

Explanation 2

Example: If MI1 and MI5 are ON, the following table shows the status of the terminals.
Normally opened contact (N.O.): (0: OFF, 1: ON)

Terminal	MI5	MI4	MI3	MI2	MI1
Status	1	0	0	0	1

- The value is 0000 0000 0001 0001 in binary and 0011H in HEX. When Pr.00-04 is set to "16" or "19", the u page on the keypad displays 0011h.
- The setting 16 is the ON / OFF status of digital input according to Pr.02-12 setting and the setting 19 is the corresponding CPU pin ON / OFF status of the digital input.
- When MI1 / MI2 default setting is two-wire / three-wire operation control (Pr.02-00 ≠ 0), and MI3 is set as three-wire, it is not affected by Pr.02-12.
- You can set 16 to monitor the digital input status, and then set 19 to check if the circuit is normal.

Explanation 3

Example:

Assume that RY: Pr.02-13 is set to 9 (Drive is ready). After the drive powers on, if there is no other abnormal status, the contact is ON. The display status is shown below.

Normally opened contact (N.O.):

Terminal	MO1	RY1
Status	0	1

- If Pr.00-04 is set to 17 or 20, it displays in hexadecimal “0001h” with LED u page is ON in the keypad.
- The setting 17 is the ON / OFF status of digital output according to Pr.02-18 setting and the setting 20 is the corresponding CPU pin ON / OFF status of the digital output.
- You can set 17 to monitor the digital output status, and then set 20 to check if the circuit is normal.

Explanation 4

- Setting value 25: when displayed value reaches 100.00%, the drive shows “oL” as an overload warning.

Explanation 5

- Setting value 38:

  bit 0: The drive is running forward.
  bit 1: The drive is running backward.
  bit 2: The drive is ready.
  bit 3: Errors occurred on the drive.
  bit 4: The drive is running.
  bit 5: Warnings occurred on the drive.

00-05 Coefficient Gain in Actual Output Frequency

Default: 1.00

Settings 0.00–160.00

📖 Sets the user-defined unit coefficient gain. Set Pr.00-04 = 31 to display the calculation result on the screen (calculation = output frequency × Pr.00-05).

00-06 Firmware Version

Default: Read only

Settings Read only

00-07 Parameter Protection Password Input

Default: 0

Settings 0–65535
0–4 (the number of password attempts)

📖 This parameter allows you to enter your password (which is set in Pr.00-08) to unlock the parameter protection and to make changes to the parameter.

📖 To avoid problems in the future, be sure to write down the password after you set this parameter.

📖 Pr.00-07 and Pr.00-08 are used to prevent personnel from setting other parameters by accident. If you forget the password, clear the password setting by entering 9999 and pressing the ENTER key, then enter 9999 again and press ENTER within 10 seconds. After decoding, all the settings return to default.

📖 When setting is under password protection, all the parameters read 0, except Pr.00-08.

00-08 Parameter Protection Password Setting

Default: 0

Settings 0-65535

0: No password protection or password is entered correctly (Pr.00-07)

1: Password has been set

- This parameter is for setting the password protection. Password can be set directly the first time. After you set the password, the value of Pr.00-08 is 1, which means password protection is activated. At this time, if you want to change any of the parameter settings, you must enter the correct password in Pr.00-07 to deactivate the password temporarily, and this would make Pr.00-08 become 0. After you finish setting the parameters, reboot the motor drive and the password is activated again.
- Entering the correct password in Pr.00-07 only temporarily deactivates the password. To permanently deactivate password protection, set Pr.00-08 to 0 manually. Otherwise, password protection is always reactivated after you reboot the motor drive.
- The keypad copy function works only when the password protection is deactivated (temporarily or permanently), and the password set in Pr.00-08 cannot be copied to the keypad. So when copying parameters from the keypad to the motor drive, set the password manually again in the motor drive to activate password protection.

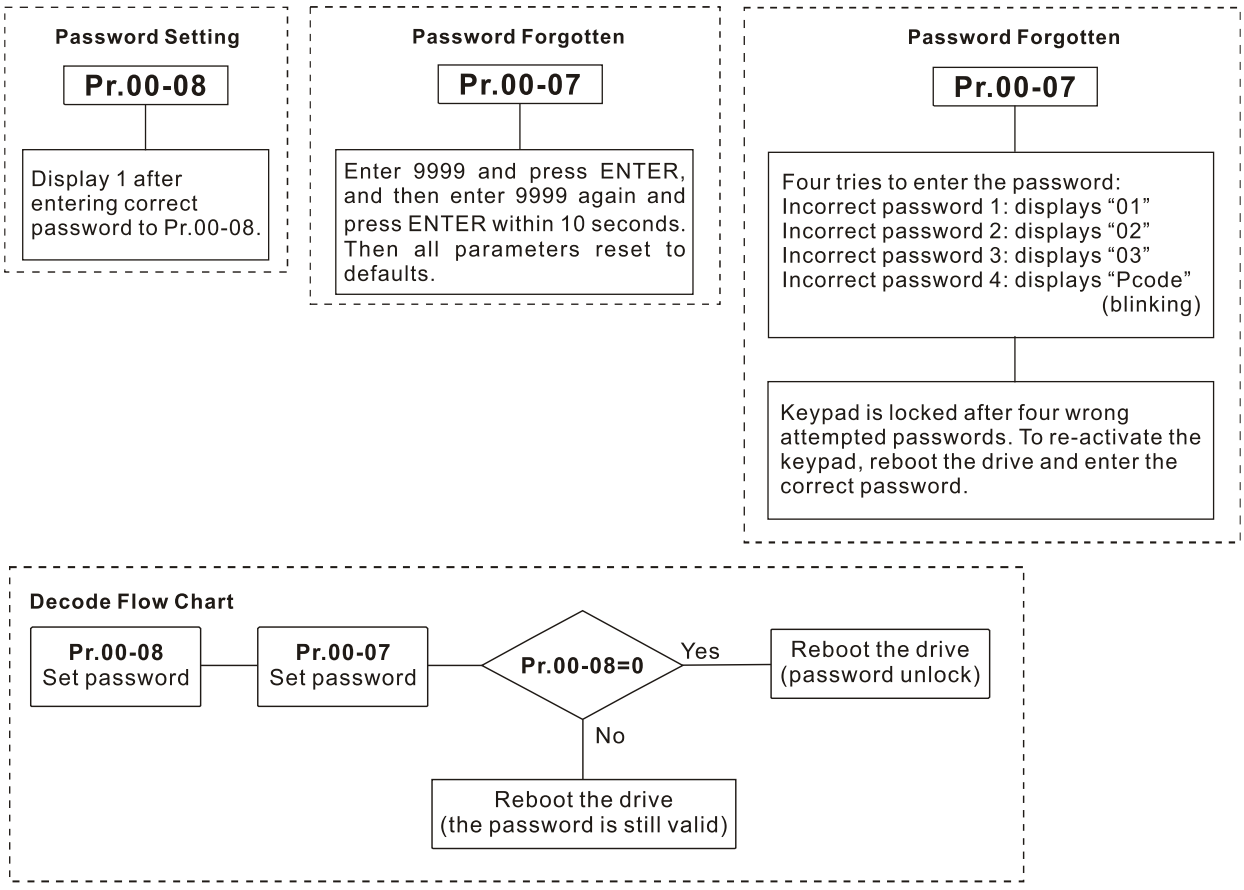

00-10 Control Mode

Default: 0

Settings 0: Speed mode

- Determines the control mode of the AC motor drive.

00-11 Speed Control Mode

Default: 0

Settings 0: IM V/F (IM V/F control)

2: IM / PM SVC (IM / PM space vector control)

📖 Determines the control mode of the AC motor drive:

0: IM V/F control: you can set the proportion of V/F as required and control multiple motors simultaneously.

2: IM sensorless vector control: get the optimal control by auto-tuning the motor parameters.

📖 When Pr.00-10 = 0 and you set Pr.00-11 to 0, the V/F control diagram is as follows:

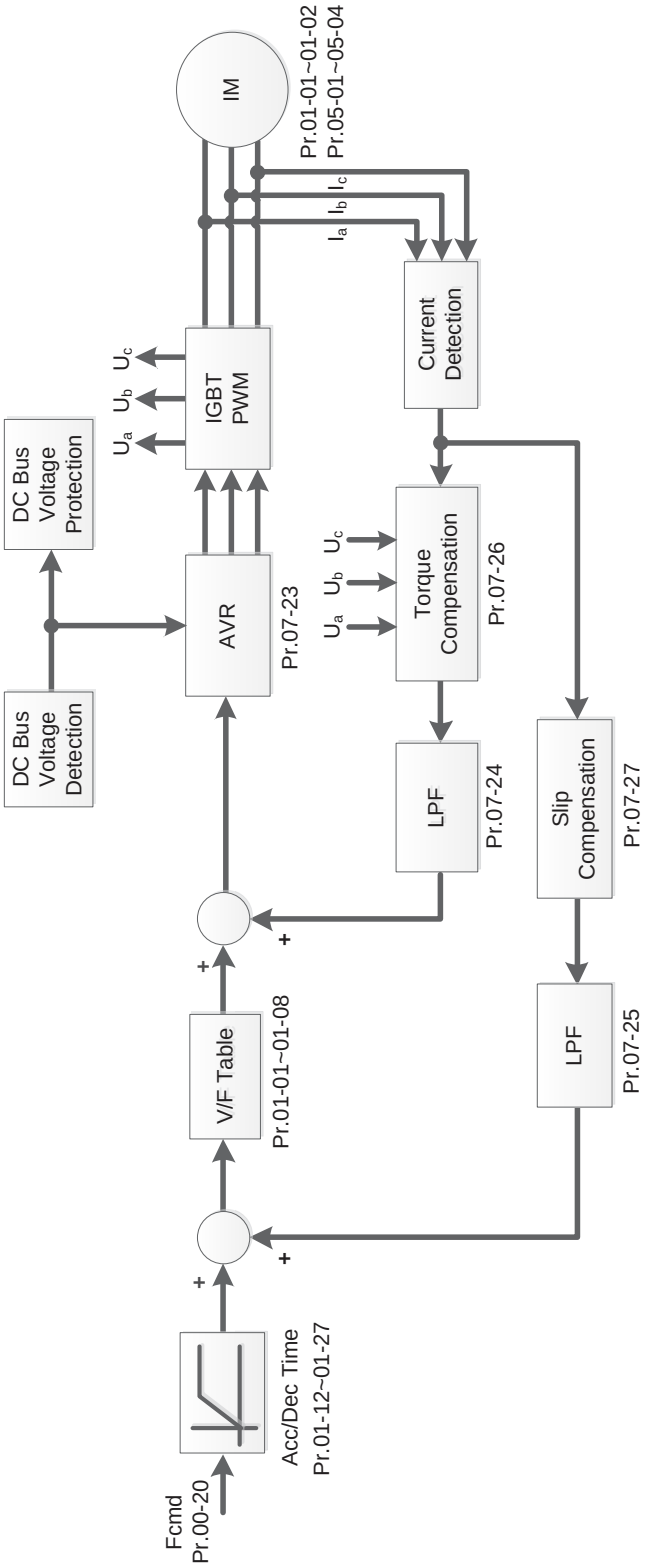

When Pr.00-10 = 0 and you set Pr.00-11 to 2, the sensorless vector control diagram is as follows:

IM Space Vector Control (IM SVC):

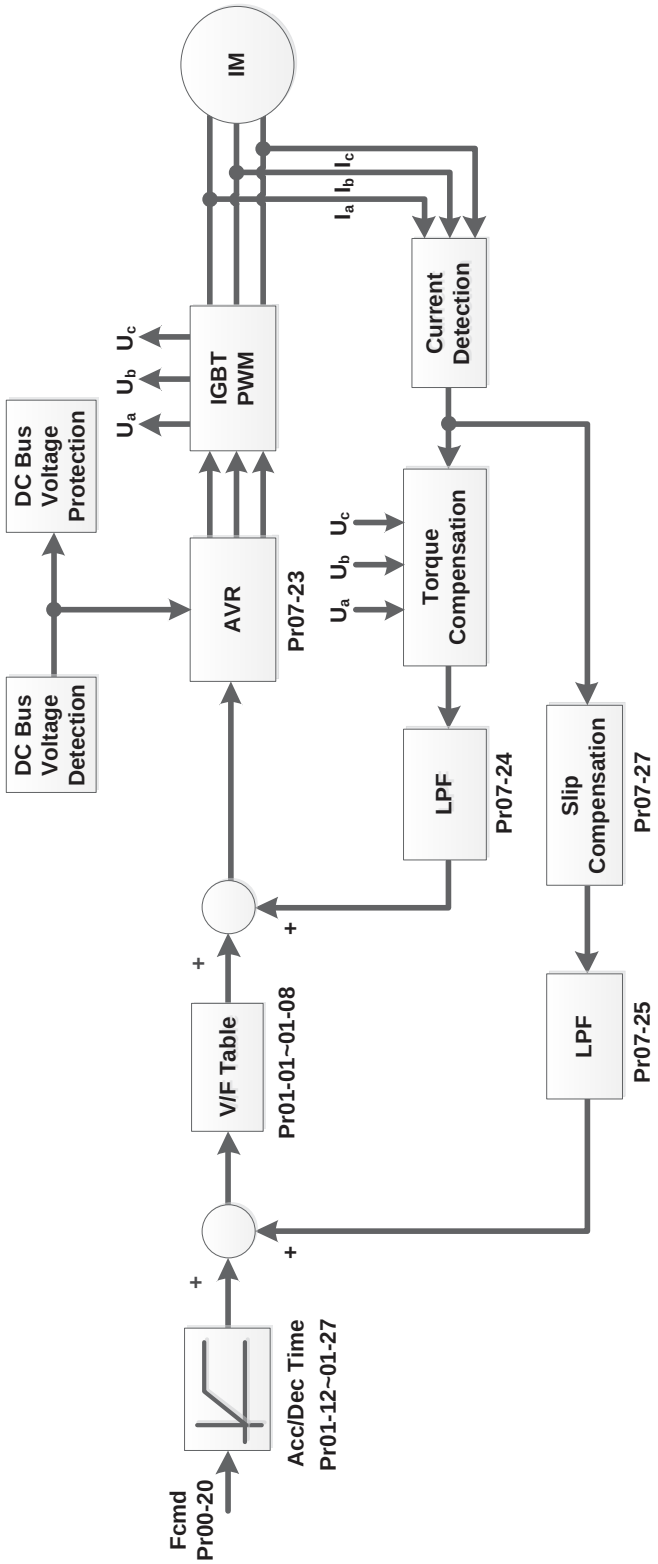

PM Space Vector Control (PM SVC):

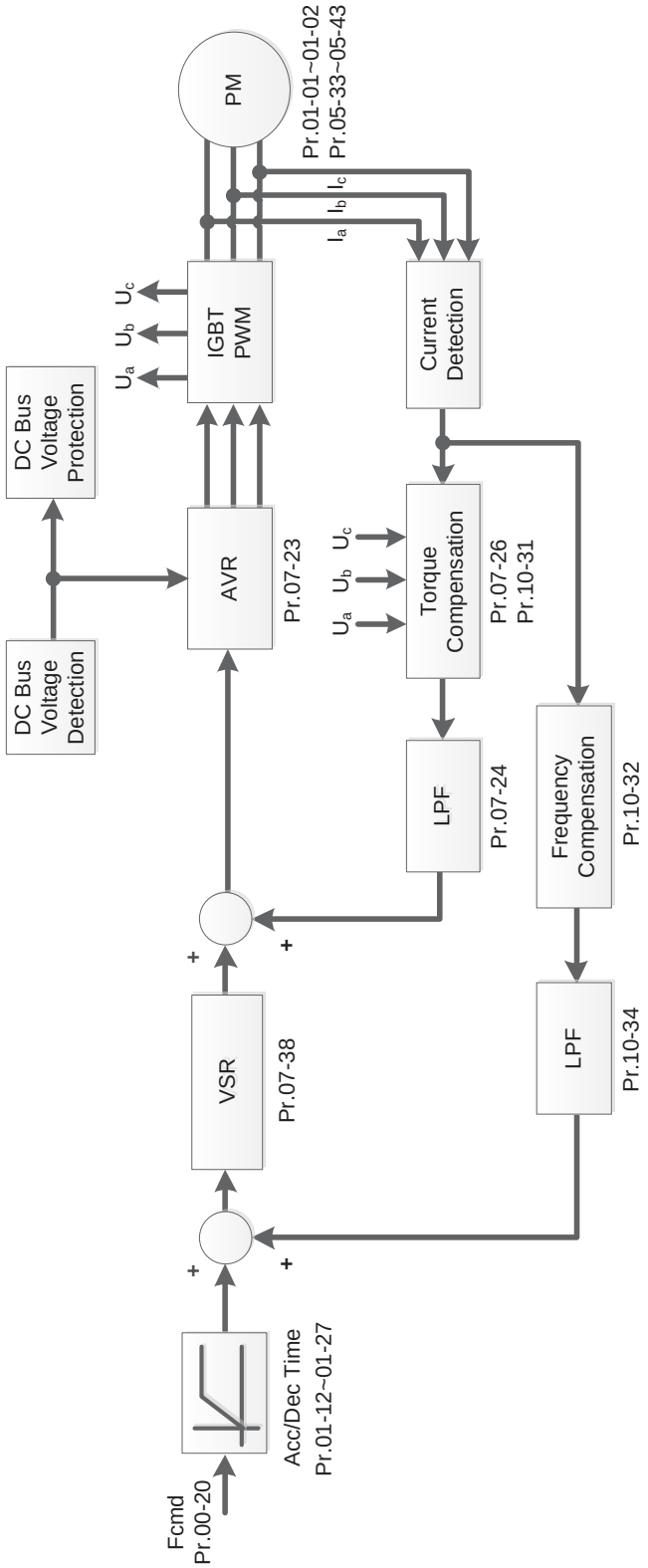

00-16 Load Selection

Default: 1

Settings 0: Normal load

1: Heavy load

📖 Normal duty: over-load rated output current 150% in 3 seconds (120%, 1 minute).

Refer to Pr.00-17 for the setting for the carrier wave. Refer to Chapter 9 Specification or Pr.00-01 for the rated current.

- Heavy duty: over-load rated output current 200% in 3 seconds (150%, 1 minute).
  Refer to Pr.00-17 for the setting for the carrier wave. Refer to Chapter 9 Specification or Pr.00-01 for the rated current.
- Pr.00-01 varies with the setting value for Pr.00-16. The default value and maximum for Pr.06-03 and Pr.06-04 also vary with the setting value of Pr.00-16.
- In Normal Duty, the default setting of Pr.06-03 and Pr.06-04 is 120%, and the maximum is 150%.
- In Heavy Duty, the default setting of Pr.06-03 and Pr.06-04 is 180%, and the maximum is 200%.

00-17 Carrier Frequency

Default: 4

Settings Normal load: 2–15 KHz
Heavy load: 2–15 KHz

- This parameter determines the PWM carrier frequency for the AC motor drive.

Models	230V		460V	
Models	1–15 HP [0.75–11 kW]	20–30 HP [15–22 kW]	1–20 HP [0.75–15 kW]	25–40 HP [18.5–55 kW]
Settings Range	2–15 kHz			
Normal Duty Default	4 kHz			
Heavy Duty Default	4 kHz			

- From the table, you see that the PWM carrier frequency has significant influences on the electromagnetic noise, the AC motor drive heat dissipation, and the motor acoustic noise. Therefore, if the surrounding noise is greater than the motor noise, lower the carrier frequency to reduce the temperature rise. Although the motor has quiet operation in the higher carrier frequency, consider the entire wiring and interference.
- When the carrier frequency is higher than the default, decrease the carrier frequency to protect the drive. Refer to Pr.06-55 for related setting and details.

00-20 Master Frequency Command Source (AUTO, REMOTE)

Default: 0

Settings 0: Digital keypad
1: RS-485 serial communication input
2: External analog input (Refer to Pr.03-00)
3: External UP / DOWN terminal (multi-function input terminals)
4: Pulse input without direction command (Refer to Pr.10-16 without considering direction)
7: Digital keypad potentiometer knob
9: PID controller (With Pr.08-65 = 1)
Note:
HOA (Hand-Off-Auto) function is valid only when you use with MO function setting 42 and 56 or with KPC-CC01 (optional).

- Determines the master frequency source in the “AUTO, REMOTE “mode. The default is AUTO mode.
- You can switch the AUTO, REMOTE mode with the keypad KPC-CC01 (optional) or the multi-function input terminal (MI) to set the master frequency source.

- It returns to AUTO or REMOTE mode whenever you cycle the power. If you use a multi-function input terminal to switch between HAND (LOCAL) and AUTO (REMOTE) mode, the highest priority is the multi-function input terminal.
- The pulse of Pr.00-20 = 4 (Pulse input without direction command) is input by PG or MI5.
- When Pr.00-20 = 9 (PID controller), Pr.08-55 automatically set as 1 at the same time. Pr.08-55 need to be set as 0 for change back to other values.

00-21 Operation Command Source (AUTO, REMOTE)

Default: 0

Settings 0: Digital keypad
1: External terminals
2: Communication RS-485 input
Note:
HOA (Hand-Off-Auto) function is valid only when you use with MO function setting 42 and 56 or with KPC-CC01 (optional).

- Determines the operation frequency source in “AUTO, REMOTE” mode.
- In the HOA mode, if the multi-function input terminal (MI) function setting 41 and 42 are OFF, the drive does not receive any operation command and JOG is invalid.

00-22 Stop Method

Default: 0

Settings 0: Ramp to stop
1: Coast to stop
2: Motor stops by simple positioning

- Determines how the motor is stopped when the drive receives the Stop command.

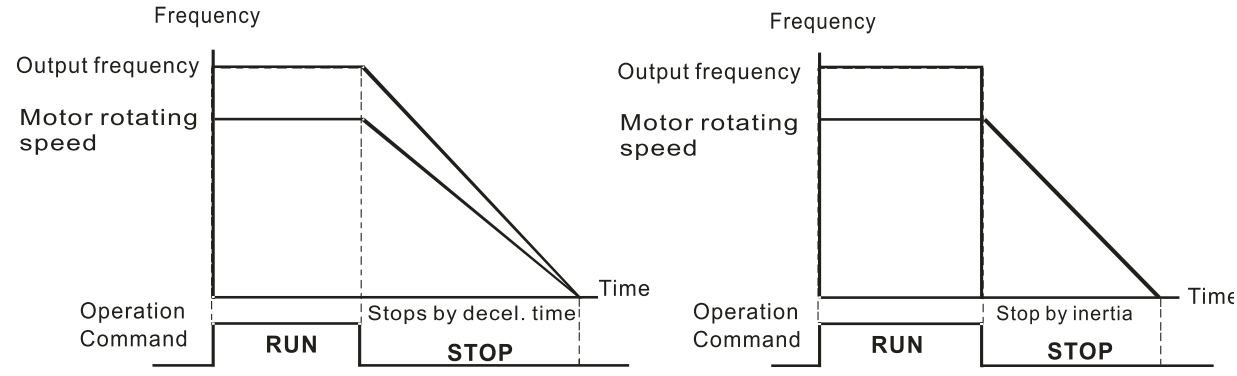

Ramp to Stop and Coast to Stop

1. **Ramp to stop:** the AC motor drive decelerates to 0 or the minimum output frequency (Pr.01-09) according to the set deceleration time, and then to stop (according to Pr.01-07).
2. **Coast to stop:** the AC motor drive stops output immediately, and the motor coasts to stop according to the load inertia.

☑ Use “ramp to stop” for the safety of personnel, or to prevent material from being wasted in applications where the motor must stop immediately after the drive stops. You must set the deceleration time accordingly.

☑ If idling is allowed, or the load inertia is large, use “coast to stop”. For example, blowers, punching machines and pumps.

3. **Motor stops by simple positioning:** use with the functions for Pr.12-20–12-35.

00-23 Motor direction control

Default: 0

Settings 0: Enable forward / reverse
1: Disable reverse
2: Disable forward

🕮 Enables the motor to run in the forward and reverse direction. You can use it to prevent a motor from running in a direction that would cause injury or damage to the equipment, especially when only one running direction is allowed for the motor load.

00-24 Digital operator (keypad) frequency command memory

Default: Read Only

Settings Read only

🕮 If the keypad is the frequency command source, when Lv or Fault occurs, this parameter stores the current frequency command.

00-25 User-Defined Characteristics

Default: 0

Settings bit 0–3: user-defined decimal places
0000b–0000b: no decimal place
0001b–0001b: one decimal place
0010b–0010b: two decimal places
0011b–0011b: three decimal places
bit 4–15: user-defined unit
000xh: Hz
001xh: rpm
002xh: %
003xh: kg
004xh: m/s
005xh: kW
006xh: HP
007xh: ppm
008xh: 1/m
009xh: kg/s
00Axh: kg/m
00Bxh: kg/h
00Cxh: lb/s
00Dxh: lb/m
00Exh: lb/h
00Fxh: ft/s

010xh: ft/m
011xh: m
012xh: ft
013xh: degC
014xh: degF
015xh: mbar
016xh: bar
017xh: Pa
018xh: kPa
019xh: mWG
01Axh: inWG
01Bxh: ftWG
01Cxh: psi
01Dxh: atm
01Exh: L/s
01Fxh: L/m
020xh: L/h
021xh: m3/s
022xh: m3/h
023xh: GPM
024xh: CFM
xxxxh: Hz

- bit 0–3:
  The displayed units for the control frequency F page and user-defined (Pr.00-04 = d10, PID feedback), and the displayed number of decimal places for Pr.00-26 (support up to three decimal places).
- bit 4–15:
  The displayed units for the control frequency F page, user-defined (Pr.00-04 = d10, PID feedback) and Pr.00-26.

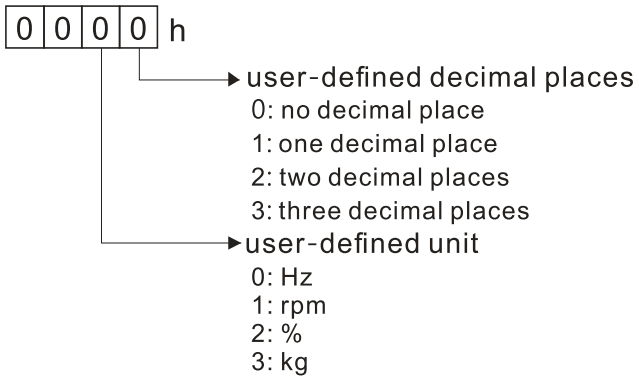

- You must convert the setting value to decimal when using the keypad to set parameters.
  Example: Assume that the user-defined unit is inWG and user-defined decimal place is the third decimal point.
  According to the information above, the corresponding unit to inWG is 01Axh (x is the set decimal

point), and the corresponding unit to the third decimal place is 0003h, then inWG and the third decimal point displayed in hexadecimal is 01A3h, that is 419 in decimal value. Thus, set Pr.00-25 = 419 to complete the setting.

00-26 Maximum User-Defined Value

Default: 0

Settings 0: Disable
0–65535 (when Pr.00-25 set to no decimal place)
0.0–6553.5 (when Pr.00-25 set to one decimal place)
0.00–655.35 (when Pr.00-25 set to two decimal places)
0.000–65.535 (when Pr.00-25 set to three decimal places)

When Pr.00-26 is NOT set to 0, the user-defined value is enabled. After selecting the displayed unit and number of decimal points with Pr.00-25, the setting value of Pr.00-26 corresponds to Pr.01-00 (Maximum motor operating frequency), and then the motor operation frequency has a linear relationship with the displayed value on the digital keypad.

Example:

When the frequency set in Pr.01-00 = 60.00 Hz, the maximum user-defined value for Pr.00-26 is 100.0%. This also means that Pr.00-25 is set at 33 (0021h) to select % as the unit.

NOTE:

Set Pr.00-25 before using Pr.00-26. After you finish setting, when Pr.00-26 is not 0, the displayed unit on the keypad shows correctly according to Pr.00-25 settings.

00-27 User-Defined Value

Default: Read only

Settings Read only

Pr.00-27 displays the user-defined value when Pr.00-26 is not set to 0.

The user-defined value is valid only when Pr.00-20 (frequency source) is set to the digital keypad or to RS-485 communication.

00-29 LOCAL / REMOTE Mode

Default: 0

Settings 0: Standard HOA function
1: Switch Local / Remote, the drive stops
2: Switch Local / Remote, the drive runs as the REMOTE setting for frequency and operation status
3: Switch Local / Remote, the drive runs as the LOCAL setting for frequency and operation status
4: Switch Local / Remote, the drive runs as LOCAL setting when switched to Local and runs as REMOTE setting when switched to Remote for frequency and operating status.

The default for Pr.00-29 is 0, that is, the standard HOA (Hand-Off-Auto) function. Set the AUTO and HAND frequency and operation source with Pr.00-20, 00-21 and Pr.00-30, 00-31. The external terminal function (MI) = 56 for LOC / REM mode selection is disabled when Pr.00-29=0.

- If Pr.00-29 is not set to 0, the top right corner of digital keypad KPC-CC01 (optional) displays LOC or REM. Set the REMOTE and LOCAL frequency and operation source with Pr.00-20, 00-21 and Pr.00-30, 00-31. Set the multi-function input terminal (MI) = 56 to set the LOC / REM selection. The AUTO key on the KPC-CC01 (optional) is the REMOTE function; the HAND key is the LOCAL function.
- If Pr.00-29 is not set to 0, the AUTO / HAND keys are disabled. In this case, the external terminal (MI) setting = 56 (local / remote selection) has the highest command priority.

00-30 Master Frequency Command Source (HAND, LOCAL)

Default: 0

Settings
0: Digital keypad
1: RS-485 communication input
2: External analog input (Refer to Pr.03-00)
3: External UP / DOWN terminal (multi-function input terminals)
7: Digital keypad potentiometer knob
9: PID controller
Note:
HOA (Hand-Off-Auto) function is valid only when you use with MO function setting 41 and 56 or with KPC-CC01 (optional).

- Determines the master frequency source in the "HAND, LOCAL" mode.
- You can switch the HAND, LOCAL mode with the keypad KPC-CC01 (optional) or the multi-function input terminal (MI) to set the master frequency source.
- It returns to AUTO or REMOTE mode whenever you cycle the power. If you use a multi-function input terminal to switch between HAND (LOCAL) and AUTO (REMOTE) mode, the highest priority is the multi-function input terminal.
- The pulse of Pr.00-20 = 4 (Pulse input without direction command) is input by PG or MI5.

00-31 Operation Command Source (HAND, LOCAL)

Default: 0

Settings
0: Digital keypad
1: External terminals
2: RS-485 communication input

- Determines the operation frequency source in the "HAND, LOCAL" mode.
- In the HOA mode, if the multi-function input terminal (MI) function setting 41 and 42 are OFF, the drive does not receive any operation command and JOG is invalid.

00-32 Digital Keypad STOP Function

Default: 0

Settings
0: STOP key disable
1: STOP key enable

- This parameter is valid when the digital keypad is not set as the operation source (Pr.00-21 ≠ 0). When Pr.00-21 = 0, the STOP key on the digital keypad is not affected by this parameter.

00-33 RPWM Mode Selection

Default: 0

Settings 0: Disabled
1: RPWM mode 1
2: RPWM mode 2
3: RPWM mode 3

🕮 Different control modes for Pr.00-33:

Motor	Induction Motor (IM)		Permanent Magnet Synchronous Motor (PM)
Control Mode	VF	SVC	SVC
0: RPWM mode 1	✓	✓	✓
1: RPWM mode 2	✓	✓	✓
2: RPWM mode 3	✓	✓	✓

🕮 When the RPWM function is enabled, the drive randomly distributes the carrier frequency based on actual Pr.00-17 carrier frequency settings.

🕮 The RPWM function can be applied to all control modes.

🕮 Once the RPWM function is enabled, particularly high frequency audio noise is reduced, and the audio frequency produced by the running motor also changes (usually from a higher to lower).

🕮 Three RPWM modes are provided for different applications. Each mode corresponds to different frequency distribution, electromagnetic noise distribution, and audio frequency.

🕮 The settings for Pr.00-17 (Carrier Frequency) vary with enabling or disabling RPWM.

00-34 RPWM Range

Default: 0.0

Settings 0.0–4.0 kHz
Pr.00-17 = 4 kHz, 8 kHz: the setting range is 0.0–2.0 kHz
Pr.00-17 = 5–7 kHz: the setting range is 0.0–4.0 kHz

🕮 When the RPWM function is enabled, the minimum carrier frequency setting for Pr.00-17 is 3 kHz, and the maximum is 9 kHz.

🕮 Pr.00-34 is valid only when the RPWM function is enabled (Pr.00-33 ≠ 0).

🕮 When the RPWM function is enabled and Pr.00-17 is set to 4 or 8 kHz, the setting range for Pr.00-34 is 0.0–2.0 kHz (± 1 kHz).

🕮 Example:
When Pr.00-17 = 4 kHz, Pr.00-33 is enabled (= 1, 2, or 3), Pr.00-34 = 2.0 kHz, then the carrier frequency outputs on the basis of 4 kHz, and the random frequency distribution tolerance is ± 1 kHz, that is, the carrier frequency randomly fluctuates from 3 kHz to 5 kHz.

🕮 When Pr.00-17 = 4 or 8 kHz, the maximum setting for Pr.00-34 is 2.0 kHz (± 1 kHz). The carrier frequency fluctuation range is according to the diagram below.

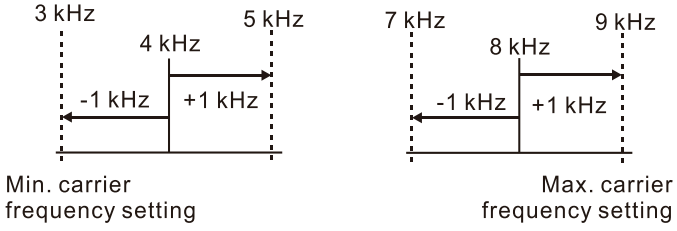

When Pr.00-17 = 5, 6, or 7 kHz, the maximum setting for Pr.00-34 is 4.0 kHz (± 2 kHz). The carrier frequency fluctuation range is according to the diagram below.

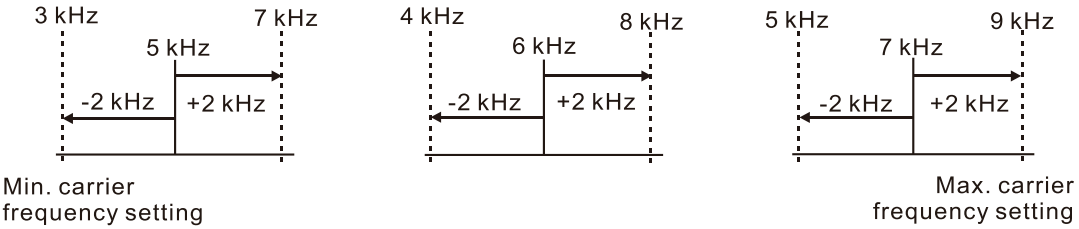

00-35 Auxiliary Frequency Source

Default: 0

Settings
0: Master and auxiliary frequency function disabled
1: Digital keypad
2: Communication RS-485 input
3: Analog input
4: External UP / DOWN key input (multi-function input terminals)
7: Digital keypad potentiometer knob

00-36 Master and auxiliary frequency command selection

Default: 0

Settings
0: Master + auxiliary frequency
1: Master - auxiliary frequency
2: Auxiliary - master frequency

Master and auxiliary frequency command sets the master frequency source according to Pr.00-20, and sets the auxiliary frequency source according to Pr.00-35. Addition and subtraction mode of auxiliary / master frequency is set according to Pr.00-36.

When Pr.00-36 = 0, 1, 2, acceleration and deceleration by the system (includes S-curve) after adding or subtracting the auxiliary / master frequency, can then be output as a control command.

If the value received is negative after adding or subtracting the auxiliary / master frequency, then Pr.03-10 determines whether to change the running direction.

If you set the master frequency source (Pr.00-20 = 0) or the auxiliary frequency source (Pr.00-35 = 1) using the keypad, then the F page of the keypad displays the setting frequency that you can use to set the master frequency or the auxiliary frequency. If the master frequency source or the auxiliary frequency source is NOT set by keypad (Pr.00-20 ≠ 0 and Pr.00-35 ≠ 1), the F page of the keypad displays the value after adding or subtracting the auxiliary / master frequency.

When setting the master frequency source and auxiliary frequency source, Pr.00-35 cannot be set to the same value as Pr.00-20 or Pr.00-30.

00-48 Display Filter Time (Current)

Default: 0.100

Settings 0.001–65.535 sec.

Minimizes the current fluctuation displayed by digital keypad.

00-49 Display Filter Time (Keypad)

Default: 0.100

Settings 0.001–65.535 sec.

📖 Minimizes the value fluctuation displayed by digital keypad.

00-50 Software Version (Date)

Default: Read only

Settings Read only

📖 Displays the current drive software version by date.

01 Basic Parameters

✓ You can set this parameter during operation.

01-00 Motor 1 Maximum Operation Frequency
01-52 Motor 2 Maximum Operation Frequency of

Default: 60.00 / 50.00

Settings 00.00–599.00 Hz

📖 Determines the drive's maximum operation frequency range.
This setting corresponds to the maximum value for the analog input frequency setting signal (0–10 V, 4–20 mA, 0–20 mA, ±10 V).

01-01 Motor 1 Rated / Base Output Frequency
01-35 Motor 2 Rated / Base Output Frequency

Default: 60.00 / 50.00

Settings 00.00–599.00 Hz

📖 Set this value according to the motor's rated frequency from the motor's nameplate.
If the motor's rated frequency is 60 Hz, set the value to 60 Hz. If the motor's rated frequency is 50 Hz, set the value to 50 Hz.

01-02 Motor 1 Rated / Base Output Voltage
01-36 Motor 2 Rated / Base Output Voltage

Default: 220.0 / 440.0

Settings 115V / 230V models: 0.0–255.0 V
460V models: 0.0–510.0 V

📖 Set this value according to the rated voltage of the motor from the motor's nameplate. If the motor's rated voltage is 220 V, set the value to 220.0 V. If the motor's rated voltage is 200 V, set the value to 200.0 V.

📖 There are a wide variety of motors, but the power system for each country is different. The convenient and economical way to solve this problem is to use an AC motor drive, which can deal with different voltages and frequencies, while supporting the original characteristics and life of the motor.

01-03 Motor 1 Mid-point Frequency 1

Default: 3.00

Settings 0.00–599.00 Hz

✓ **01-04** Motor 1 Mid-point Voltage 1

Default: 11.0 / 22.0

Settings 115V / 230V models: 0.0–240.0 V
460V models: 0.0–480.0 V

01-37 Motor 2 Mid-point Frequency 1

Default: 3.00

Settings 0.00–599.00 Hz

01-38 Motor 2 Mid-point Voltage 1

Default: 11.0 / 22.0

Settings 115V / 230V models: 0.0–240.0 V
460V models: 0.0–480.0 V

01-05 Motor 1 Mid-point Frequency 2

Default: 1.5

Settings 0.00–599.00 Hz

01-06 Motor 1 Mid-point Voltage 2

Default: 5.0 / 10.0

Settings 115V / 230V models: 0.0–240.0 V
460V models: 0.0–480.0 V

01-39 Motor 2 Mid-point Frequency 2

Default: 0.50

Settings 0.00–599.00 Hz

01-40 Motor 2 Mid-point Voltage 2

Default: 2.0 / 4.0

Settings 115V / 230V models: 0.0–240.0 V
460V models: 0.0–480.0 V

01-07 Motor 1 Minimum Output Frequency

Default: 0.50

Settings 0.00–599.00 Hz

01-08 Motor 1 Minimum Output Voltage

Default: 1.0 / 2.0

Settings 115V / 230V models: 0.0–240.0 V
460V models: 0.0–480.0 V

01-41 Motor 2 Minimum Output Frequency

Default: 0.00

Settings 0.00–599.00 Hz

01-42 Motor 2 Minimum Output Voltage

Default: 0.0 / 0.0

Settings 115V / 230V models: 0.0–240.0 V
460V models: 0.0–480.0 V

- The V/F curve setting is usually set by the motor's allowable loading characteristics. If the loading characteristics exceeds the loading limit of the motor, you must pay more attention to the heat dissipation, dynamic balance, and bearing lubrication of the motor.
- If the voltage is too high when the motor is at low frequencies, it may cause motor damage, overheating, and may trigger stalling or over-current protection. To prevent motor damage or motor fault, be careful when you set the voltage.
- The diagram below shows the V/F curve for motor 1. You can also find the V/F curve for motor 2 from the same diagram. For multi-motors selection, refer to multi-function input terminal settings 83 for Pr.02-01–02-05.

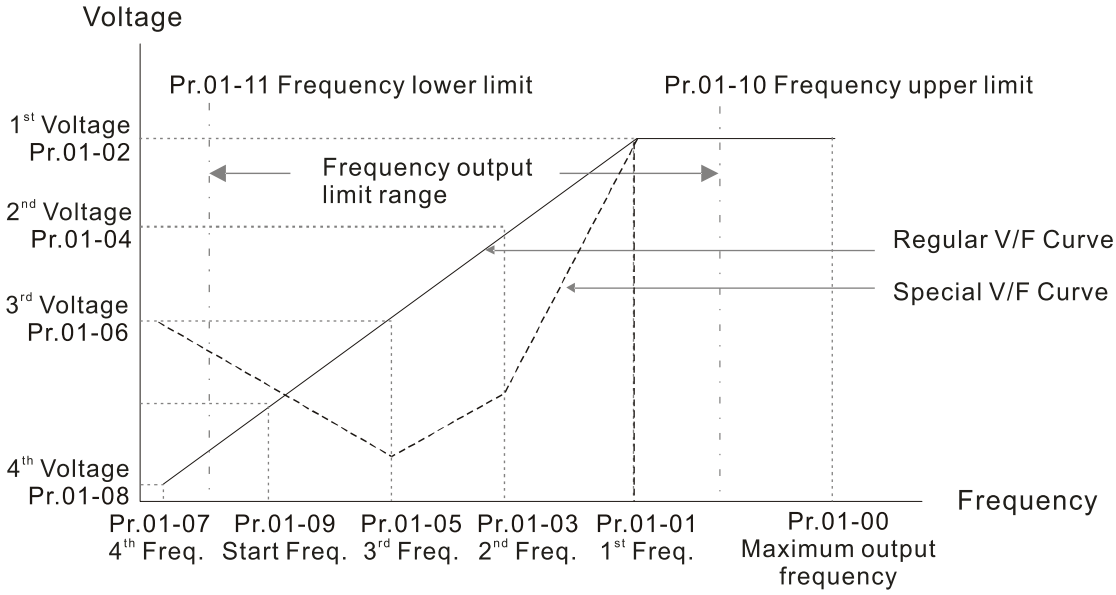

V/F Curve

Common settings for the V/F curve:

(1) General purpose

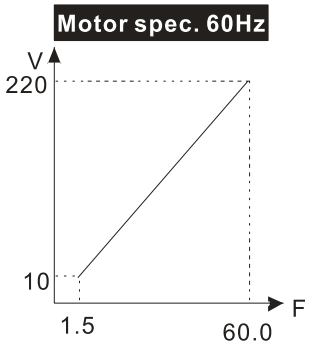

Pr.	Setting
01-00	60.0
01-01	60.0
01-02	220.0
01-03 01-05	1.50
01-04 01-06	10.0
01-07	1.50
01-08	10.0

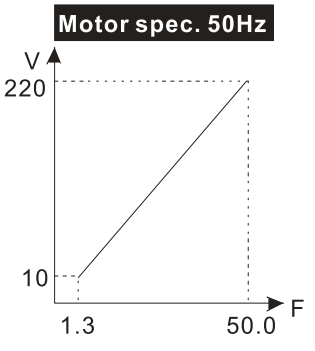

Pr.	Setting
01-00	50.0
01-01	50.0
01-02	220.0
01-03 01-05	1.30
01-04 01-06	10.0
01-07	1.30
01-08	10.0

(2) For fan and hydraulic machinery

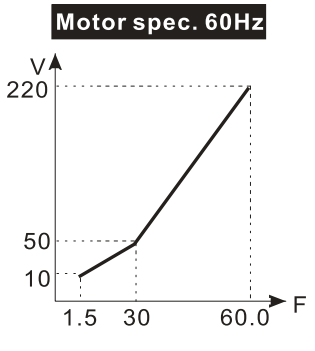

Pr.	Setting
01-00	60.0
01-01	60.0
01-02	220.0
01-03 01-05	30.0
01-04 01-06	50.0
01-07	1.50
01-08	10.0

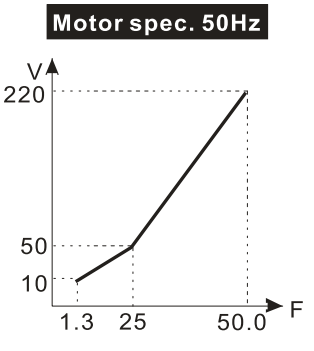

Pr.	Setting
01-00	50.0
01-01	50.0
01-02	220.0
01-03 01-05	25.0
01-04 01-06	50.0
01-07	1.30
01-08	10.0

(3) High starting torque

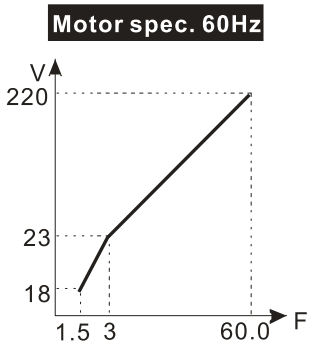

Pr.	Setting
01-00	60.0
01-01	60.0
01-02	220.0
01-03 01-05	3.00
01-04 01-06	23.0
01-07	1.50
01-08	18.0

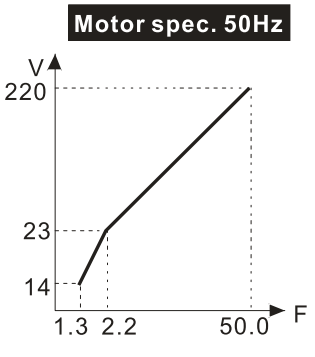

Pr.	Setting
01-00	50.0
01-01	50.0
01-02	220.0
01-03 01-05	2.20
01-04 01-06	23.0
01-07	1.30
01-08	14.0

01-09 Start-up Frequency

Default: 0.50

Settings 0.00–599.00 Hz

When the starting frequency is higher than the minimum output frequency, the drive's output is from the starting frequency to the setting frequency. Refer to the following diagram for details.

Fcmd = frequency command;

Fstart = start frequency (Pr.01-09);

fstart = actual start frequency of drive;

Fmin = 4th output frequency setting (Pr.01-07 / Pr.01-41);

Flow = output frequency lower limit (Pr.01-11)

When Fcmd > Fmin and Fcmd < Fstart:

If Flow < Fcmd, drive runs directly by Fcmd.

If Flow ≥ Fcmd, drive runs by Fcmd, then rises to Flow according to acceleration time.

The output frequency goes directly to 0 when decelerating to Fmin.

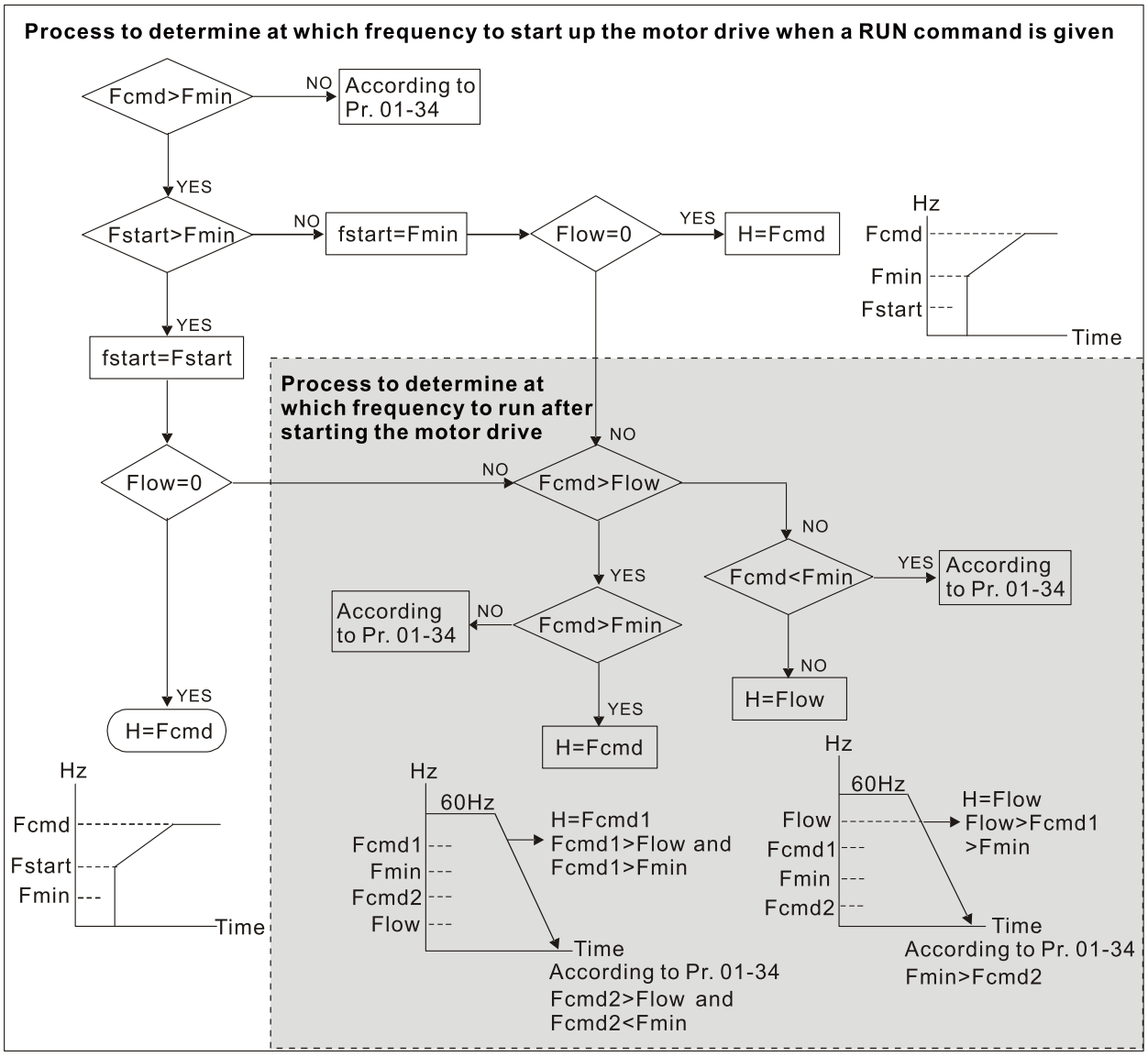

01-10 Output Frequency Upper Limit

Default: 599.00

Settings 0.00–599.00 Hz

01-11 Output Frequency Lower Limit

Default: 0.00

Settings 0.00–599.00 Hz

- If the frequency setting is higher than the upper limit (Pr.01-10), the drive uses the upper limit frequency. If the output frequency is lower than lower limit (Pr.01-11) and frequency setting is higher than minimum frequency (Pr.01-07), the drive uses the lower limit frequency. Set the upper limit frequency > lower limit frequency (Pr.01-10 setting value must be > Pr.01-11 setting value).
- If the PID control is enabled for the drive, the drive's output frequency may exceed frequency command but is still limited by this setting.
- Related parameters: Pr.01-00 Maximum Operation Frequency.

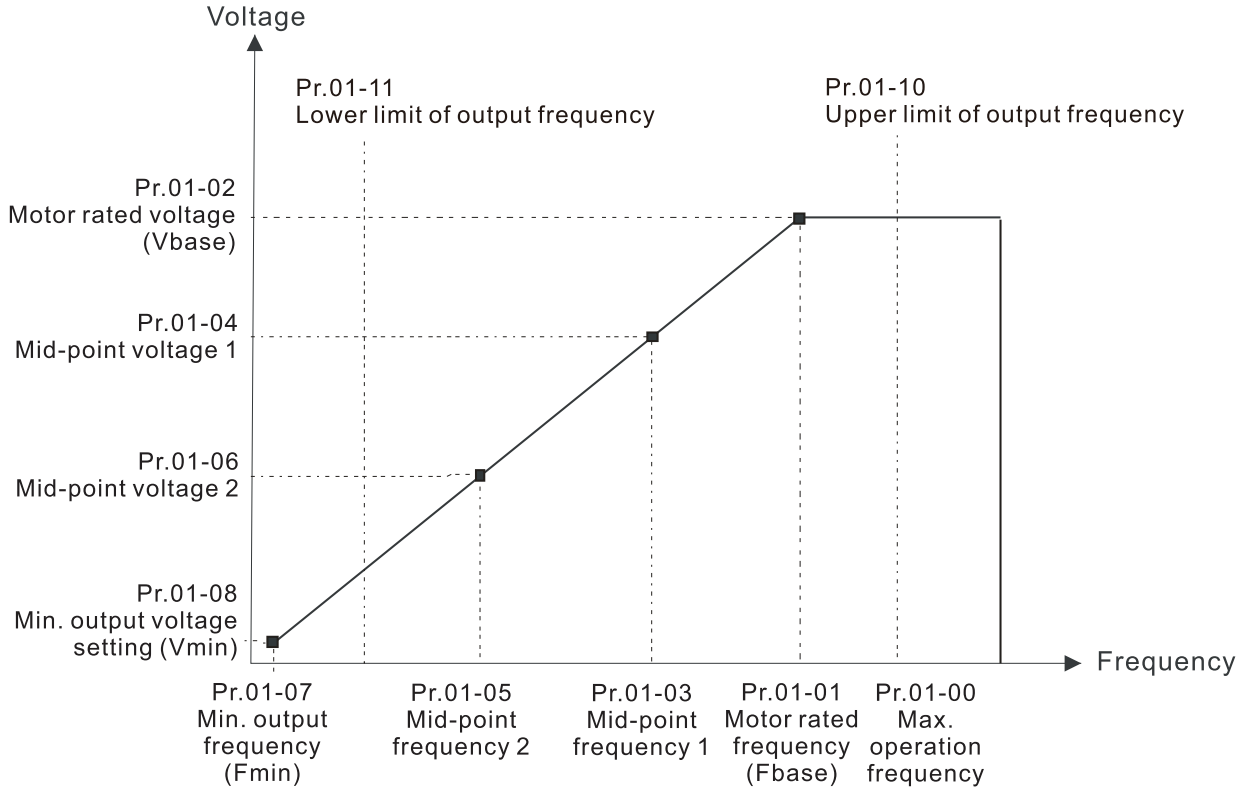

- When the drive starts, it operates from the minimum output frequency (Pr.01-07) and accelerates to the setting frequency. It is not limited by the lower output frequency settings.
- Use the frequency upper and lower limit settings to prevent operator misuse, overheating caused by operating at a too low frequency, or damage caused by excessive speed.
- If the frequency upper limit setting is 50 Hz and the frequency setting is 60 Hz, the operating frequency is 50 Hz.
- If the frequency lower limit setting is 10 Hz and the minimum operation frequency setting (Pr.01-07) is 1.5 Hz, the drive operates at 10 Hz when the frequency command is greater than Pr.01-07 and less than 10 Hz. If the frequency command is less than Pr.01-07, the drive stays in ready status with no output.

01-12	Acceleration Time 1
01-13	Deceleration Time 1
01-14	Acceleration Time 2
01-15	Deceleration Time 2
01-16	Acceleration Time 3
01-17	Deceleration Time 3
01-18	Acceleration Time 4
01-19	Deceleration Time 4
01-20	JOG Acceleration Time
01-21	JOG Deceleration Time

Default: 10.00

Settings Pr.01-45 = 0: 0.00–600.00 sec.
Pr.01-45 = 1: 0.0–6000.0 sec.

- Use the acceleration time to determine the time required for the AC motor drive to accelerate from 0 Hz to maximum output frequency (Pr.01-00).
- The acceleration and deceleration time are invalid when using Pr.01-44 Auto-acceleration and Auto-deceleration Setting.
- Select the acceleration and deceleration time 1, 2, 3, and 4 with the multi-function input terminals settings. The defaults are acceleration and deceleration time 1. With the enabled torque limits and stall prevention functions, the actual acceleration and deceleration time are longer than the above action time.
- Note that setting the acceleration and deceleration time too short may trigger the protection function (Pr.06-03 Over-current Stall Prevention during Acceleration or Pr.06-01 Over-voltage Stall Prevention).
- Note that setting the acceleration time too short may cause motor damage or trigger drive protection due to over-current during acceleration.
- Note that setting the deceleration time too short may cause motor damage or trigger drive protection due to over-current during deceleration or over-voltage.
- Use suitable brake resistors (refer to Chapter 07 Optional Accessories) to decelerate in a short time and prevent over-voltage.
- When you enable Pr.01-24–Pr.01-27 (S-curve acceleration and deceleration begin and arrival time), the actual acceleration and deceleration time are longer than the setting.

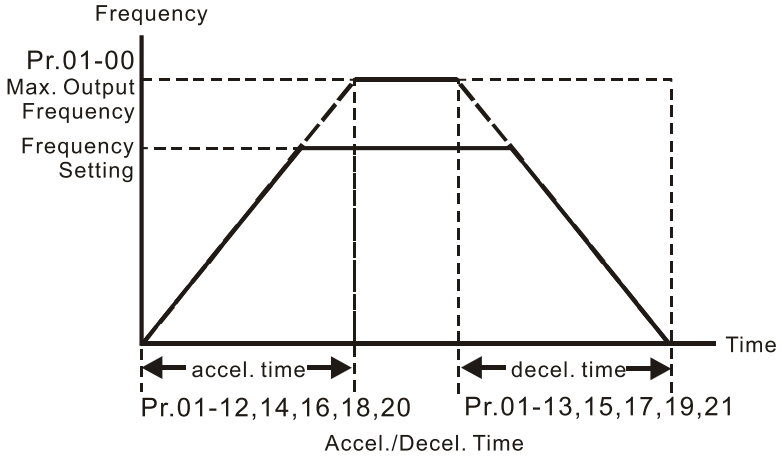

01-22 JOG Frequency

Default: 6.00

Settings 0.00–599.00 Hz

You can use both the external terminal JOG and F1 key on the optional keypad KPC-CC01 to set the JOG function. When the JOG command is ON, the AC motor drive accelerates from 0 Hz to the JOG frequency (Pr.01-22). When the JOG command is OFF, the AC motor drive decelerates from the JOG frequency to stop. The JOG acceleration and deceleration time (Pr.01-20, Pr.01-21) are the time to accelerate from 0.0 Hz to the JOG frequency (Pr.01-22). You cannot execute the JOG command when the AC motor drive is running. When the JOG command is executing, other operation commands are invalid.

01-23 Switch frequency between first and fourth acceleration / deceleration

Default: 0.00

Settings 0.00–599.00 Hz

This function does not require the external terminal switching function; it switches the acceleration and deceleration time automatically by the Pr.01-23 setting. If you set the external terminal, it is based on the external terminal first, and not on Pr.01-23.

Use this parameter to set the switch frequency between acceleration and deceleration slope. The First / Fourth Accel. / Decel. slope is calculated by the Max. Operation Frequency (Pr.01-00) / acceleration / deceleration time.

Example: When the Max. Operation Frequency (Pr.01-00) = 80 Hz, and Switch Frequency between First and Fourth Accel. / Decel. (Pr.01-23) = 40 Hz:

a. If Acceleration Time 1 (Pr.01-02) = 10 sec., Acceleration Time 4 (Pr.01-18) = 6 sec., then the acceleration time is 3 sec. for 0–40 Hz and 5 sec. for 40–80 Hz.
b. If Deceleration Time 1 (Pr.01-13) = 8 sec., Deceleration Time 4 (Pr.01-19) = 2 sec., then the deceleration time is 4 sec. for 80–40 Hz and 1 sec. for 40–0 Hz.

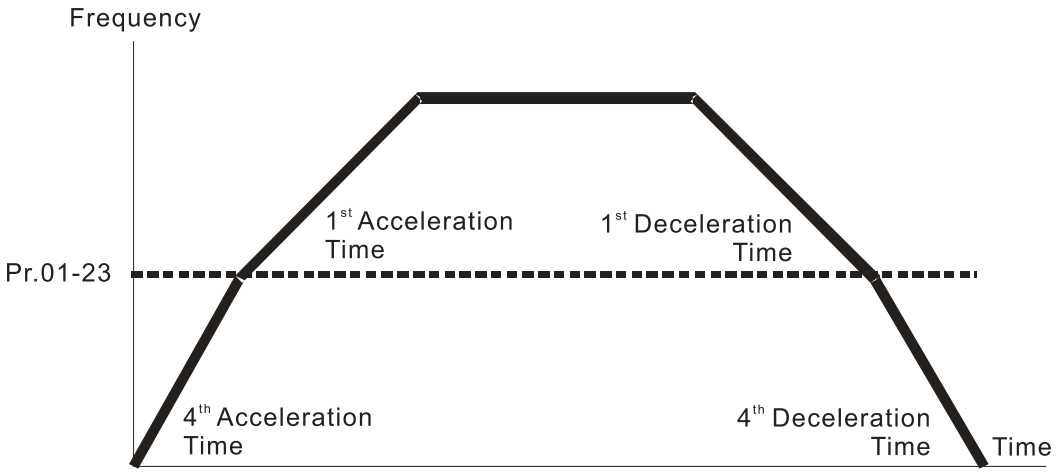

1st/4th Acceleration/Deceleration Frequency Switching

01-24	S-curve for Acceleration Begin Time 1
01-25	S-curve for Acceleration Arrival Time 2
01-26	S-curve for Deceleration Begin Time 1
01-27	S-curve for Deceleration Arrival Time 2

Default: 0.20

Settings Pr.01-45 = 0: 0.00–25.00 sec.
Pr.01-45 = 1: 0.0–250.0 sec.

- Sets a slow start when the drive begins to accelerate at the start. The acceleration and deceleration curve adjust the S-curve acceleration and deceleration according to the parameter value. When you enable this function, the drive has a different acceleration and deceleration curve based on the acceleration and deceleration time.
- The S-curve function is disabled when you set the acceleration and deceleration time to 0.

- When Pr.01-12, 01-14, 01-16, 01-18 ≥ Pr.01-24 and Pr.01-25,
  the actual acceleration time = Pr.01-12, 01-14, 01-16, 01-18 + (Pr.01-24 + Pr.01-25) ÷ 2.
- When Pr.01-13, 01-15, 01-17, 01-19 ≥ Pr.01-26 and Pr.01-27,
  the actual deceleration time = Pr.01-13, 01-15, 01-17, 01-19 + (Pr.01-26 + Pr.01-27) ÷ 2.

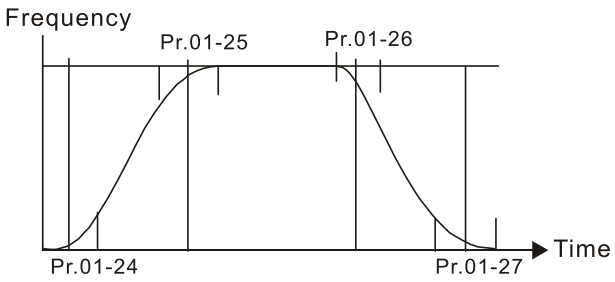

01-28	Skip Frequency 1 (Upper Limit)
01-29	Skip Frequency 1 (Lower Limit)
01-30	Skip Frequency 2 (Upper Limit)
01-31	Skip Frequency 2 (Lower Limit)
01-32	Skip Frequency 3 (Upper Limit)
01-33	Skip Frequency 3 (Lower Limit)

Default: 0.00

Settings 0.00–599.00 Hz

- Sets the AC drive's skip frequency. The drive's frequency setting skips these frequency ranges. However, the frequency output is continuous. There are no limits for these six parameters and you can combine them. Pr.01-28 does not need to be greater than Pr.01-29; Pr.01-30 does not need to be greater than Pr.01-31; Pr.01-32 does not need to be greater than Pr.01-33. Pr.01-28–01-33 can be set as required. There is no size distinction among these six parameters.
- These parameters set the skip frequency ranges for the AC motor drive. You can use this function to avoid frequencies that cause mechanical resonance. The skip frequencies are useful when a motor has resonance vibration at a specific frequency bandwidth. Skipping this frequency avoids the vibration. There are three frequency skip zones available. You can set the Frequency command (F) within the range of skip frequencies. Then the output frequency (H) is limited to the

lower limit of skip frequency ranges.

- When accelerating and decelerating, the output frequency still passes through the skip frequency ranges.

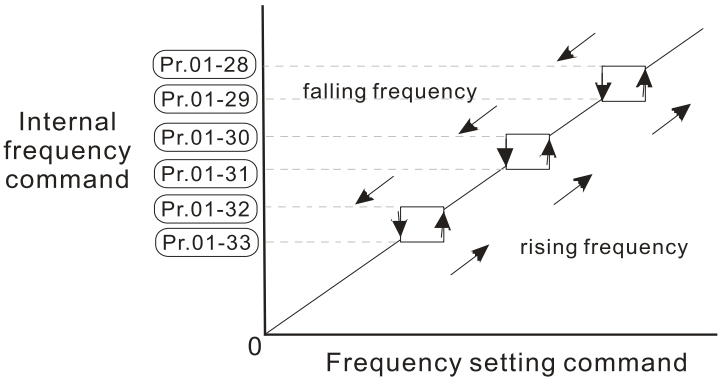

01-34 Zero-speed Mode

Default: 0

Settings 0: Output waiting
1: Zero-speed operation
2: Fmin (refer to Pr.01-07, 01-41)

- When the frequency command of drive is less than Fmin (Pr.01-07, Pr.01-41), the drive operates using this parameter.
- 0: the AC motor drive is in waiting mode without voltage output from terminals U, V, W.
- 1: the drive executes the DC brake by Vmin (Pr.01-08 and Pr.01-42) in V/F and SVC modes.
- 2: the AC motor drive runs using Fmin (Pr.01-07, Pr.01-41) and Vmin (Pr.01-08, Pr.01-42) in V/F and SVC modes.

  In V/F and SVC modes:

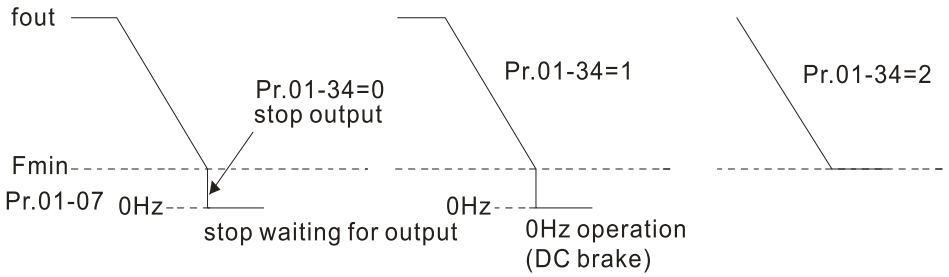

01-43 V/F Curve Selection

Default: 0

Settings 0: V/F curve determined by Pr.01-00–01-08
1: V/F curve to the power of 1.5
2: V/F curve to the power of 2

- When setting to 0, refer to Pr.01-01–01-08 for the motor 1 V/F curve. For motor 2, refer to Pr.01-35–01-42.
- When setting to 1 or 2, the second and third voltage frequency settings are invalid.
- If the load on the motor is a variable torque load (torque is in direct proportion to rotating speed, such as the load of a fan or a pump), the load torque is low at low rotating speed. Decreasing the input voltage to make the magnetic field of the input current smaller and reduce flux loss and iron loss for the motor to increase efficiency.

- When you set the V/F curve to high power, it has lower torque at low frequency, and the drive is not suitable for rapid acceleration and deceleration. Do NOT use this parameter for rapid acceleration and deceleration.

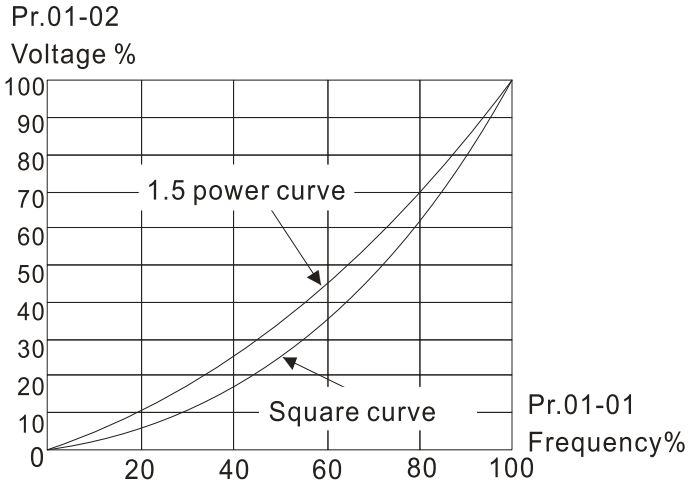

01-44 Auto-Acceleration and Auto-Deceleration Setting

Default: 0

Settings
0: Linear acceleration and linear deceleration
1: Auto-acceleration and linear deceleration
2: Linear acceleration and auto-deceleration
3: Auto-acceleration and auto-deceleration
4: Stall prevention by auto-acceleration and auto-deceleration (limited by Pr.01-12–01-21)

- 0 (linear acceleration and linear deceleration): the drive accelerates and decelerates according to the setting for Pr.01-12–01-19.
- 1 or 2 (auto/linear acceleration and auto/linear deceleration): the drive reduces the mechanical vibration and prevents the complicated auto-tuning processes. It does not stall during acceleration and has no need for a brake resistor. It can also improve operation efficiency and save energy.
- 3 (auto-acceleration and auto-deceleration): the drive auto-detects the load torque and accelerates from the fastest acceleration time and smoothest start current to the setting frequency. When decelerating, the drive auto-detects the load re-generation and stops the motor smoothly with the fastest deceleration time.
- 4 (stall prevention by auto-acceleration and auto-deceleration (limited by Pr.01-12–01-21)): if the acceleration and deceleration is within a reasonable range, the drive accelerates and decelerates according to Pr.01-12–01-19. If the acceleration and deceleration time is too short, the actual acceleration and deceleration time are greater than the acceleration and deceleration time settings.

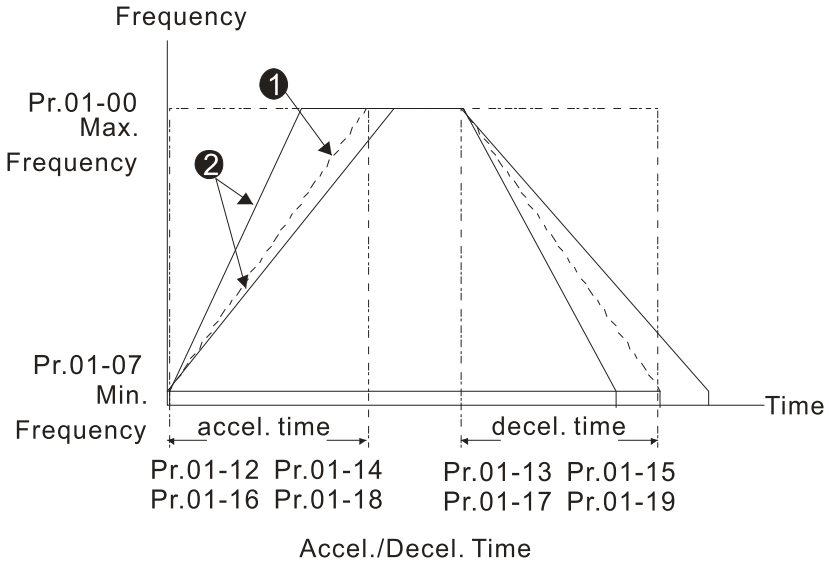

❶ When Pr.01-44 is set to 0.

❷ When Pr.01-44 is set to 3.

01-45 Time Unit for Acceleration and Deceleration and S-Curve

Default: 0

Settings 0: Unit 0.01 sec.
1: Unit 0.1 sec.

01-49 Deceleration Method Selection

Default: 0

Settings 0: Normal deceleration
1: Over voltage energy restriction
2: Traction energy control (TEC)

- 0: decelerate or stop in accordance with the original deceleration setting.
- The actual deceleration time of the motor is higher than the deceleration time setting due to the over-voltage stall prevention.
- 1: during deceleration, the drive controls the motor according to the setting of Pr.06-01 and the voltage recovery rate of the DC bus. The controller starts when the DC bus voltage reaches 95% of Pr.06-01. When Pr.06-01 is set to 0, the drive controls the motor according to the operating voltage and the voltage recovery rate of the DC bus. This method decelerates according to the setting for the deceleration time. The fastest actual deceleration time is not less than the deceleration time setting.
- 2: during deceleration, the drive controls the motor according to the setting of Pr.06-01 and the voltage recovery rate of the DC bus. The controller starts when the DC bus voltage reaches 95% of Pr.06-01, auto-tunes the output frequency and the output voltage to accelerate consumption of the regenerative energy according to the drive's capability, and the deceleration time is the result of the drive's auto-tuning. Use this setting when over-voltage occurs due to unexpected deceleration time.

[This page intentionally left blank]

02 Digital Input / Output Parameters

You can set this parameter during operation.

02-00 Two-wire / Three-wire Operation Control

Default: 1

Settings
0: No function
1: Two-wire mode 1, power on for operation control
(M1: FWD / STOP, M2: REV / STOP)
2: Two-wire mode 2, power on for operation control
(M1: RUN / STOP, M2: FWD / REV)
3: Three-wire, power on for operation control
(M1: RUN, M2: REV / FWD, M3: STOP)
4: Two-wire mode 1, Quick Start
(M1: FWD / STOP, M2: REV / STOP)
5: Two-wire mode 2, Quick Start
(M1: RUN / STOP, M2: FWD / REV)
6: Three-wire, Quick Start
(M1: RUN, M2: REV / FWD, M3: STOP)

- In the Quick Start function, the output remains ready for operation. The drive responds to the Start command immediately.
- When using Quick Start function, the output terminals UVW are with driving voltages in order to output and respond immediately if a Start command is given. Do not touch the terminals or modify the motor wiring to prevent electric shocks.
- This parameter sets the configuration of the external drive operation control and the Quick Start function. There are six different control modes listed in the following table.

Pr.02-00	External Terminal Control Circuits
Setting value: 1 Two-wire FWD / STOP REV / STOP	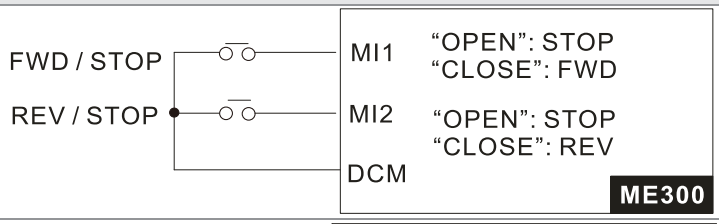
Setting value: 2 Two-wire RUN / STOP FWD / REV	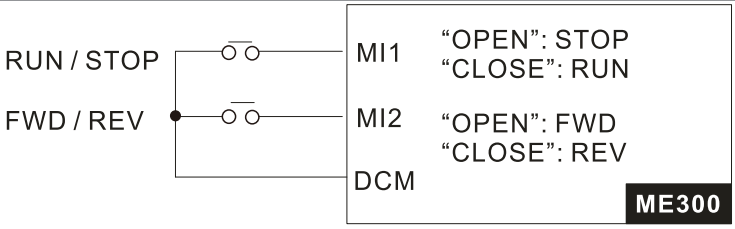
Setting value: 3 Three-wire	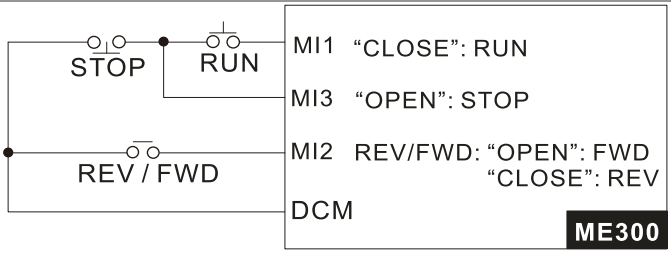

Pr.02-00	External Terminal Control Circuits
Setting value: 4 Two-wire Quick Start	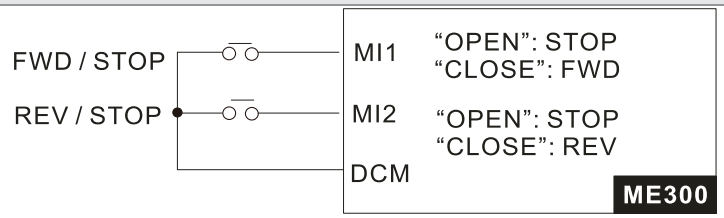
Setting value: 5 Two-wire Quick Start	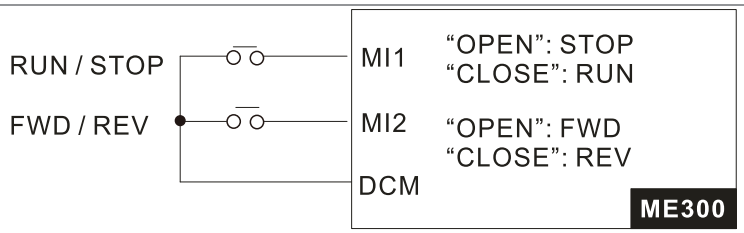
Setting value: 6 Three-wire Quick Start	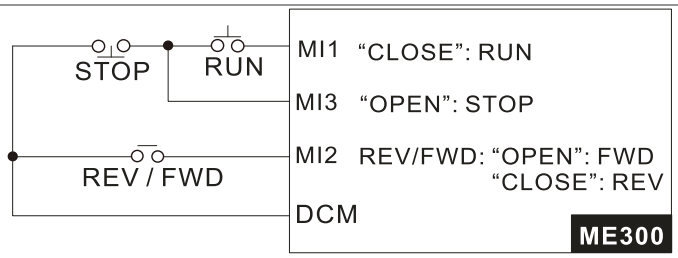

02-01 Multi-function Input Command 1 (MI1)

02-02 Multi-function Input Command 2 (MI2)

Default: 0

02-03 Multi-function Input Command 3 (MI3)

Default: 1

02-04 Multi-function Input Command 4 (MI4)

Default: 2

02-05 Multi-function Input Command 5 (MI5)

Default: 3

Settings 0: No function

1: Multi-step speed command 1

2: Multi-step speed command 2

3: Multi-step speed command 3

4: Multi-step speed command 4

5: Reset

6: JOG operation (by KPC-CC01 or external control)

7: Acceleration / deceleration speed inhibit

8: The first and second acceleration / deceleration time selection

9: The third and fourth acceleration / deceleration time selection

10: External Fault (EF) input (Pr.07-20)

11: B.B. input from external (Base Block)

12: Output stop

13: Cancel the setting for auto-acceleration / auto-deceleration time

15: Rotating speed command from AVI

18: Forced to stop (Pr.07-20)

19: Digital up command
20: Digital down command
21: PID function disabled
22: Clear the counter
23: Input the counter value (MI4)
24: FWD JOG command
25: REV JOG command
28: Emergency stop (EF1)
29: Signal confirmation for Y-connection
30: Signal confirmation for Δ-connection
38: Disable writing EEPROM function
40: Force coasting to stop
41: HAND switch
42: AUTO switch
49: Enable Drive
50: Slave dEb action to execute
56: Local / Remote selection
58: Enable fire mode (with RUN command)
59: Enable fire mode (without RUN command)
69: Auto-activate preheating command
70: Force auxiliary frequency return to 0
71: Disable PID function, force PID output return to 0
72: Disable PID function, retain the output value before disabled
73: Force PID integral gain return to 0, disable integral
74: Reverse PID feedback
77: PLC Program Running
78: PLC Program Step Completed
79: PLC Program Completed
80: PLC Operation Paused
83: Multi-motors (IM) selection bit 0
94: Programmable AUTO RUN
95: Pausing AUTO RUN
97: Multi-pumps switch by Hand / Auto mode
98: Simple positioning stop by forward limit
99: Simple positioning stop by reverse limit

- This parameter selects the functions for each multi-function terminal.
- When Pr.02-00 = 0, you can set multi-function options with the multi-function input terminals MI1, MI2.
- When Pr.02-00 ≠ 0, the multi-function input terminals MI1, MI2 work in accordance with the setting values for Pr.02-00.

Example:

If Pr.02-00 = 1: multi-function input terminal MI1 = FWD / STOP,
multi-function input terminal MI2 = REV / STOP.

If Pr.02-00 = 2: multi-function input terminal MI1 = RUN / STOP,
multi-function input terminal MI2 = FWD / REV.

🕮 If Pr.02-00 is set to three-wire operation control, terminal MI3 is for the STOP contact. The function set previously for this terminal is automatically invalid.

Summary of function settings

Take the normally opened contact (N.O.) for example, ON: contact is closed, OFF: contact is open.

Settings	Functions	Descriptions
0	No function	
1	Multi-step speed command 1	You can set 15 steps of speed or 15 positions with the digital status of these 4 terminals. You can use 16-steps of speed if you include the master speed when setting as 15 steps of speed (refer to Parameter Group 04 Multi-step Speed Parameters).
2	Multi-step speed command 2	
3	Multi-step speed command 3	
4	Multi-step speed command 4	
5	Reset	Use this terminal to reset the drive after clearing a drive fault.
6	JOG operation	This function is valid when the source of the operation command is the external terminals. The JOG operation executes when the drive stops completely. While running, you can still change the operation direction, and the STOP key on the keypad is valid. Once the external terminal receives the OFF command, the motor stops in the JOG deceleration time. Refer to Pr.01-20–01-22 for details. 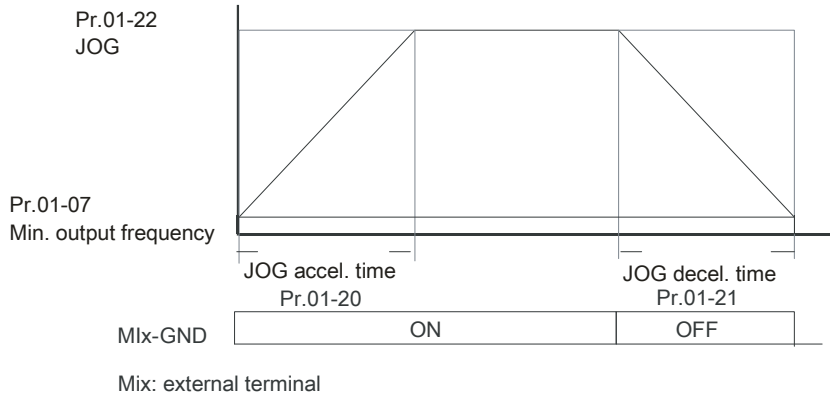 Mix: external terminal

Settings	Functions	Descriptions
7	Acceleration / deceleration speed inhibit	When you enable this function, the drive stops acceleration or deceleration immediately. After you disable this function, the AC motor drive starts to accelerate or decelerate from the inhibit point. 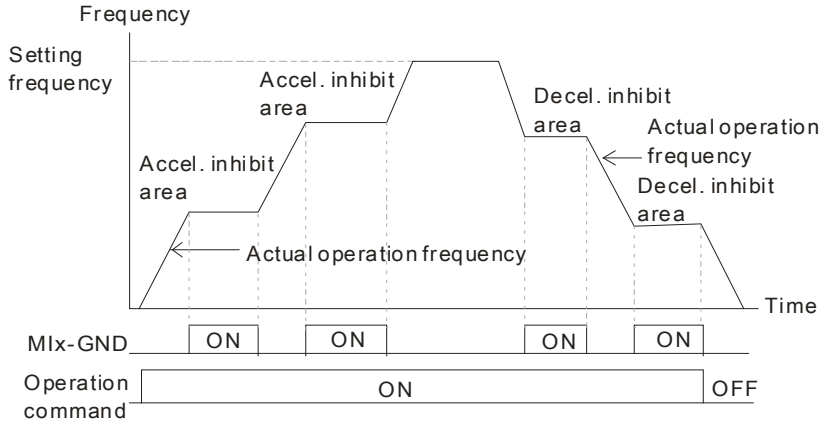
8	The first, second acceleration / deceleration time selection	You can select the acceleration and deceleration time of the drive with this function, or from the digital status of the terminals; there are four acceleration and deceleration selections.
9	The third, fourth acceleration / deceleration time selection	
10	EF input (EF: External Fault)	For external fault input. The drive decelerates according to the Pr.07-20 setting, and the keypad shows “EF” (it shows the fault record when an external fault occurs). The drive keeps running until the fault is cleared (terminal status restored) after RESET.
11	B.B. input from external (B.B.: Base Block)	ON: the output of the drive stops immediately. The motor is in free run and the keypad displays the B.B. signal. Refer to Pr.07-08 for details.
12	Output stop (output pause)	When the switch is ON, output of the drive stops immediately and the motor is in free run status. The drive is in output waiting status until the switch is turned to OFF, and then the drive restarts and runs to the current setting frequency. 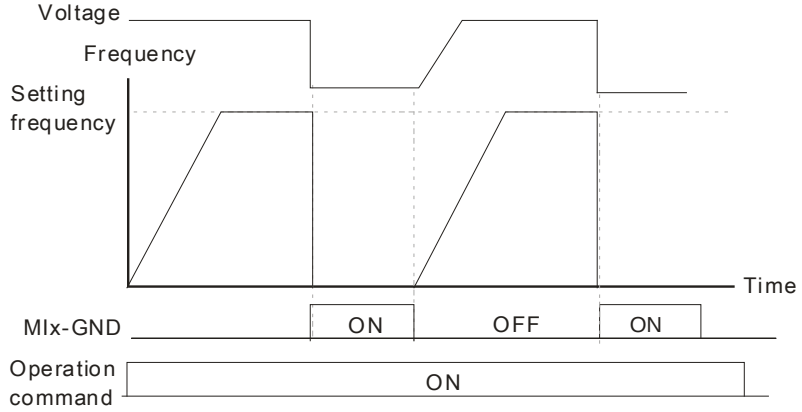

Settings	Functions	Descriptions
13	Cancel the setting for auto-acceleration / auto-deceleration time	Set Pr.01-44 to one of the 01–04 setting modes before using this function. When this function is enabled, OFF is for auto mode and ON is for linear acceleration / deceleration.
15	Rotating speed command from AVI	ON: force the source of the frequency to be AVI. If the rotating speed commands are set to AVI and ACI at the same time, the priority is AVI > ACI.
18	Forced to stop (Pr.07-20)	ON: the drive ramps to stop according to the Pr.07-20 setting.
19	Digital up command	ON: the frequency of the drive increases or decreases by one unit. If this function remains ON continuously, the frequency increases or decreases according to Pr.02-09 / Pr.02-10.
20	Digital down command	The Frequency command returns to zero when the drive stops, and the displayed frequency is 0.00 Hz. If you select Pr.11-00, bit 7 = 1, the frequency is not saved.
21	PID function disabled	ON: the PID function is disabled.
22	Clear the counter	ON: the current counter value is cleared and displays 0. The drive counts up when this function is disabled.
23	Input the counter value (MI4)	On: the counter value increases by 1. Use the function with Pr.02-19.
24	FWD JOG command	This function is valid when the source of the operation command is external terminal. ON: the drive executes forward JOG.
25	REV JOG command	This function is valid when the source of the operation command is external terminal. ON: the drive executes reverse JOG.
28	Emergency stop (EF1)	ON: the output of the drive stops immediately, displays “EF1” on the keypad, and the motor is in free run status. The drive keeps running until the fault is cleared after you press RESET on the keypad (EF: External Fault). 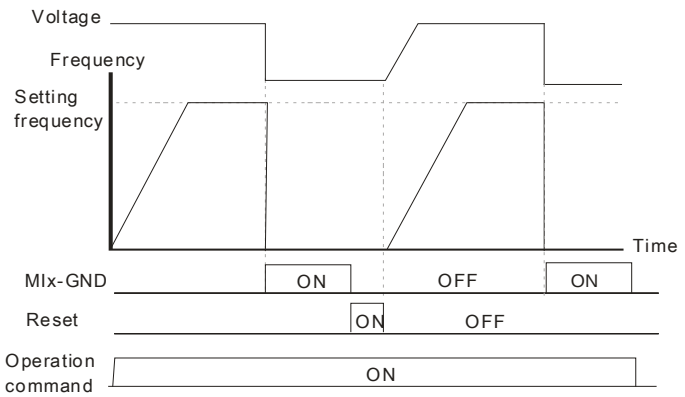
29	Signal confirmation for Y-connection	When the control mode is V/F, ON: the drive operates by the first V/F.
30	Signal confirmation for Δ-connection	When the control mode is V/F, ON: the drive operates by the second V/F.

<table>
<tr><th>Settings</th><th>Functions</th><th>Descriptions</th></tr>
<tr><td>38</td><td>Disable EEPROM write function (parameters memory disable)</td><td>ON: writing to EEPROM is disabled. Changed parameters are not saved after power off.</td></tr>
<tr><td>40</td><td>Force coasting to stop</td><td>ON: during operation, the drive free runs to stop.</td></tr>
<tr><td>41</td><td>HAND switch</td><td rowspan="2">1. When the MI terminal switches to OFF, it executes a STOP command. Therefore, if the MI terminal switches to OFF during operation, the drive stops.
2. Use the optional keypad KPC-CC01 to switch between HAND and AUTO. The drive stops first, and then switches to HAND or AUTO status.
3. The optional digital keypad KPC-CC01 displays the current status of the drive (HAND / OFF / AUTO).
<table>
<tr><th></th><th>bit 1</th><th>bit 0</th></tr>
<tr><td>OFF</td><td>0</td><td>0</td></tr>
<tr><td>AUTO</td><td>0</td><td>1</td></tr>
<tr><td>HAND</td><td>1</td><td>0</td></tr>
<tr><td>OFF</td><td></td><td>1</td></tr>
</table>
</td></tr>
<tr><td>42</td><td>AUTO switch</td></tr>
<tr><td>49</td><td>Enable drive</td><td>When the drive is enabled, the RUN command is valid.
When the drive is disabled, the RUN command is invalid.
When the drive is operating, the motor coasts to stop.
This function varies with MO=45.</td></tr>
<tr><td>50</td><td>Master dEb input</td><td>Enter the message setting in this parameter when the master triggers dEb. This ensures that the slave also triggers dEb, then master and slave stop simultaneously.</td></tr>
<tr><td>56</td><td>LOCAL / REMOTE selection</td><td>Use Pr.00-29 to select LOCAL / REMOTE mode (refer to Pr.00-29). When Pr.00-29 is not set to 0, the optional digital keypad KPC-CC01 displays the LOC / REM status.
<table>
<tr><th></th><th>bit 0</th></tr>
<tr><td>REM</td><td>0</td></tr>
<tr><td>LOC</td><td>1</td></tr>
</table>
</td></tr>
<tr><td>58</td><td>Enable fire mode (with RUN command)</td><td>When fire occurs, enable this terminal to make the drive enter the fire mode to force the drive to run. If the drive is in stop status, enable this terminal to make the drive enter the fire mode to force the drive to run according to Pr.06-80 settings. (Refer to Pr.06-80, 06-81, 06-88 for details)</td></tr>
<tr><td>59</td><td>Enable fire mode (without RUN command)</td><td>When fire occurs, enable this terminal to make the drive enter the fire mode.
If the drive is in stop status, enable this terminal to make the drive enter the fire mode, but the drive does not run.
If the drive is in running status, enable this terminal to run the drive according to Pr.06-80 settings. (Refer to Pr.06-80, 06-81, 06-88 for details)</td></tr>
</table>

<table>
<tr><th>Settings</th><th>Functions</th><th>Descriptions</th></tr>
<tr><td>69</td><td>Auto-activate preheating function</td><td>When you set MI = 69 (auto-activate preheating function), the enabling and disabling for preheating function is determined by MI.</td></tr>
<tr><td>70</td><td>Force auxiliary frequency return to 0</td><td>Forces the auxiliary frequency return to 0 when using this function. PID keeps operating if PID is the master frequency. When Pr.00-35 ≠ 0, the master and auxiliary frequencies are enabled, and then selecting this function with the terminal effectively forces the auxiliary frequency return to 0.</td></tr>
<tr><td>71</td><td>Disable PID function, force PID output return to 0</td><td>When the master and auxiliary frequencies are enabled and when using the PID function, ON: PID does not operate, returns the integral value to 0, and forces the PID output return to 0.</td></tr>
<tr><td>72</td><td>Disable PID function, retain the output value before disabled</td><td>When the master and auxiliary frequency are enabled, and the PID function is enabled, and the terminal contact of this parameter is ON, then PID does not operate, and its output value remains the same as the value before it was disabled.</td></tr>
<tr><td>77</td><td>PLC Program Running</td><td>Terminal output is activated when the PLC program is running.</td></tr>
<tr><td>78</td><td>PLC Program Step Completed</td><td>Terminal output is activated for 0.5 sec. when each multi-step speed is attained.</td></tr>
<tr><td>79</td><td>PLC Program Completed</td><td>Terminal output is activated for 0.5 sec. when the PLC program cycle has completed.</td></tr>
<tr><td>80</td><td>PLC Operation Paused</td><td>Terminal output is activated when PLC operation is paused.</td></tr>
<tr><td>83</td><td>Multi-motors (IM) selection bit 0</td><td>ON: parameters can be changed
Example: MI1 = 83
<table>
<tr><th rowspan="2">MI1</th><th rowspan="2">Motor Selection</th><th colspan="2">Related Motor Parameter</th></tr>
<tr><th>Max. Operation Frequency</th><th>V/F Curve Parameter</th></tr>
<tr><td>OFF</td><td>Motor 1</td><td>Pr.01-00</td><td>Pr.01-01–01-08</td></tr>
<tr><td>ON</td><td>Motor 2</td><td>Pr.01-52</td><td>Pr.01-35–01-42</td></tr>
</table></td></tr>
<tr><td>94</td><td>Programmable AUTO RUN</td><td> 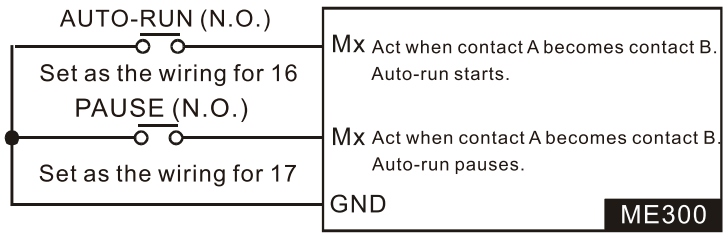
</td></tr>
<tr><td>95</td><td>Pausing AUTO RUN</td><td>When the functional terminals for programmable auto-run enable, the output frequency of the AC motor drive operates automatically according to the settings for multi-step speed.
You can pause the terminals to temporarily stop the running program during operation. The program resumes running after the pausing finishes.</td></tr>
</table>

Settings	Functions	Descriptions
97	Multi-pumps switch by Hand / Auto mode	Use this terminal to switch between Hand / Auto mode.
98	Simple positioning stop by forward limit	If the motor receives this signal while running forward, it stops running forward.
99	Simple positioning stop by reverse limit	If the motor receives this signal while running reverse, it stops running reverse.

02-09 External terminal UP / DOWN Key Mode

Default: 0

Settings 0: By the acceleration / deceleration time
1: Constant speed (Pr.02-10)
2: Pulse signal (Pr.02-10)
3: Curve
4: Step (Pr.02-10)

02-10 External terminal Constant Speed, Acceleration / Deceleration Speed of the UP / DOWN Key

Default: 0.001

Settings 0.001–1.000 Hz / ms

- Use when the multi-function input terminals are set to 19, 20 (UP / DOWN command). The frequency increases or decreases according to Pr.02-09 and Pr.02-10.
- When Pr.11-00 bit 7=1, the frequency is not saved. The Frequency command returns to zero when the drive stops, and the displayed frequency is 0.00 Hz. At this time, the increasing or decreasing frequency command (F) by using the UP or DOWN key is valid only when the drive is running.
- When Pr.02-09 is set to 0: the increasing or decreasing frequency command (F) operates according to the setting for acceleration or deceleration time (refer to Pr.01-12–01-19).

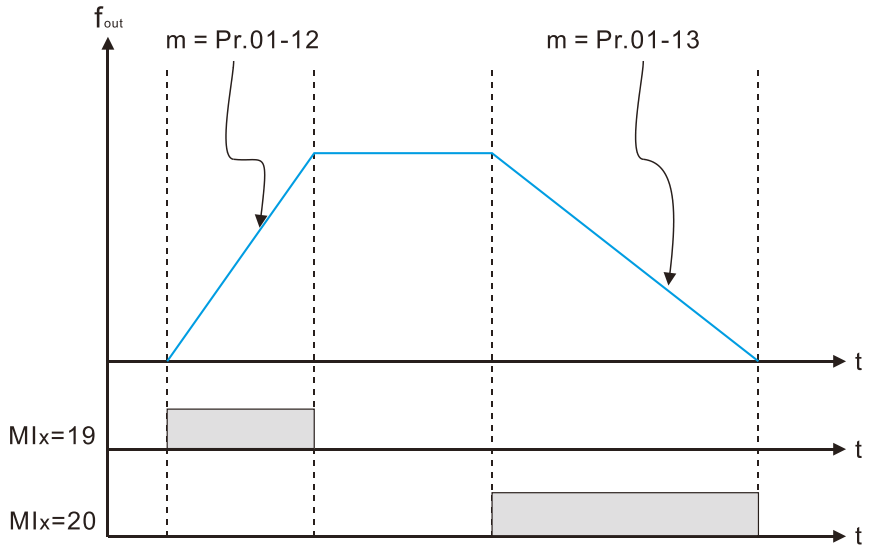

- When Pr.02-09 is set to 1: the increasing / decreasing frequency command (F) operates according to the setting of Pr.02-10 (0.001–1.000 Hz/ms).

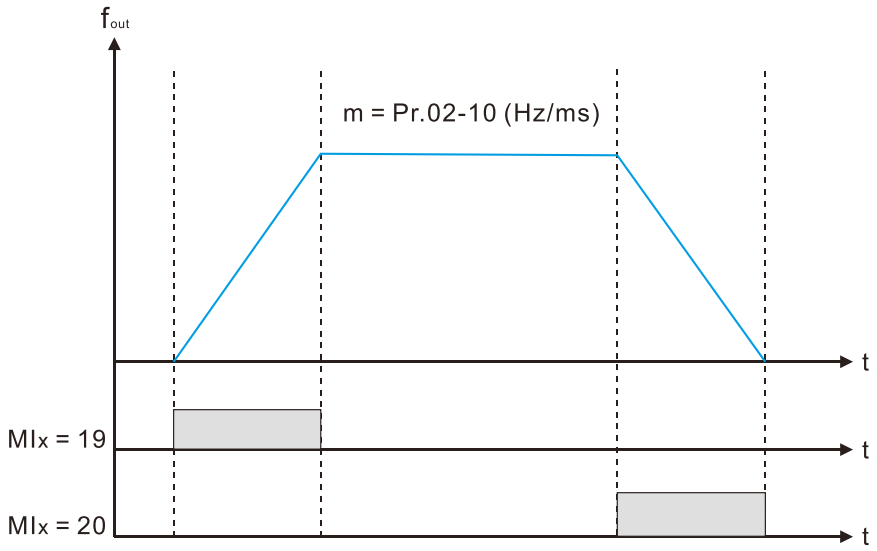

When Pr.02-09 is set to 2: the increasing / decreasing frequency command (F) operates according to the pulse of Pr.02-10.

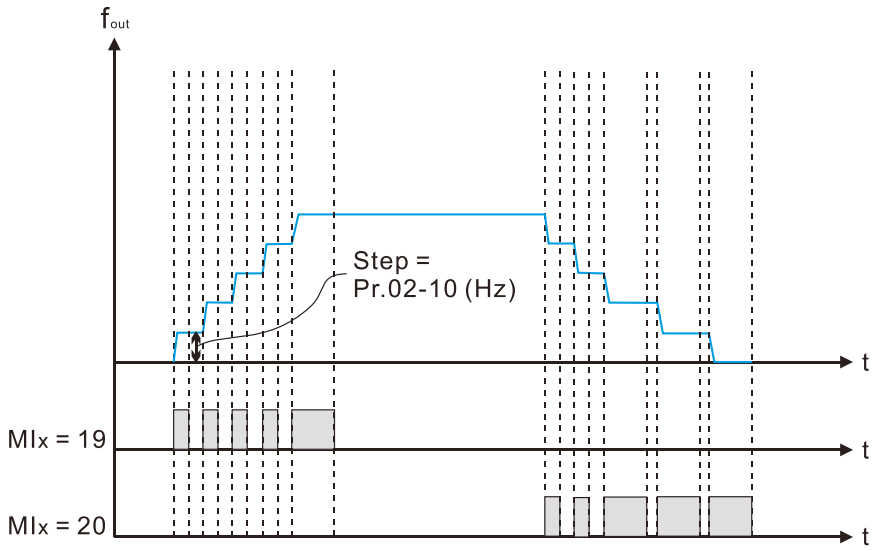

When Pr.02-09 is set to 3: the increasing / decreasing frequency command (F) operates according to the exponential curve.

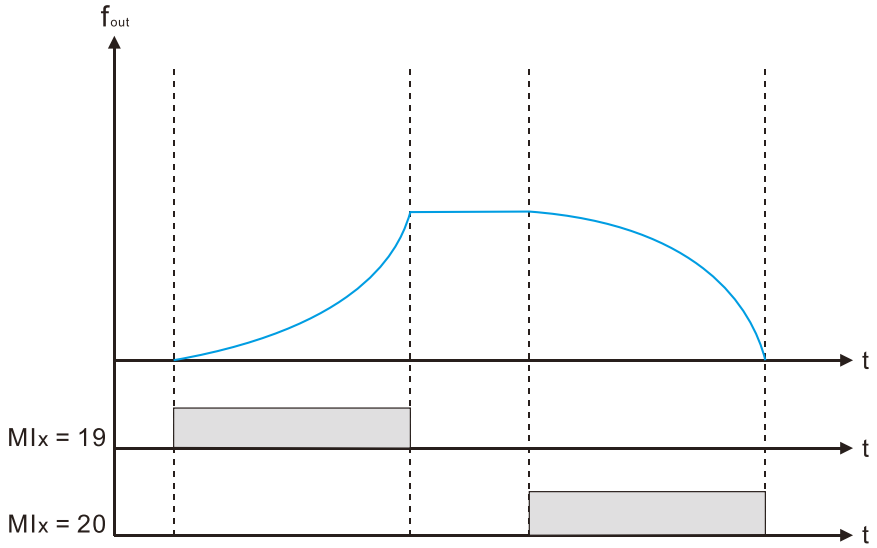

When Pr.02-09 is set to 4: the increasing / decreasing frequency command (F) operates according to the setting of Pr.02-10 per every 100 ms.

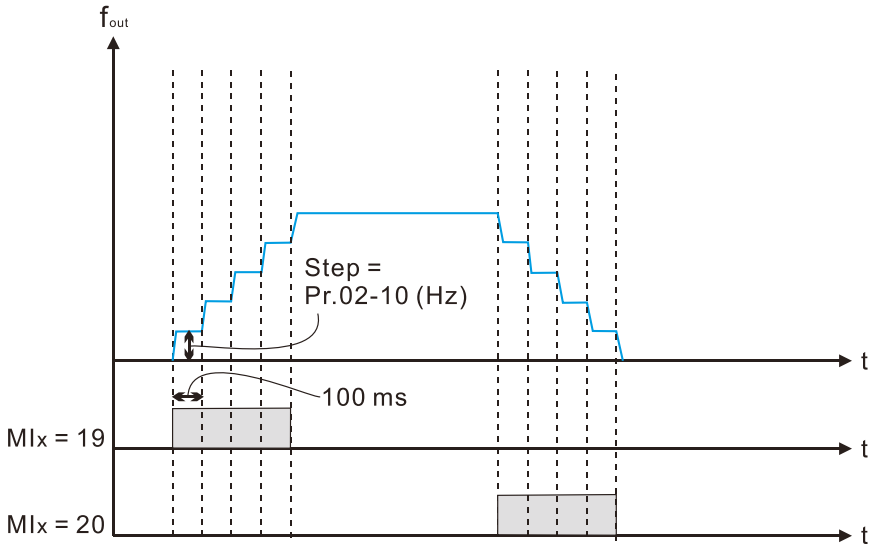

02-11 Multi-function Input Response Time

Default: 0.005

Settings 0.000–30.000 sec.

Use this parameter to set the response time of the digital input terminals MI1–MI5.

This function is to delay and confirm the digital input terminal signal. The time for delay is also the time for confirmation. The confirmation prevents interference that could cause error in the input to the digital terminals. But in the meanwhile, it delays the response time though confirmation improves accuracy.

02-12 Multi-function Input Mode Selection

Default: 0000

Settings 0000h–FFFFh (0: N.O.; 1: N.C.)

This parameter setting is in hexadecimal.

This parameter sets the status of the multi-function input signal (0: normally open; 1: normally closed) and it is not affected by the status of SINK / SOURCE.

bit 0–bit 4 correspond to MI1–MI5.

The default for bit 0 (MI1) is FWD terminal, and the default for bit 1 (MI2) is REV terminal. You cannot use this parameter to change the input mode when Pr.02-00 ≠ 0.

You can change the terminal ON / OFF status through communications.

For example: MI3 is set to 1 (multi-step speed command 1) and MI4 is set to 2 (multi-step speed command 2). Then the forward + second step speed command = $1001_2 = 9_{10}$.

As long as Pr.02-12 = 9 is set through communications, there is no need to wire any multi-function terminal to run forward with the second step speed.

bit 4	bit 3	bit 2	bit 1	bit 0
MI5	MI4	MI3	MI2	MI1

Use Pr.11-42 bit 1 to select whether the FWD / REV terminal is controlled by Pr.02-12 bit 0 and bit 1.

02-13 Multi-function Output 1 (Relay1)

Default: 11

02-16 Multi-function Output 2 (MO1)

Default: 0

Settings
0: No function
1: Indication during RUN
2: Operation speed reached
3: Desired frequency reached 1 (Pr.02-22)
4: Desired frequency reached 2 (Pr.02-24)
5: Zero speed (Frequency command)
6: Zero speed, includes STOP (Frequency command)
7: Over-torque 1 (Pr.06-06–06-08)
8: Over-torque 2 (Pr.06-09–06-11)
9: Drive is ready
10: Low voltage warning (Lv) (Pr.06-00)
11: Malfunction indication
13: Overheat warning (Pr.06-15)
14: Software brake signal indication (Pr.07-00)
15: PID feedback error (Pr.08-13, Pr.08-14)
16: Slip error (oSL)
17: Count value reached (Pr.02-20; does not return to 0)
18: Count value reached (Pr.02-19; returns to 0)
19: External interrupt B.B. input (Base Block)
20: Warning output
21: Over-voltage
22: Over-current stall prevention
23: Over-voltage stall prevention
24: Operation source
25: Forward command
26: Reverse command
29: Output when frequency ≥ Pr.02-34
30: Output when frequency < Pr.02-34
31: Y-connection for the motor coil
32: Δ-connection for the motor coil
33: Zero speed (actual output frequency)
34: Zero speed include STOP (output frequency)
35: Error output selection 1 (Pr.06-23)
36: Error output selection 2 (Pr.06-24)
37: Error output selection 3 (Pr.06-25)
38: Error output selection 4 (Pr.06-26)
40: Speed reached (including STOP)

42: Crane function
43: Motor speed detection
44: Low current output (use with Pr.06-71–Pr.06-73)
45: UVW output electromagnetic valve ON / OFF switch
46: Master dEb output
51: Analog output control for RS-485 interface
53: Fire mode indication
67: Analog input level reached
69: Indication of Preheating
75: Forward RUN status
76: Reverse RUN status
77: Program Running Indication
78: Program Step Completed Indication
79: Program Running Completed Indication
80: Program Running Paused Indication
81: Multi-pump system error display (only master)

📖 Use this parameter to set the function of the multi-function terminals.

Summary of function settings

Take the normally open contact (N.O.) for example, ON: contact is closed, OFF: contact is open.

Settings	Functions	Descriptions
0	No Function	Output terminal with no function
1	Indication during RUN	Active when the drive is not in STOP.
2	Operation speed reached	Active when output frequency of the drive reaches the setting frequency.
3	Desired frequency reached 1 (Pr.02-22)	Active when the desired frequency (Pr.02-22) reached.
4	Desired frequency reached 2 (Pr.02-24)	Active when the desired frequency (Pr.02-24) reached.
5	Zero speed (Frequency command)	Active when frequency command = 0 (the drive must be in RUN status).
6	Zero speed, includes STOP (Frequency command)	Active when frequency command = 0 or stopped.
7	Over-torque 1	Active when the drive detects over-torque. Pr.06-07 sets the over-torque detection level (motor 1), and Pr.06-08 sets the over-torque detection time (motor 1). Refer to Pr.06-06–06-08.
8	Over-torque 2	Active when the drive detects over-torque. Pr.06-10 sets the over-torque detection level (motor 2), and Pr.06-11 sets the over-torque detection time (motor 2). Refer to Pr.06-09–06-11.

Settings	Functions	Descriptions
9	Drive is ready	Active when the drive is ON with no error detected.
10	Low voltage warn (Lv)	Active when the DC BUS voltage is too low (refer to Pr.06-00 Low Voltage Level).
11	Malfunction indication	Active when fault occurs (except Lv stop).
13	Overheat warning	Active when IGBT or heat sink overheats; to prevent the drive from shutting down due to over-heating (refer to Pr.06-15).
14	Software brake signal indication	Active when the soft brake function is ON (refer to Pr.07-00).
15	PID feedback error (Pr.08-13, Pr.08-14)	Active when the PID feedback signal error is detected.
16	Slip error (oSL)	Active when the slip error is detected.
17	Count value reached (Pr.02-20)	When the drive executes external counter, this contact is active if the count value is equal to the setting value for Pr.02-20. This contact is not active when the setting value for Pr.02-20 > Pr.02-19.
18	Count value reached (Pr.02-19)	When the drive executes the external counter, this contact is active if the count value is equal to the setting value for Pr.02-19.
19	External interrupt B.B. input (Base Block)	Active when external interrupt (B.B.) stop output occurs in the drive.
20	Warning output	Active when a warning is detected.
21	Over-voltage	Active when over-voltage is detected.
22	Over-current stall prevention	Active when over-current stall prevention is detected.
23	Over-voltage stall prevention	Active when over-voltage stall prevention is detected.
24	Operation source	Active when the source of operation command is controlled by the digital keypad (Pr.00-21 = 0).
25	Forward command	Active when the operation direction is forward.
26	Reverse command	Active when the operation direction is reverse.
29	Output when frequency ≥ Pr.02-34	Active when the frequency is ≥ Pr.02-34 (actual output frequency H ≥ Pr.02-34).
30	Output when frequency < Pr.02-34	Active when frequency is < Pr.02-34 (actual output frequency H < Pr.02-34).
31	Y-connection for the motor coil	Active when Pr.05-24 = 1, the frequency output is lower than Pr.05-23 minus 2 Hz, and the time is longer than Pr.05-25.
32	Δ-connection for the motor coil	Active when Pr.05-24 = 1, the frequency output is higher than Pr.05-23 plus 2 Hz, and the time is longer than Pr.05-25.
33	Zero speed (actual output frequency)	Active when the actual output frequency is 0 (the drive is in RUN mode).

Settings	Functions	Descriptions
34	Zero speed includes stop (output frequency)	Active when the output frequency is 0 or stopped.
35	Error output selection 1 (Pr.06-23)	Active when Pr.06-23 is ON.
36	Error output selection 2 (Pr.06-24)	Active when Pr.06-24 is ON.
37	Error output Selection 3 (Pr.06-25)	Active when Pr.06-25 is ON.
38	Error output Selection 4 (Pr.06-26)	Active when Pr.06-26 is ON.
40	Speed reached (including Stop)	Active when the output frequency reaches the setting frequency or stopped.
42	Crane function	Use this function with Pr.02-34 and Pr.02-58. Refer to Pr.02-34 and Pr.02-58 for details.
43	Motor speed detection	Active when motor speed is less than Pr.02-47.
44	Low current output	Use this function with Pr.06-71–Pr.06-73.
45	UVW output electromagnetic valve ON / OFF switch	Use this function with external terminal input = 49 (drive enabled) and external terminal output = 45 (electromagnetic valve enabled), and then the electromagnetic valve is ON or OFF according to the status of the drive. 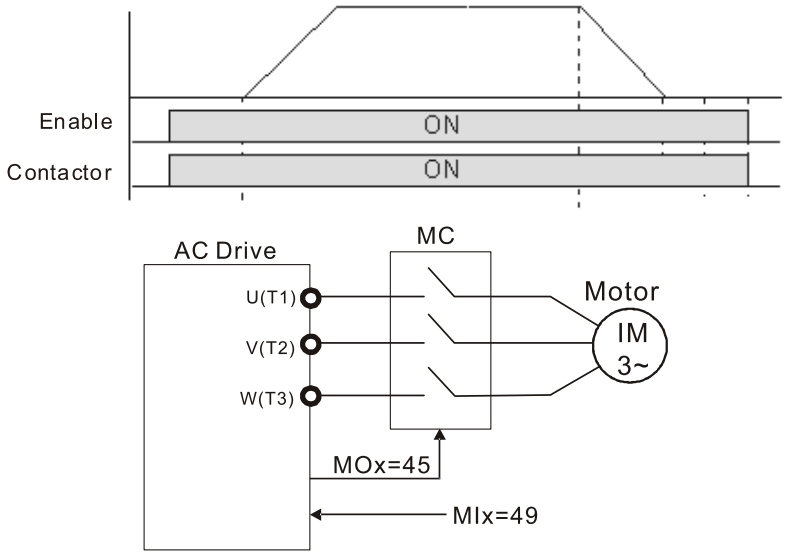
46	Master dEb output	When dEb rises at the master, MO sends a dEb signal to the slave. Output the message when the master triggers dEb. This ensures that the slave also triggers dEb. Then slave follows the deceleration time of the master to stop simultaneously with the master.
51	Analog output control for RS-485 interface	For RS-485 communication control output.
53	Fire mode indication	Activates when MI setting 58 or 59 is enabled.

Settings	Functions	Descriptions
67	Analog input level reached output	The multi-function output terminals operate when the analog input level is between the high level and the low level. • Pr.03-44: Select one of the analog input channels (AVI, ACI) to be compared. • Pr.03-45: The high level for the analog input, default is 50%. • Pr.03-46: The low level for the analog input, default is 10%. • If analog input > Pr.03-45, the multi-function output terminal operates. • If analog input < 03-46, the multi-function output terminal stops output.
69	Indication of Preheating	Active when preheating function is enabled.
75	Forward RUN status	When the drive runs FWD, the output terminal status for forward running is closed; when the drive stops, the output terminal status for forward running is open.
76	Reverse RUN status	When the drive runs REV, the output terminal status for reverse running is closed; when the drive stops, the output terminal status for reverse running is open.
77	Program Running Indication	Closed when running program auto-run.
78	Program Step Completed Indication	Closed for only 0.5 second whenever completing one step during program auto-run.
79	Program Running Completed Indication	Closed for only 0.5 seconds when the program auto-run completes all steps.
80	Program Running Paused Indication	Closed when the action of auto-run terminals are paused externally during program auto-run.
81	Multi-pump system error display (only Master)	Closed when errors occur on all drives for the multi-pump system.

02-18 Multi-function Output Direction

Default: 0000h

Settings 0000h–FFFFh (0:N.O.; 1:N.C.)

- This parameter is in hexadecimal.
- This parameter is set by a bit. If the bit is 1, the corresponding multi-function output acts in an opposite way.

  Example:

  Assume Pr.02-13 = 1 (indication when the drive is operating). If the output is positive, the bit is set to 0, and then Relay is ON when the drive runs and is OFF when the drive stops. On the contrary, if the output is negative, and the bit is set to 1, then the Relay is OFF when the drive runs and is ON when the drive stops.

bit 3	bit 2	bit 1	bit 0
MO1	reserved	reserved	RY

02-19 Terminal Counting Value Reached (returns to 0)

Default: 0

Settings 0–65500

- The counting function is enabled when Pr.02-19 ≠ 0.
- This parameter uses the optional keypad KPC-CC01.

You can set the input point for the counter using the multi-function terminal MI4 as a trigger terminal (set Pr.02-04 to 23). When counting is completed, the specified multi-function output terminal is activated (Pr.02-13 or Pr.02-16 is set to 18).

The timing diagram below shows that when counting to 5, RY1 activates and displays 0.

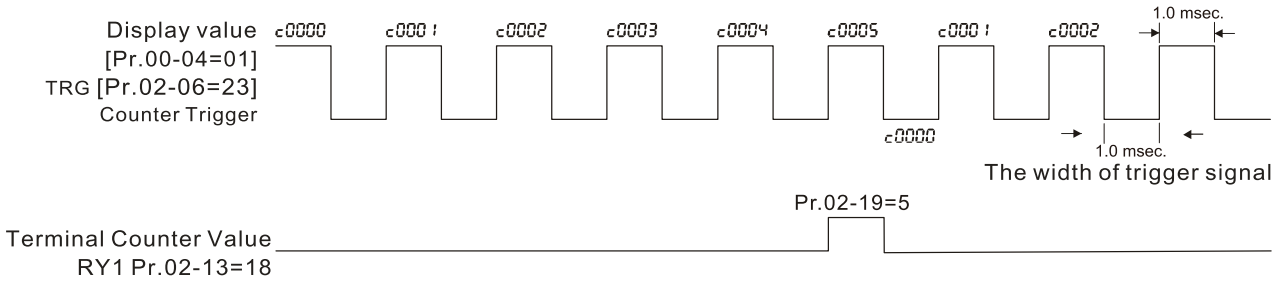

The timing diagram of
the external counting terminals and the counting value reached

02-20 Preliminary Counting Value Reached (does not return to 0)

Default: 0

Settings 0–65500

- Use this parameter with Pr.02-19.
- When the count value counts from 1 to reach this value, the corresponding multi-function output terminal is activated (Pr.02-13 and Pr.02-16 is set to 17) and keeps counting to the last count value.
- You can use this parameter as the end of counting to make the drive run from the low speed to stop.

The timing diagram is RY1 activates when the count value is three, and the display returns to zero when counts to five:

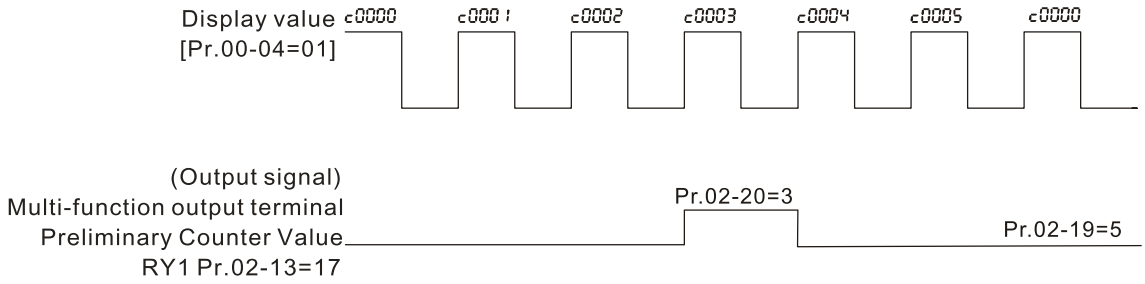

The timing diagram of
the external counting terminals and the counting value reached

02-22 Desired Frequency Reached 1

Default: 60.00 / 50.00

Settings 0.00–599.00 Hz

02-23 The width of the desired frequency reached 1

Default: 2.00

Settings 0.00–599.00 Hz

02-24 Desired Frequency Reached 2

Default: 60.00 / 50.00

Settings 0.00–599.00 Hz

02-25 The width of the desired frequency reached 2

Default: 2.00

Settings 0.00–599.00 Hz

Once the output speed (frequency) reaches the desired speed (frequency), if the corresponding multi-function output terminal is set to 3 or 4 (Pr.02-13 and Pr.02-16), this multi-function output terminal is “closed”.

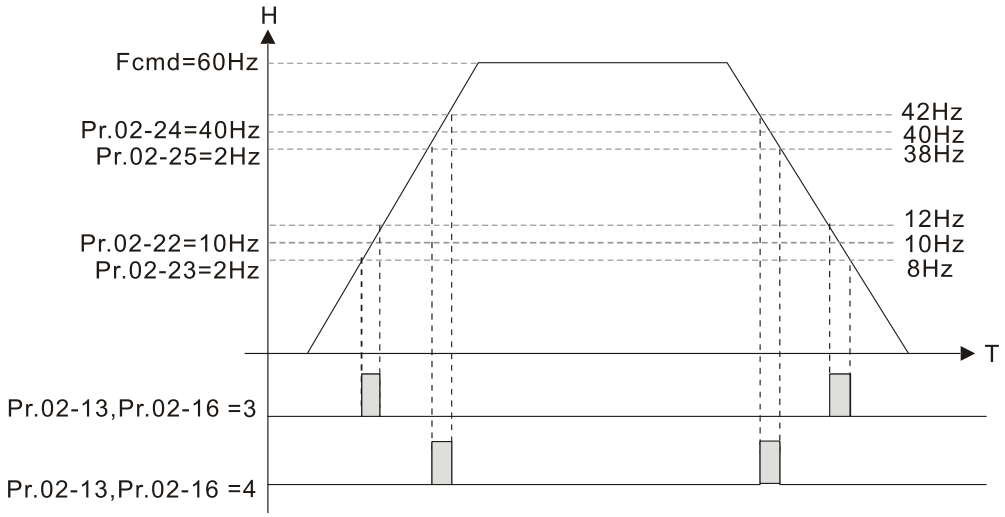

02-34 Output Frequency Setting for Multi-function Output Terminal

Default: 0.00

Settings 0.00–599.00 Hz

02-58 Multi-function Output Terminal: Function 42: Brake Frequency Check Point

Default: 0.00

Settings 0.00–599.00 Hz

You can use Pr.02-34 with Pr.02-58 for the crane function. You can choose the crane action # 42 to set the multi-function outputs Pr.02-13 and Pr.02-16.

When the output frequency of the drive is higher than the setting for Pr.02-34 frequency level (≥ Pr.02-34), choose # 42 to set the multi-function output terminal.

When the output frequency is lower than the setting for Pr.02-58 (< Pr.02-58), choose # 42 to disable the multi-function output terminal.

Crane application example:

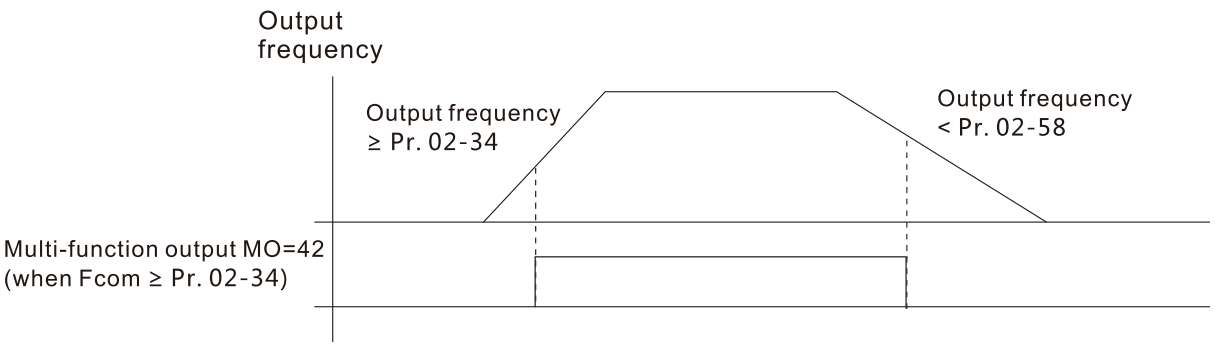

It is recommended that you use this with the Dwell function as shown in the following diagram:

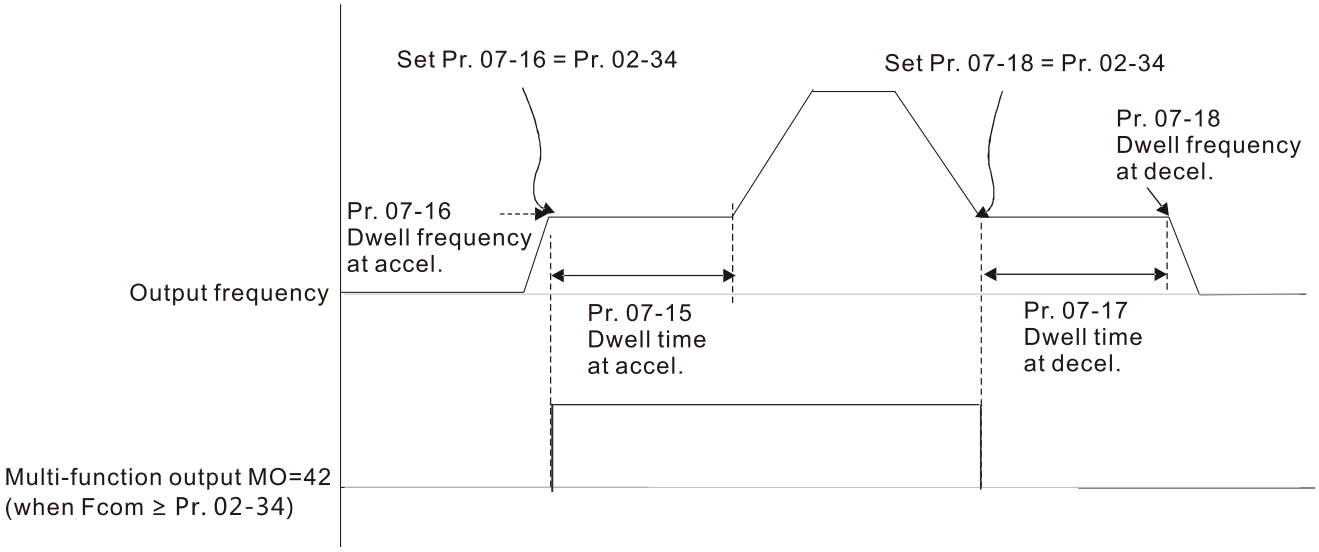

02-35 External Operation Control Selection after Reset and Reboot

Default: 0

Settings 0: Disable

1: Drive runs if the RUN command remains after reset or reboot.

Set value as 1.

Please pay attention that the drive will execute the running command by itself in the following status.

- Status 1: After the drive is powered on and the external terminal for RUN stays ON, the drive runs.
- Status 2: After clearing a fault once a fault is detected and the external terminal for RUN stays ON, you can run the drive by pressing the RESET key.

02-47 Motor Zero-speed Level

Default: 0

Settings 0–65535 rpm

- Use this parameter to set the level of motor at zero-speed. When the speed is lower than this setting, the corresponding multi-function output terminal that is set to 43 is ON (default), as shown below:

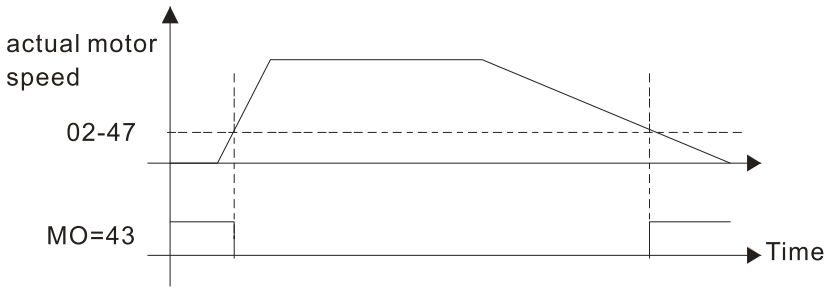

02-50 Display the Status of the Multi-function Input Terminal

Default: Read only

Settings Monitor the status of the Multi-function Input Terminal

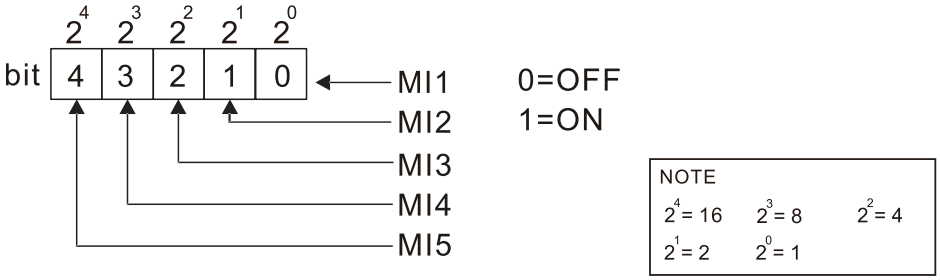

Example:

When Pr.02-50 displays 0014h (hex) (that is, the value is 52 (decimal) and 10100 (binary)), it means that MI3 and MI5 are ON.

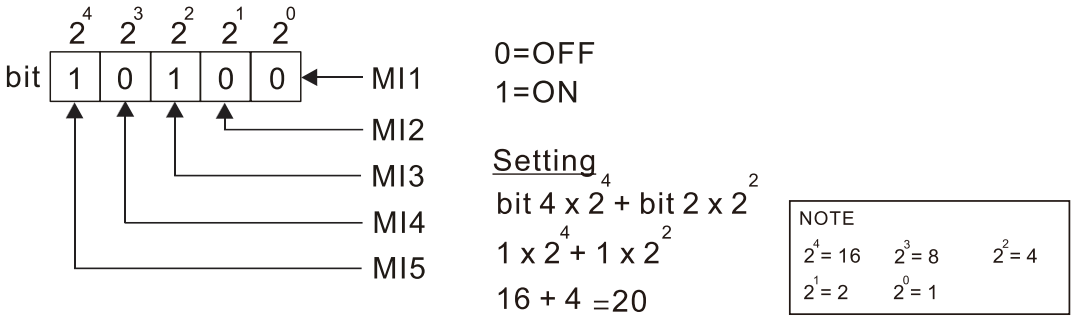

02-51 Display the Status of the Multi-function Output Terminal

Default: Read only

Settings Monitor the status of the Multi-function Output Terminal

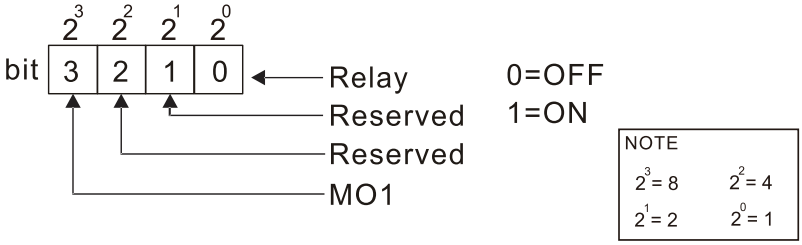

Example:

When Pr.02-51 displays 0009h (hex) (that is, the value is 9 (decimal) and 01001 (binary)), it means that Relay and MO1 are ON.

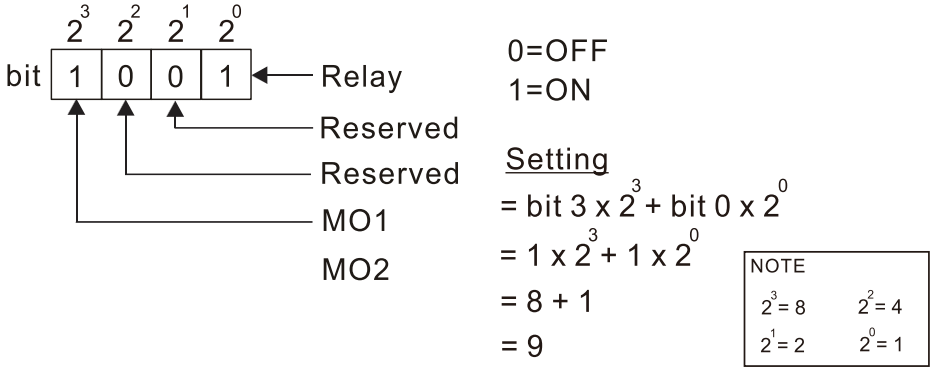

02-54 Display the Frequency Command Executed by the External Terminal

Default: Read only

Settings 0.00–599.00 Hz (Read only)

📖 When you set the source of the Frequency command as the external terminal, if Lv or Fault occurs, the external terminal Frequency command is saved in this parameter.

02-72 Preheating output current level

Default: 0

Settings 0–100 %

📖 This parameter controls the level of the preheating DC current input to the motor. The percentage of the preheating DC current equals to the percentage of motor rated current (Pr.05-01). Therefore, when you set this parameter, increase the level slowly to reach the desired preheating temperature.

📖 Related parameters: Pr.02-73 Preheating DC Current Duty Cycle, Pr.02-13 and 16 Multi-function Output Relay 69: Indication of Preheating Function, Pr.02-01–05 Multi-function Input Terminal 69: Auto-activate preheating function.

02-73 Preheating output cycle

Default: 0

Settings 0–100 %

📖 This parameter is to set up the duty cycle of the preheating DC current input to the motor. 0–100% corresponds to 0–10 sec. If the setting is 0%, there is no output current from the motor drive. If the setting is 100%, there is continuous output DC current. For example, when the setting of this parameter is 50%, the cycle time is the time spent to input current to motor for 5 seconds and stop inputting for 5 seconds. When MI #69 is enabled, this parameter operates periodically with MI #69 until the motor drive starts to run the motor or until MI # 69 is disabled.

📖 Preheating function works only when the setting value for Pr.02-72 and Pr.02-73 are not 0.

📖 When MI = 69 (auto-activate preheating function) is enabled, MI = 69 controls the start and stop of preheating function.

📖 When MI = 69 is DISABLED, the preheating function starts after:
The motor drive stops its first operation. The motor drive cycles the power.

📖 The figure below shows the timing relationship when MI = 69 auto-activate preheating function is enabled and when preheating DC current is enabled and cycle time is 50%.

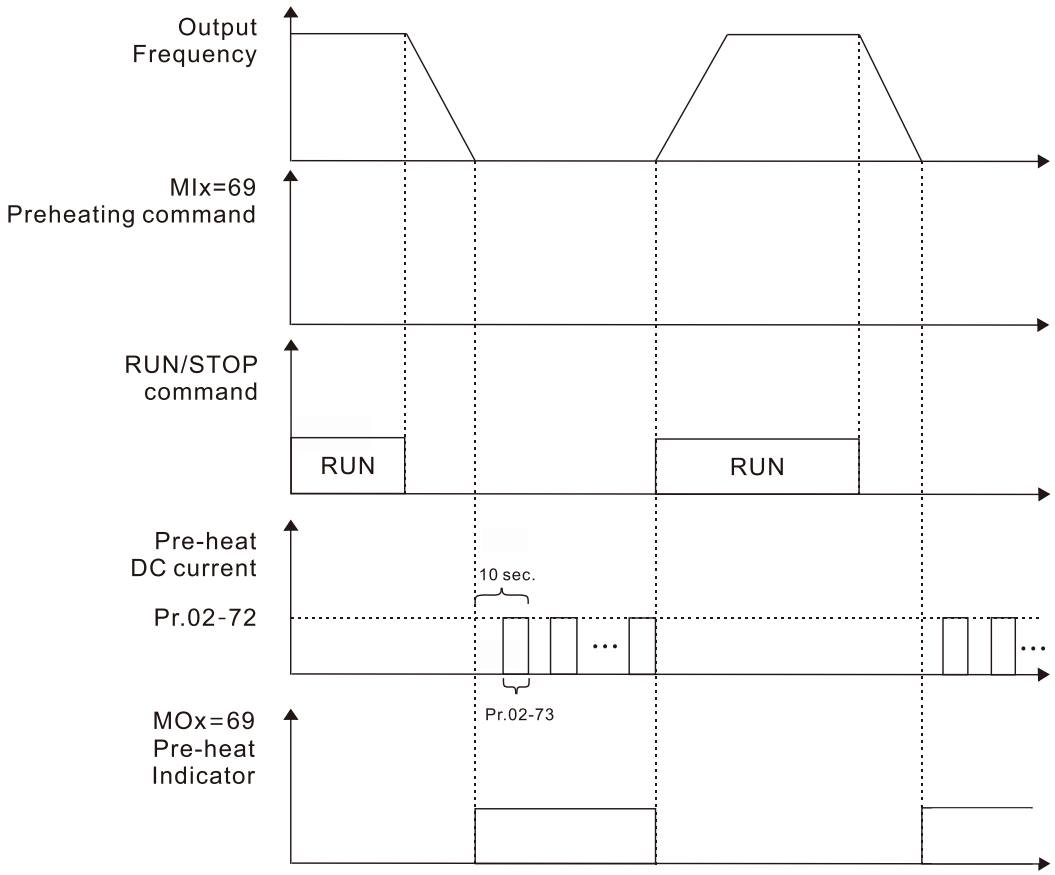

The figure below shows the timing relationship when MI = 69 auto-activate preheating function is disabled and when preheating DC current is enabled and cycle time is 50%. When the motor drive is stopped, the preheating function starts to output DC current continuously.

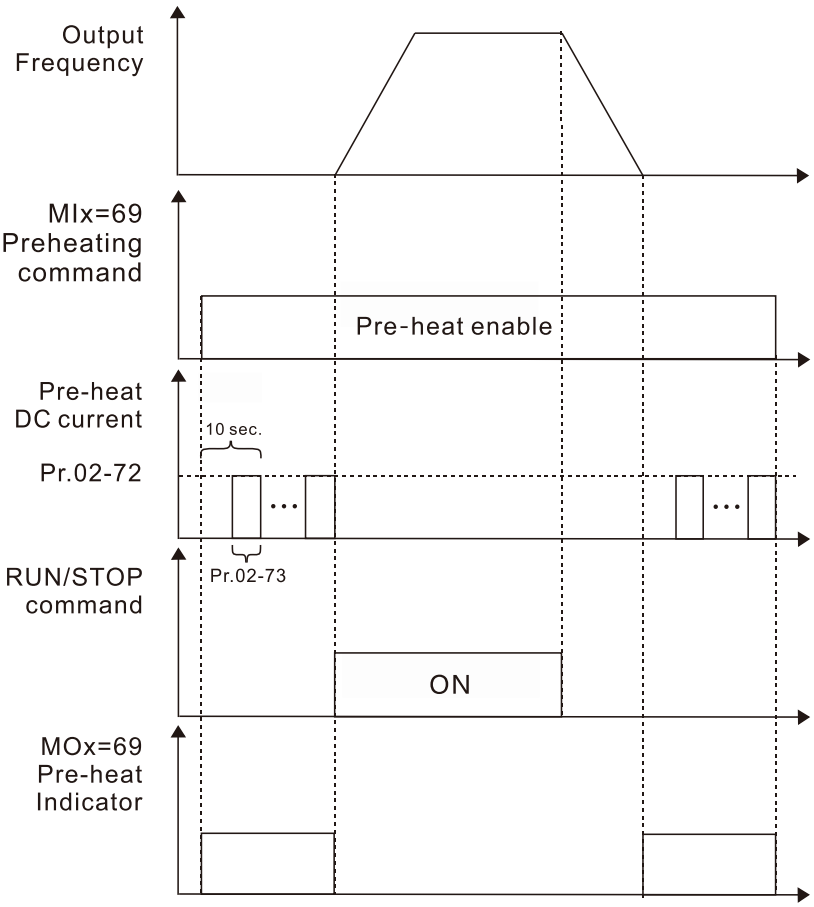

The figure below shows the timing relationship between preheating function and enabling DC brake.

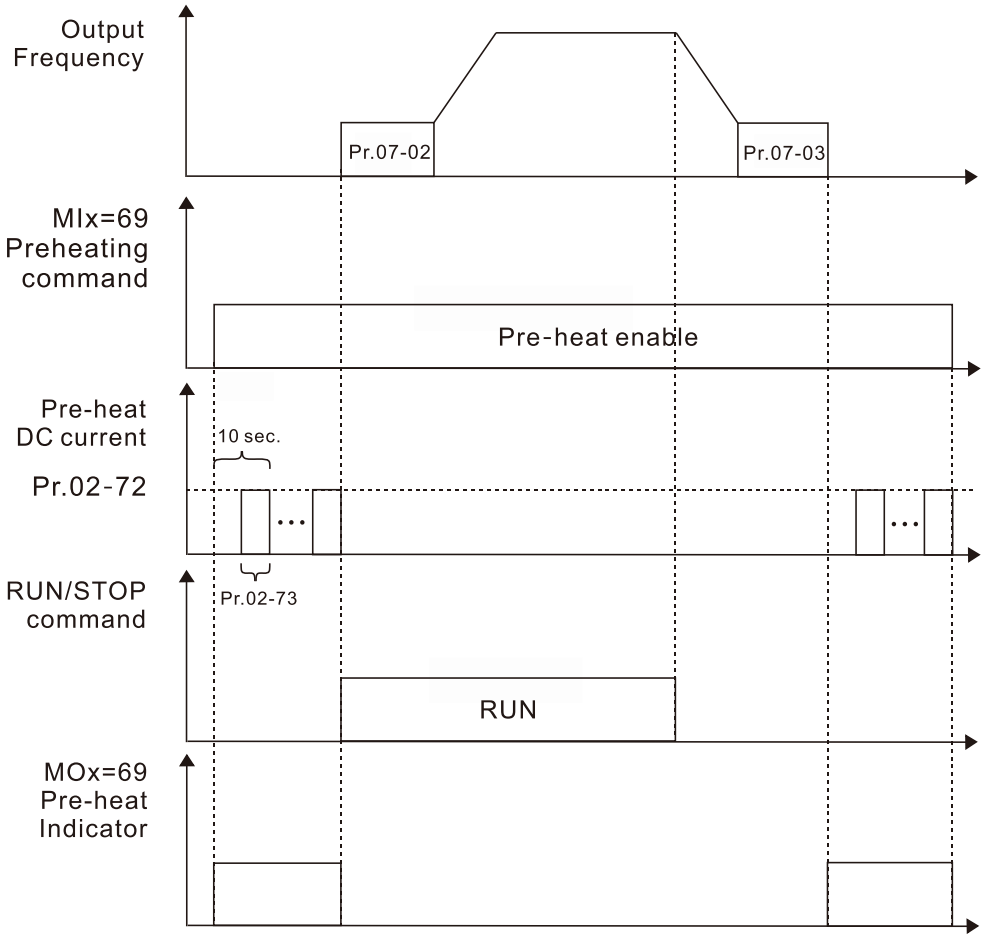

02-81 EF Active when the Terminal Count Value Reached

Default: 0

Settings 0: Terminal count value reached, no EF displays (continues operate).
1: Terminal count value reached, EF is active.

02-82 Initial Frequency Command (F) Mode after Stop

Default: 0

Settings 0: Use current Frequency command
1: Use zero Frequency command
2: Refer to Pr.02-83 to set up

02-83 Initial Frequency Command (F) Setting after Stop

Default: 60.00

Settings 0.00–599.0 Hz

[This page intentionally left blank]

03 Analog Input / Output Parameters

You can set this parameter during operation.

03-00 Analog Input Selection (AI)

Default: 1

Settings
0: No function
1: Frequency command
4: PID target value
5: PID feedback signal
6: Thermistor (PTC) input value
11: PT100 thermistor input value
12: Auxiliary frequency input
13: PID compensation value

- When you use analog input as the PID reference target input, you must set Pr.00-20 to 2 (external analog input).
  Setting method 1: Pr.03-00 set 1 as frequency command.
  Setting method 4: Pr.03-00 set 4 as PID reference target input.
- When you use analog input as the PID compensation value, you must set Pr.08-16 to 1 (source of PID compensation value is analog input). You can see the compensation value with Pr.08-17.
- When you use the frequency command, the corresponding value for 0– ±10 V / 4–20 mA is 0–maximum operation frequency (Pr.01-00).

03-03 Analog Input Bias (AVI)

Default: 0

Settings -100.0–100.0%

- Sets the corresponding AVI voltage for the external analog input 0.

03-04 Analog Input Bias (ACI)

Default: 0

Settings -100.0–100.0%

- Sets the corresponding ACI voltage for the external analog input 0.

03-07 Positive / Negative Bias Mode (AVI)
03-08 Positive / Negative Bias Mode (ACI)

Default: 0

Settings
0: No bias
1: Lower than or equal to bias
2: Greater than or equal to bias
3: The absolute value of the bias voltage while serving as the center
4: Bias serves as the center

- In a noisy environment, use negative bias to provide a noise margin. Do NOT use less than 1 V to set the operation frequency.

03-10 Reverse Setting when Analog Signal Input is Negative Frequency

Default: 0

Settings 0: Negative frequency input is not allowed. The digital keypad or external terminal controls the forward and reverse direction.

1: Negative frequency input is allowed. Positive frequency = run in a forward direction; negative frequency = run in a reverse direction. The digital keypad or external terminal control cannot change the running direction.

- Use Pr.03-10 to enable running in the reverse direction command when a negative frequency (negative bias and gain) is input to the AVI or ACI analog signal input.
- Condition for negative frequency (reverse)
  1. Pr.03-10 = 1
  2. Bias mode = Bias serves as the center
  3. Corresponded analog input gain < 0 (negative); this makes the input frequency negative.

In the diagram below: Black line: Curve with no bias. Gray line: curve with bias

Diagram 01

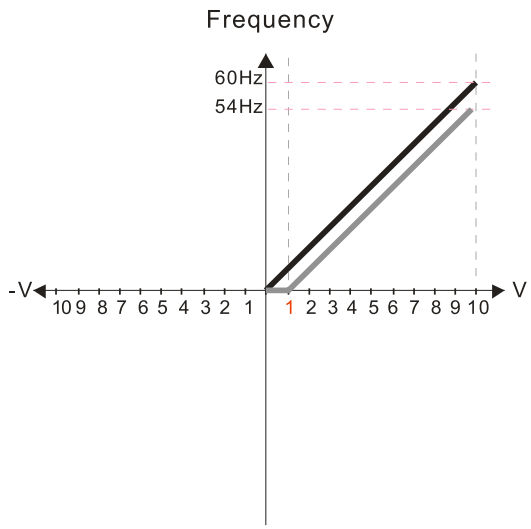

Pr.03-03=10%
Pr.03-07–03-08 (Positive/Negative Bias Mode)

0: No bias
1: Lower than or equal bias
2: Greater than or equal to bias
3: The absolute value of the bias voltage while serving as the center
4: Bias serves as the center

Pr.03-10 (Analog Frequency Command for Reverse Run)
0: Negative frequency is not valid. Forward and reverse run is controlled by digital keyboard or external terminals.
1: Negative frequency is valid. Positive frequency = forward run; negative frequency = reverse run. Direction can not be switched by digital keypad or external terminal control.

Pr.03-11 Analog input Gain (AVI) = 100%

Diagram 02

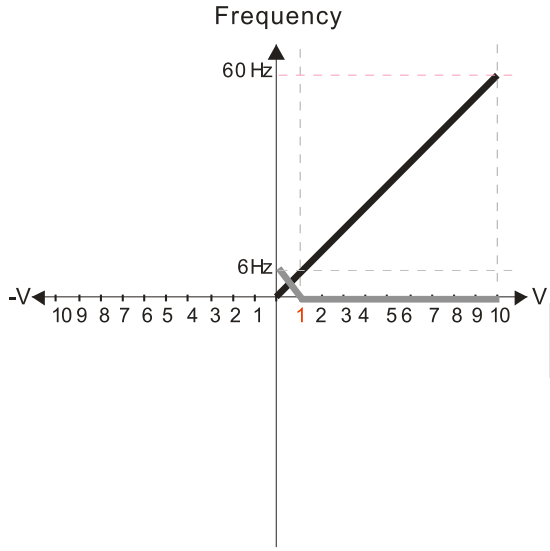

Pr.03-03=10%
Pr.03-07–03-08 (Positive/Negative Bias Mode)

0: No bias
1: Lower than or equal bias
2: Greater than or equal to bias
3: The absolute value of the bias voltage while serving as the center
4: Bias serves as the center

Pr.03-10 (Analog Frequency Command for Reverse Run)
0: Negative frequency is not valid. Forward and reverse run is controlled by digital keyboard or external terminals.
1: Negative frequency is valid. Positive frequency = forward run; negative frequency = reverse run. Direction can not be switched by digital keypad or external terminal control.

Pr.03-11 Analog input Gain (AVI) = 100%

Diagram 03

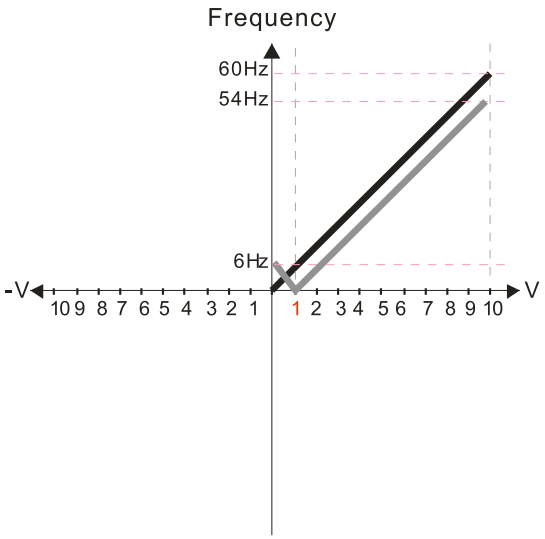

Pr.03-03=10%
Pr.03-07–03-08 (Positive/Negative Bias Mode)

0: No bias
1: Lower than or equal bias
2: Greater than or equal to bias
3: The absolute value of the bias voltage while serving as the center
4: Bias serves as the center

Pr.03-10 (Analog Frequency Command for Reverse Run)
0: Negative frequency is not valid.
Forward and reverse run is controlled by digital keyboard or external terminals.
1: Negative frequency is valid.
Positive frequency = forward run;
negative frequency = reverse run.
Direction can not be switched by digital keypad or external terminal control.

Pr.03-11 Analog input Gain (AVI) = 100%

Diagram 04

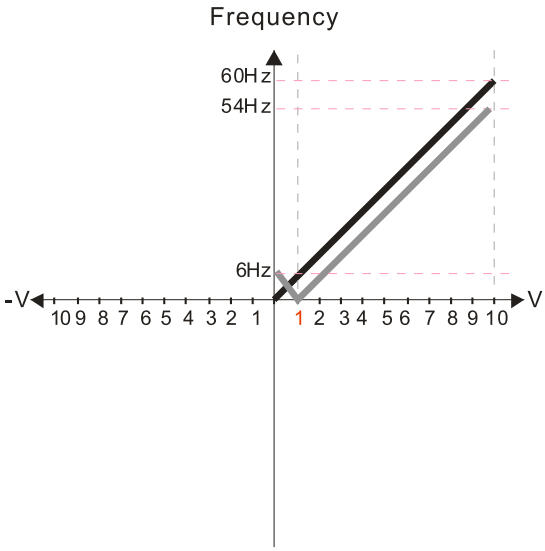

Pr.03-03=10%
Pr.03-07–03-08 (Positive/Negative Bias Mode)

0: No bias
1: Lower than or equal bias
2: Greater than or equal to bias
3: The absolute value of the bias voltage while serving as the center
4: Bias serves as the center

Pr.03-10 (Analog Frequency Command for Reverse Run)
0: Negative frequency is not valid.
Forward and reverse run is controlled by digital keyboard or external terminals.
1: Negative frequency is valid.
Positive frequency = forward run;
negative frequency = reverse run.
Direction can not be switched by digital keypad or external terminal control.

Pr.03-11 Analog input Gain (AVI) = 100%

Diagram 05

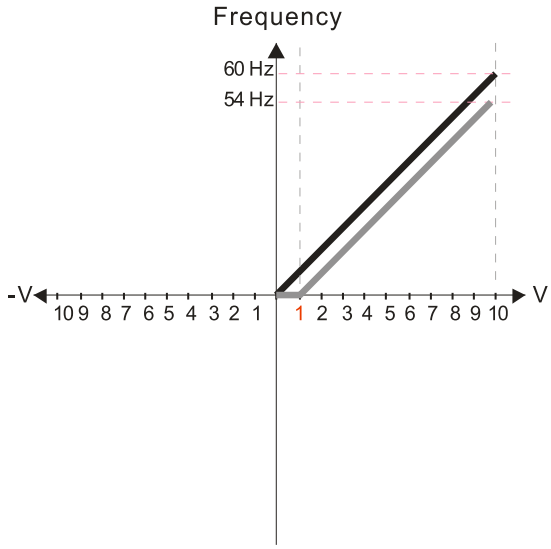

Pr.03-03=10%
Pr.03-07–03-08 (Positive/Negative Bias Mode)

0: No bias
1: Lower than or equal bias
2: Greater than or equal to bias
3: The absolute value of the bias voltage while serving as the center
4: Bias serves as the center

Pr.03-10 (Analog Frequency Command for Reverse Run)
0: Negative frequency is not valid.
Forward and reverse run is controlled by digital keyboard or external terminals.
1: Negative frequency is valid.
Positive frequency = forward run;
negative frequency = reverse run.
Direction can not be switched by digital keypad or external terminal control.

Pr.03-11 Analog input Gain (AVI) = 100%

Diagram 06

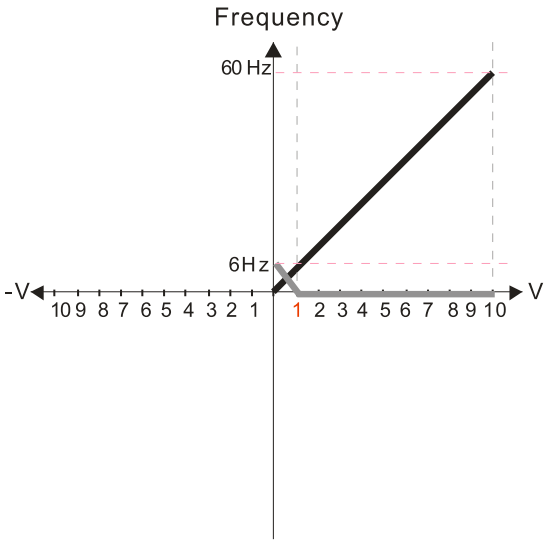

Pr.03-03=10%
Pr.03-07–03-08 (Positive/Negative Bias Mode)

0: No bias
1: Lower than or equal bias
2: Greater than or equal to bias
3: The absolute value of the bias voltage while serving as the center
4: Bias serves as the center

Pr.03-10 (Analog Frequency Command for Reverse Run)
0: Negative frequency is not valid.
Forward and reverse run is controlled by digital keyboard or external terminals.
1: Negative frequency is valid.
Positive frequency = forward run; negative frequency = reverse run.
Direction can not be switched by digital keypad or external terminal control.

Pr.03-11 Analog input Gain (AVI) = 100%

Diagram 07

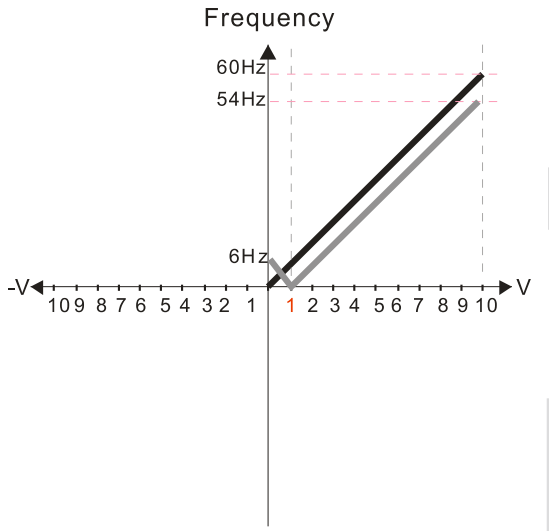

Pr.03-03=10%
Pr.03-07–03-08 (Positive/Negative Bias Mode)

0: No bias
1: Lower than or equal bias
2: Greater than or equal to bias
3: The absolute value of the bias voltage while serving as the center
4: Bias serves as the center

Pr.03-10 (Analog Frequency Command for Reverse Run)
0: Negative frequency is not valid.
Forward and reverse run is controlled by digital keyboard or external terminals.
1: Negative frequency is valid.
Positive frequency = forward run; negative frequency = reverse run.
Direction can not be switched by digital keypad or external terminal control.

Pr.03-11 Analog input Gain (AVI) = 100%

Diagram 08

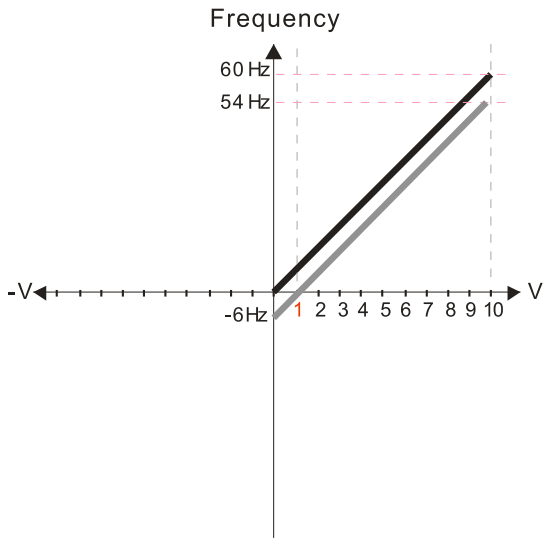

Pr.03-03=10%
Pr.03-07–03-08 (Positive/Negative Bias Mode)

0: No bias
1: Lower than or equal bias
2: Greater than or equal to bias
3: The absolute value of the bias voltage while serving as the center
4: Bias serves as the center

Pr.03-10 (Analog Frequency Command for Reverse Run)
0: Negative frequency is not valid.
Forward and reverse run is controlled by digital keyboard or external terminals.
1: Negative frequency is valid.
Positive frequency = forward run; negative frequency = reverse run.
Direction can not be switched by digital keypad or external terminal control.

Pr.03-11 Analog input Gain (AVI) = 100%

Diagram 09

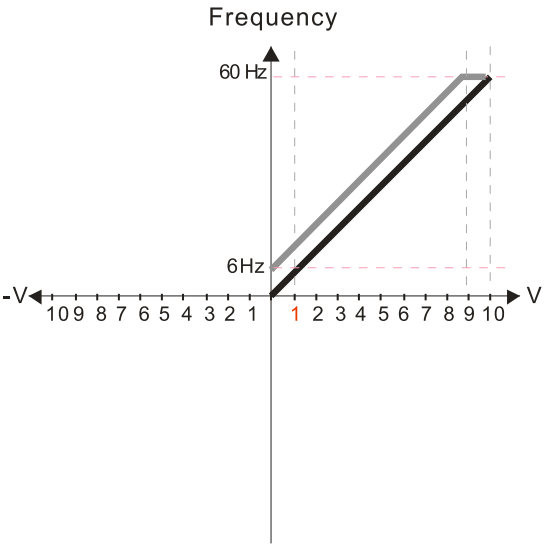

Pr.03-03=-10%
Pr.03-07–03-08 (Positive/Negative Bias Mode)

0: No bias
1: Lower than or equal bias
2: Greater than or equal to bias
3: The absolute value of the bias voltage while serving as the center
4: Bias serves as the center

Pr.03-10 (Analog Frequency Command for Reverse Run)
0: Negative frequency is not valid.
Forward and reverse run is controlled by digital keyboard or external terminals.
1: Negative frequency is valid.
Positive frequency = forward run;
negative frequency = reverse run.
Direction can not be switched by digital keypad or external terminal control.

Pr.03-11 Analog input Gain (AVI) = 100%

Diagram 10

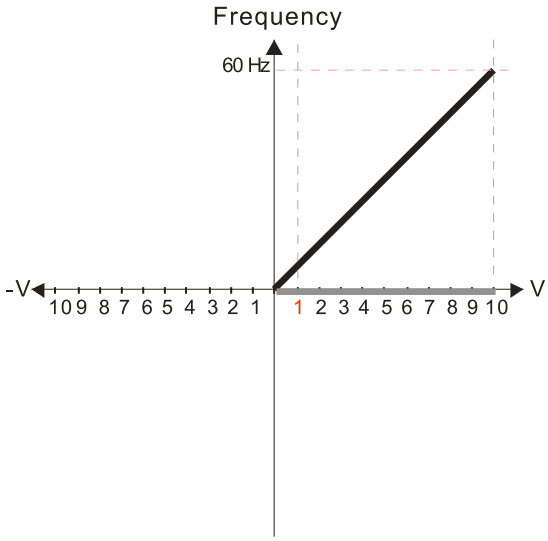

Pr.03-03=-10%
Pr.03-07–03-08 (Positive/Negative Bias Mode)

0: No bias
1: Lower than or equal bias
2: Greater than or equal to bias
3: The absolute value of the bias voltage while serving as the center
4: Bias serves as the center

Pr.03-10 (Analog Frequency Command for Reverse Run)
0: Negative frequency is not valid.
Forward and reverse run is controlled by digital keyboard or external terminals.
1: Negative frequency is valid.
Positive frequency = forward run;
negative frequency = reverse run.
Direction can not be switched by digital keypad or external terminal control.

Pr.03-11 Analog input Gain (AVI) = 100%

Diagram 11

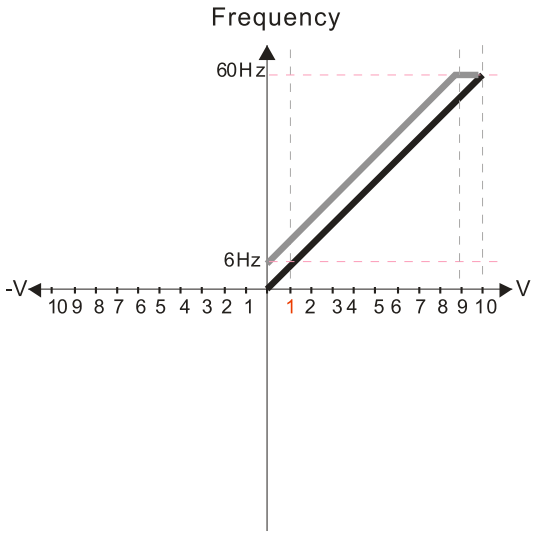

Pr.03-03=-10%
Pr.03-07–03-08 (Positive/Negative Bias Mode)

0: No bias
1: Lower than or equal bias
2: Greater than or equal to bias
3: The absolute value of the bias voltage while serving as the center
4: Bias serves as the center

Pr.03-10 (Analog Frequency Command for Reverse Run)
0: Negative frequency is not valid.
Forward and reverse run is controlled by digital keyboard or external terminals.
1: Negative frequency is valid.
Positive frequency = forward run;
negative frequency = reverse run.
Direction can not be switched by digital keypad or external terminal control.

Pr.03-11 Analog input Gain (AVI) = 100%

Diagram 12

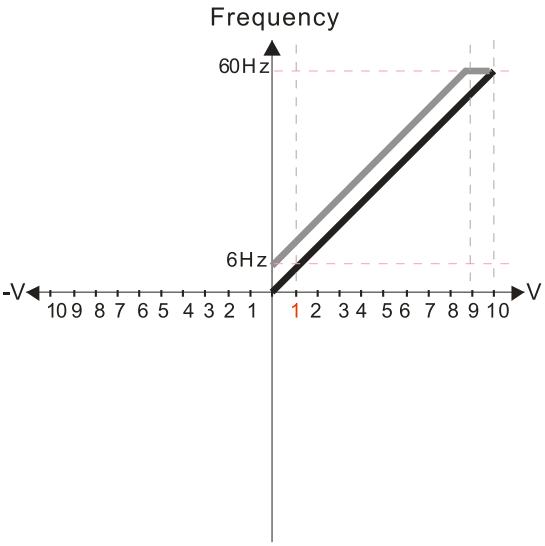

Pr.03-03=-10%
Pr.03-07–03-08 (Positive/Negative Bias Mode)

0: No bias
1: Lower than or equal bias
2: Greater than or equal to bias
3: The absolute value of the bias voltage while serving as the center
4: Bias serves as the center

Pr.03-10 (Analog Frequency Command for Reverse Run)
0: Negative frequency is not valid.
Forward and reverse run is controlled by digital keyboard or external terminals.
1: Negative frequency is valid.
Positive frequency = forward run; negative frequency = reverse run.
Direction can not be switched by digital keypad or external terminal control.

Pr.03-11 Analog input Gain (AVI) = 100%

Diagram 13

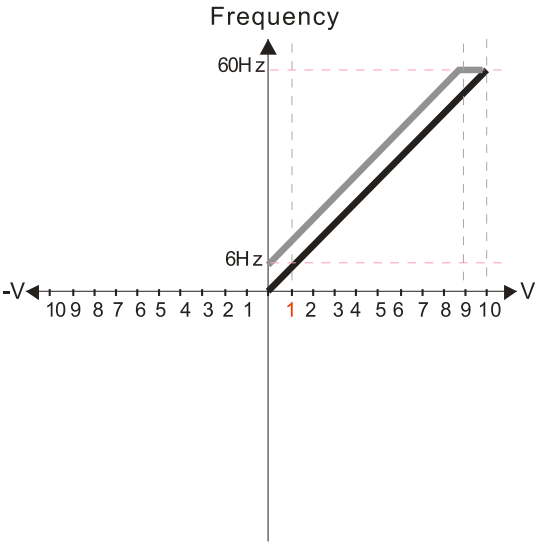

Pr.03-03=-10%
Pr.03-07–03-08 (Positive/Negative Bias Mode)

0: No bias
1: Lower than or equal bias
2: Greater than or equal to bias
3: The absolute value of the bias voltage while serving as the center
4: Bias serves as the center

Pr.03-10 (Analog Frequency Command for Reverse Run)
0: Negative frequency is not valid.
Forward and reverse run is controlled by digital keyboard or external terminals.
1: Negative frequency is valid.
Positive frequency = forward run; negative frequency = reverse run.
Direction can not be switched by digital keypad or external terminal control.

Pr.03-11 Analog input Gain (AVI) = 100%

Diagram 14

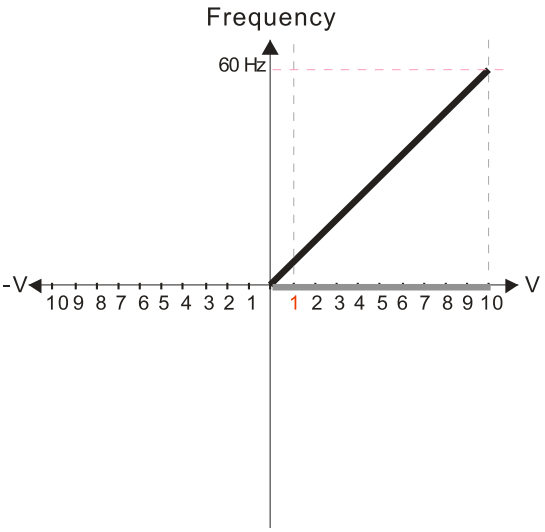

Pr.03-03=-10%
Pr.03-07–03-08 (Positive/Negative Bias Mode)

0: No bias
1: Lower than or equal bias
2: Greater than or equal to bias
3: The absolute value of the bias voltage while serving as the center
4: Bias serves as the center

Pr.03-10 (Analog Frequency Command for Reverse Run)
0: Negative frequency is not valid.
Forward and reverse run is controlled by digital keyboard or external terminals.
1: Negative frequency is valid.
Positive frequency = forward run; negative frequency = reverse run.
Direction can not be switched by digital keypad or external terminal control.

Pr.03-11 Analog input Gain (AVI) = 100%

Diagram 15

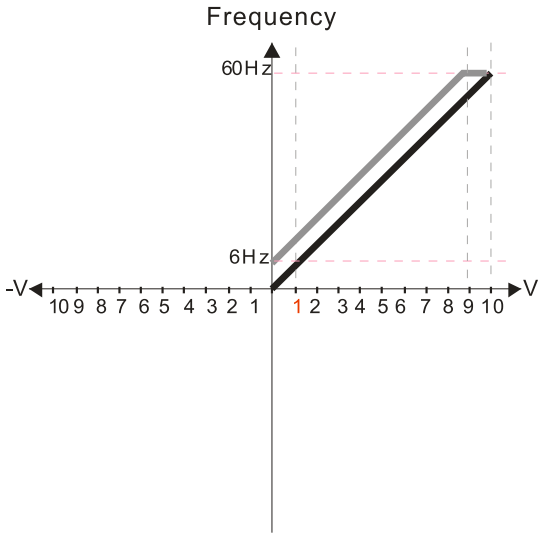

Pr.03-03=-10%
Pr.03-07–03-08 (Positive/Negative Bias Mode)

0: No bias
1: Lower than or equal bias
2: Greater than or equal to bias
3: The absolute value of the bias voltage while serving as the center
4: Bias serves as the center

Pr.03-10 (Analog Frequency Command for Reverse Run)
0: Negative frequency is not valid.
Forward and reverse run is controlled by digital keyboard or external terminals.
1: Negative frequency is valid.
Positive frequency = forward run; negative frequency = reverse run.
Direction can not be switched by digital keypad or external terminal control.

Pr.03-11 Analog input Gain (AVI) = 100%

Diagram 16

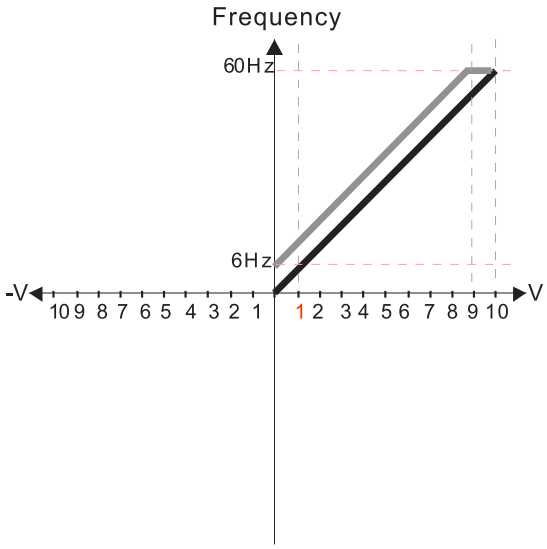

Pr.03-03=-10%
Pr.03-07–03-08 (Positive/Negative Bias Mode)

0: No bias
1: Lower than or equal bias
2: Greater than or equal to bias
3: The absolute value of the bias voltage while serving as the center
4: Bias serves as the center

Pr.03-10 (Analog Frequency Command for Reverse Run)
0: Negative frequency is not valid.
Forward and reverse run is controlled by digital keyboard or external terminals.
1: Negative frequency is valid.
Positive frequency = forward run; negative frequency = reverse run.
Direction can not be switched by digital keypad or external terminal control.

Pr.03-11 Analog input Gain (AVI) = 100%

Diagram 17

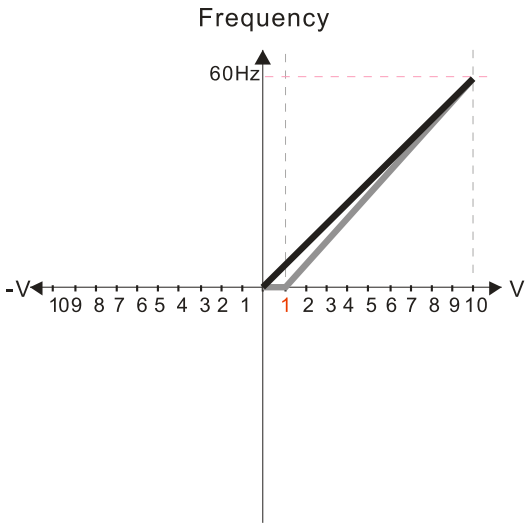

Pr.03-03=10%
Pr.03-07–03-08 (Positive/Negative Bias Mode)

0: No bias
1: Lower than or equal bias
2: Greater than or equal to bias
3: The absolute value of the bias voltage while serving as the center
4: Bias serves as the center

Pr.03-10 (Analog Frequency Command for Reverse Run)
0: Negative frequency is not valid.
Forward and reverse run is controlled by digital keyboard or external terminals.
1: Negative frequency is valid.
Positive frequency = forward run; negative frequency = reverse run.
Direction can not be switched by digital keypad or external terminal control.

Pr.03-11 Analog input Gain (AVI) = 111.1%
10/9 = 111.1%

Diagram 18

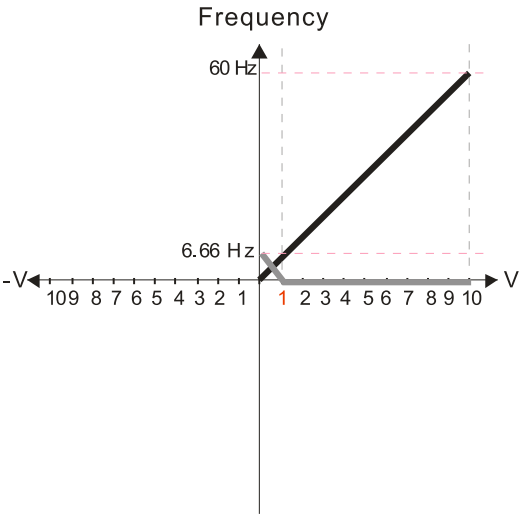

Pr.03-03=10%
Pr.03-07–03-08 (Positive/Negative Bias Mode)

0: No bias
1: Lower than or equal bias
2: Greater than or equal to bias
3: The absolute value of the bias voltage while serving as the center
4: Bias serves as the center

Pr.03-10 (Analog Frequency Command for Reverse Run)
0: Negative frequency is not valid.
Forward and reverse run is controlled by digital keyboard or external terminals.
1: Negative frequency is valid.
Positive frequency = forward run;
negative frequency = reverse run.
Direction can not be switched by digital keypad or external terminal control.

Pr.03-11 Analog input Gain (AVI) = 111.1%
10/9 = 111.1%

Diagram 19

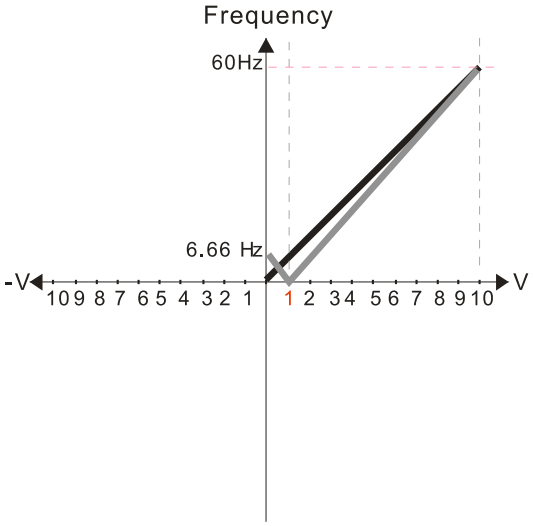

Pr.03-03=10%
Pr.03-07–03-08 (Positive/Negative Bias Mode)

0: No bias
1: Lower than or equal bias
2: Greater than or equal to bias
3: The absolute value of the bias voltage while serving as the center
4: Bias serves as the center

Pr.03-10 (Analog Frequency Command for Reverse Run)
0: Negative frequency is not valid.
Forward and reverse run is controlled by digital keyboard or external terminals.
1: Negative frequency is valid.
Positive frequency = forward run;
negative frequency = reverse run.
Direction can not be switched by digital keypad or external terminal control.

Pr.03-11 Analog input Gain (AVI) = 111.1%
10/9 = 111.1%

Diagram 20

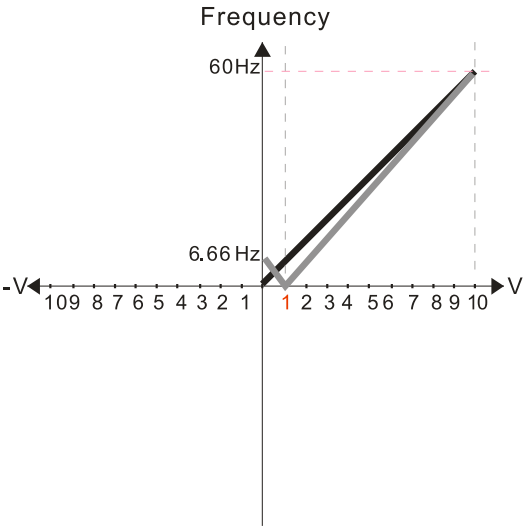

Pr.03-03=10%
Pr.03-07–03-08 (Positive/Negative Bias Mode)

0: No bias
1: Lower than or equal bias
2: Greater than or equal to bias
3: The absolute value of the bias voltage while serving as the center
4: Bias serves as the center

Pr.03-10 (Analog Frequency Command for Reverse Run)
0: Negative frequency is not valid.
Forward and reverse run is controlled by digital keyboard or external terminals.
1: Negative frequency is valid.
Positive frequency = forward run;
negative frequency = reverse run.
Direction can not be switched by digital keypad or external terminal control.

Pr.03-11 Analog input Gain (AVI) = 111.1%
10/9 = 111.1%

Diagram 21

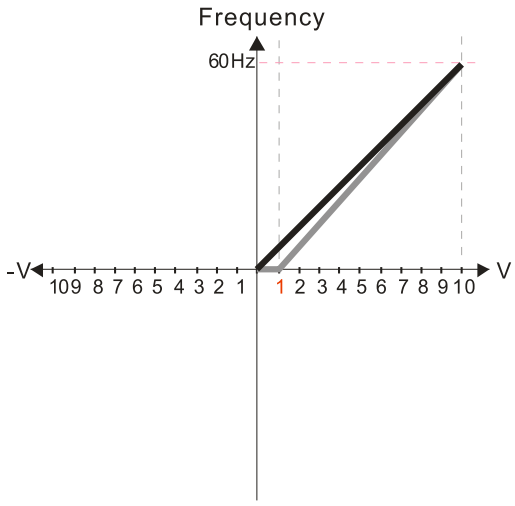

Pr.03-03=10%
Pr.03-07–03-08 (Positive/Negative Bias Mode)

0: No bias
1: Lower than or equal bias
2: Greater than or equal to bias
3: The absolute value of the bias voltage while serving as the center
4: Bias serves as the center

Pr.03-10 (Analog Frequency Command for Reverse Run)
0: Negative frequency is not valid.
Forward and reverse run is controlled by digital keyboard or external terminals.
1: Negative frequency is valid.
Positive frequency = forward run;
negative frequency = reverse run.
Direction can not be switched by digital keypad or external terminal control.

Pr.03-11 Analog input Gain (AVI) = 111.1%
10/9 = 111.1%

Diagram 22

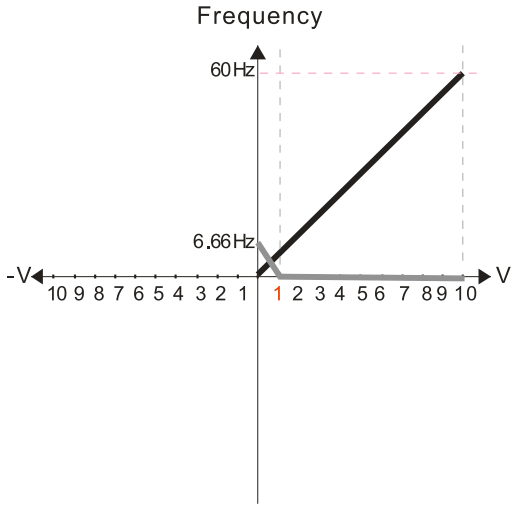

Pr.03-03=10%
Pr.03-07–03-08 (Positive/Negative Bias Mode)

0: No bias
1: Lower than or equal bias
2: Greater than or equal to bias
3: The absolute value of the bias voltage while serving as the center
4: Bias serves as the center

Pr.03-10 (Analog Frequency Command for Reverse Run)
0: Negative frequency is not valid.
Forward and reverse run is controlled by digital keyboard or external terminals.
1: Negative frequency is valid.
Positive frequency = forward run;
negative frequency = reverse run.
Direction can not be switched by digital keypad or external terminal control.

Pr.03-11 Analog input Gain (AVI) = 111.1%
10/9 = 111.1%

Diagram 23

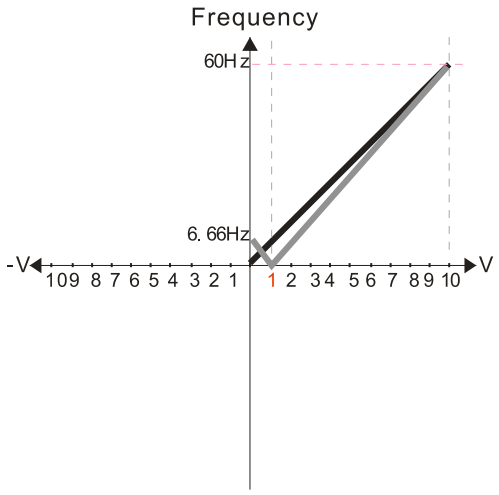

Pr.03-03=10%
Pr.03-07–03-08 (Positive/Negative Bias Mode)

0: No bias
1: Lower than or equal bias
2: Greater than or equal to bias
3: The absolute value of the bias voltage while serving as the center
4: Bias serves as the center

Pr.03-10 (Analog Frequency Command for Reverse Run)
0: Negative frequency is not valid.
Forward and reverse run is controlled by digital keyboard or external terminals.
1: Negative frequency is valid.
Positive frequency = forward run;
negative frequency = reverse run.
Direction can not be switched by digital keypad or external terminal control.

Pr.03-11 Analog input Gain (AVI) = 111.1%
10/9 = 111.1%

Diagram 24

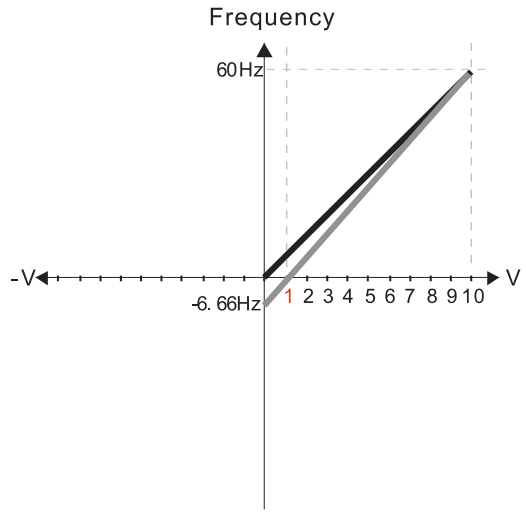

Pr.03-03=10%
Pr.03-07–03-08 (Positive/Negative Bias Mode)

0: No bias
1: Lower than or equal bias
2: Greater than or equal to bias
3: The absolute value of the bias voltage while serving as the center
4: Bias serves as the center

Pr.03-10 (Analog Frequency Command for Reverse Run)
0: Negative frequency is not valid.
Forward and reverse run is controlled by digital keyboard or external terminals.
1: Negative frequency is valid.
Positive frequency = forward run;
negative frequency = reverse run.
Direction can not be switched by digital keypad or external terminal control.

Pr.03-11 Analog input Gain (AVI) = 111.1%
10/9 = 111.1%

Diagram 25

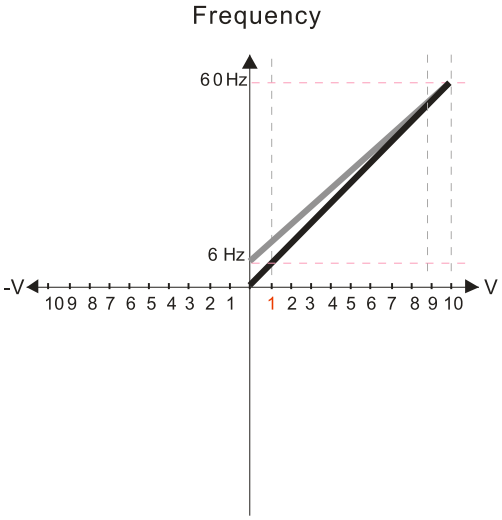

Pr.03-07–03-08 (Positive/Negative Bias Mode)

0: No bias
1: Lower than or equal bias
2: Greater than or equal to bias
3: The absolute value of the bias voltage while serving as the center
4: Bias serves as the center

Pr.03-10 (Analog Frequency Command for Reverse Run)
0: Negative frequency is not valid.
Forward and reverse run is controlled by digital keyboard or external terminals.
1: Negative frequency is valid.
Positive frequency = forward run;
negative frequency = reverse run.
Direction can not be switched by digital keypad or external terminal control.

Calculate the bias:

$$\frac{60-6\text{Hz}}{10\text{V}} = \frac{6-0\text{Hz}}{(0-X)\text{V}} \quad XV = \frac{100}{-9} = -1.11\text{V} \quad \therefore 03\text{-}03 = \frac{-1.11}{10} \times 100\%$$

$$= -11.1\ \%$$

Calculate the gain:

$$\text{Pr.03-11} = \frac{10\text{V}}{11.1\text{V}} \times 100\% = 90.0\ \%$$

Diagram 26

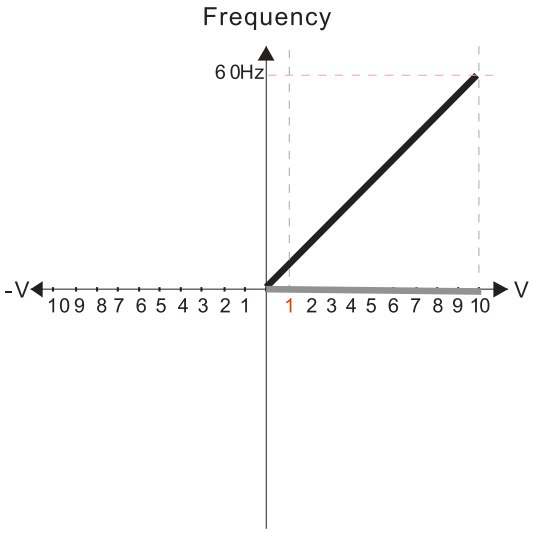

Pr.03-07–03-08 (Positive/Negative Bias Mode)

0: No bias
1: Lower than or equal bias
2: Greater than or equal to bias
3: The absolute value of the bias voltage while serving as the center
4: Bias serves as the center

Pr.03-10 (Analog Frequency Command for Reverse Run)
0: Negative frequency is not valid.
Forward and reverse run is controlled by digital keyboard or external terminals.
1: Negative frequency is valid.
Positive frequency = forward run;
negative frequency = reverse run.
Direction can not be switched by digital keypad or external terminal control.

Diagram 27

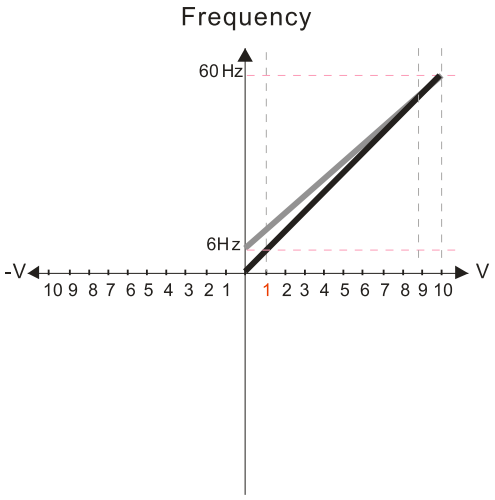

Pr.03-07–03-08 (Positive/Negative Bias Mode)

0: No bias
1: Lower than or equal bias
2: Greater than or equal to bias
3: The absolute value of the bias voltage while serving as the center
4: Bias serves as the center

Pr.03-10 (Analog Frequency Command for Reverse Run)

0: Negative frequency is not valid. Forward and reverse run is controlled by digital keyboard or external terminals.
1: Negative frequency is valid. Positive frequency = forward run; negative frequency = reverse run. Direction can not be switched by digital keypad or external terminal control.

Calculate the bias:

$$\frac{60-6Hz}{10V}=\frac{6-0Hz}{(0-XV)} \quad XV=\frac{100}{-9}=-1.11V \quad \therefore 03\text{-}03=\frac{-1.11}{10}\times 100\%$$

$$=-11.1\%$$

Calculate the gain:

$$Pr.03\text{-}11=\frac{10V}{11.1V}\times 100\%=90.0\%$$

Diagram 28

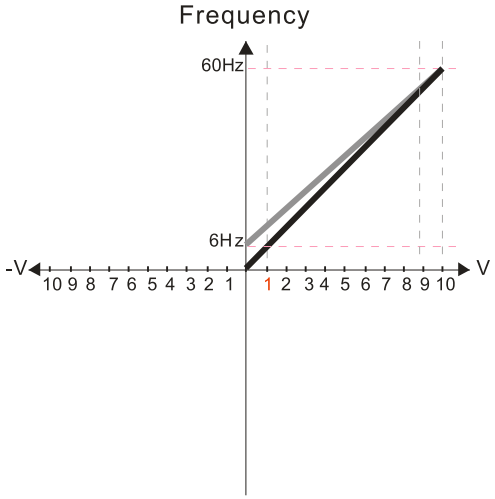

Pr.03-07–03-08 (Positive/Negative Bias Mode)

0: No bias
1: Lower than or equal bias
2: Greater than or equal to bias
3: The absolute value of the bias voltage while serving as the center
4: Bias serves as the center

Pr.03-10 (Analog Frequency Command for Reverse Run)

0: Negative frequency is not valid. Forward and reverse run is controlled by digital keyboard or external terminals.
1: Negative frequency is valid. Positive frequency = forward run; negative frequency = reverse run. Direction can not be switched by digital keypad or external terminal control.

Calculate the bias:

$$\frac{60-6Hz}{10V}=\frac{6-0Hz}{(0-XV)} \quad XV=\frac{100}{-9}=-1.11V \quad \therefore 03\text{-}03=\frac{-1.11}{10}\times 100\%$$

$$=-11.1\%$$

Calculate the gain:

$$Pr.03\text{-}11=\frac{10V}{11.1V}\times 100\%=90.0\%$$

Diagram 29

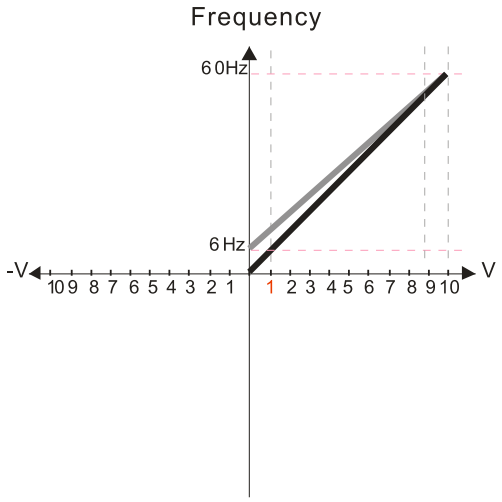

Pr.03-07–03-08 (Positive/Negative Bias Mode)

0: No bias
1: Lower than or equal bias
2: Greater than or equal to bias
3: The absolute value of the bias voltage while serving as the center
4: Bias serves as the center

Pr.03-10 (Analog Frequency Command for Reverse Run)
0: Negative frequency is not valid.
Forward and reverse run is controlled by digital keyboard or external terminals.
1: Negative frequency is valid.
Positive frequency = forward run;
negative frequency = reverse run.
Direction can not be switched by digital keypad or external terminal control.

Calculate the bias:

$$\frac{60-6\,Hz}{10V}=\frac{6-0\,Hz}{(0-XV)}\quad XV=\frac{100}{-9}=-1.11V\quad \therefore 03\text{-}03=\frac{-1.11}{10}\times 100\%$$

$$=-11.1\,\%$$

Calculate the gain:

$$Pr.03\text{-}11=\frac{10V}{11.1V}\times 100\%=90.0\,\%$$

Diagram 30

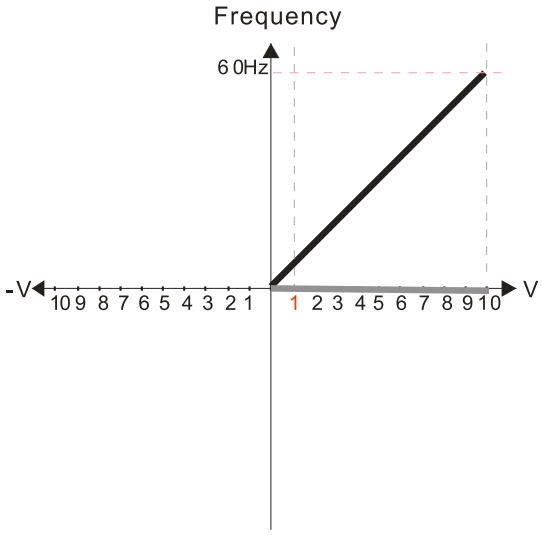

Pr.03-07–03-08 (Positive/Negative Bias Mode)

0: No bias
1: Lower than or equal bias
2: Greater than or equal to bias
3: The absolute value of the bias voltage while serving as the center
4: Bias serves as the center

Pr.03-10 (Analog Frequency Command for Reverse Run)
0: Negative frequency is not valid.
Forward and reverse run is controlled by digital keyboard or external terminals.
1: Negative frequency is valid.
Positive frequency = forward run;
negative frequency = reverse run.
Direction can not be switched by digital keypad or external terminal control.

Diagram 31

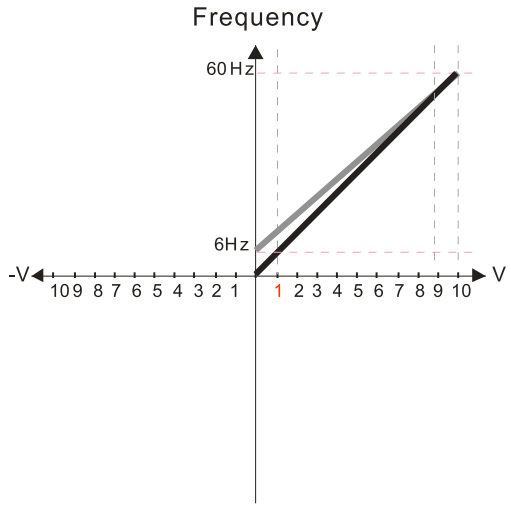

Pr.03-07–03-08 (Positive/Negative Bias Mode)

0: No bias
1: Lower than or equal bias
2: Greater than or equal to bias
3: The absolute value of the bias voltage while serving as the center
4: Bias serves as the center

Pr.03-10 (Analog Frequency Command for Reverse Run)
0: Negative frequency is not valid.
Forward and reverse run is controlled by digital keyboard or external terminals.
1: Negative frequency is valid.
Positive frequency = forward run;
negative frequency = reverse run.
Direction can not be switched by digital keypad or external terminal control.

Calculate the bias:

$$\frac{60-6\text{Hz}}{10\text{V}} = \frac{6-0\text{Hz}}{(0-XV)} \quad XV = \frac{100}{-9} = -1.11\text{V} \quad \therefore 03\text{-}03 = \frac{-1.11}{10} \times 100\% = -11.1\,\%$$

Calculate the gain:

$$\text{Pr.03-11} = \frac{10\text{V}}{11.1\text{V}} \times 100\% = 90.0\,\%$$

Diagram 32

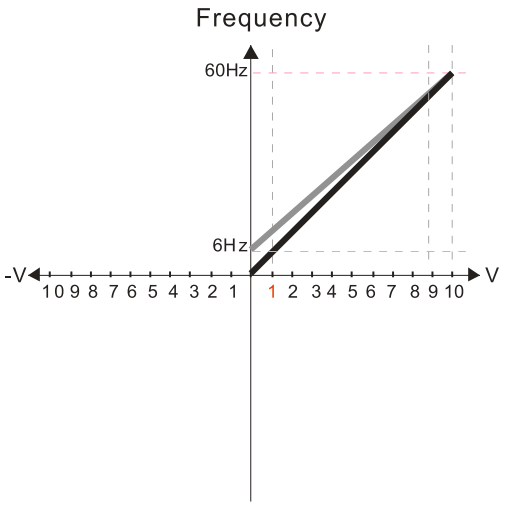

Pr.03-07–03-08 (Positive/Negative Bias Mode)

0: No bias
1: Lower than or equal bias
2: Greater than or equal to bias
3: The absolute value of the bias voltage while serving as the center
4: Bias serves as the center

Pr.03-10 (Analog Frequency Command for Reverse Run)
0: Negative frequency is not valid.
Forward and reverse run is controlled by digital keyboard or external terminals.
1: Negative frequency is valid.
Positive frequency = forward run;
negative frequency = reverse run.
Direction can not be switched by digital keypad or external terminal control.

Calculate the bias:

$$\frac{60-6\text{Hz}}{10\text{V}} = \frac{6-0\text{Hz}}{(0-XV)} \quad XV = \frac{100}{-9} = -1.11\text{V} \quad \therefore 03\text{-}03 = \frac{-1.11}{10} \times 100\% = -11.1\,\%$$

Calculate the gain:

$$\text{Pr.03-11} = \frac{10\text{V}}{11.1\text{V}} \times 100\% = 90.0\,\%$$

03-11 Analog Input Gain (AVI)
03-12 Analog Input Gain (ACI)

Default: 100.0

Settings -500.0–500.0%

Use Pr.03-03–03-12 when the Frequency command source is the analog voltage or current signal.

03-15 Analog Input Filter Time (AVI)
03-16 Analog Input Filter Time (ACI)

Default: 0.01

Settings 0.00–20.00 sec.

- Use these input delays to filter a noisy analog signal.
- When the time constant setting is too large, the control is stable but the control response is slow. When the time constant setting is too small, the control response is faster but the control may be unstable. For optimal setting, adjust the setting based on the control stability or the control response.

03-19 Signal Loss Selection for the Analog Input 4–20 mA

Default: 0

Settings 0: Disable
1: Continue operation at the last frequency
2: Decelerate to 0 Hz
3: Stop immediately and display “ACE”

- Determines the treatment when the 4–20 mA signal is lost, when ACIc (Pr.03-28 = 0).
- When Pr.03-28 ≠ 2, the voltage input to AVI terminal is 0–10 V or 0–20 mA, and Pr.03-19 is invalid.
- When the setting is 1 or 2, the keypad displays the warning code “ANL”. It keeps blinking until the ACI signal is recovered.
- When the motor drive stops, the warning condition does not continue to exist, so the warning disappears.

03-20 AFM Analog Output Selection

Default: 0

Settings 0–23

Function Chart

Settings	Functions	Descriptions
0	Output frequency (Hz)	Maximum frequency Pr.01-00 is processed as 100%.
1	Frequency command (Hz)	Maximum frequency Pr.01-00 is processed as 100%.
2	Motor speed (Hz)	Maximum frequency Pr.01-00 is processed as 100%.
3	Output current (rms)	(2.5 × rated current) is processed as 100%.
4	Output voltage	(2 × rated voltage) is processed as 100%.
5	DC bus voltage	450 V (900 V) = 100%
6	Power factor	-1.000–1.000 = 100%
7	Power	(2 × rated power) is processed as 100%.
9	AVI	0–10 V = 0–100%
12	Iq current command	(2.5 × rated current) is processed as 100%.
13	Iq feedback value	(2.5 × rated current) is processed as 100%.
14	Id current command	(2.5 × rated current) is processed as 100%.
15	Id feedback value	(2.5 × rated current) is processed as 100%.
16	Vq-axis voltage command	250 V (500 V) = 100%

Settings	Functions	Descriptions
17	Vd-axis voltage command	250 V (500 V) = 100%
21	RS-485 analog output	For RS-485 (InnerCOM / Modbus) control analog output Terminal: AFM, Corresponding address: 26A0H
23	Constant voltage output	Pr.03-32 controls the voltage output level. 0–100.00% of Pr.03-32 corresponds to 0–10 V of AFM.

03-21 AFM Analog Output Gain

Default: 100.0

Settings 0.0–500.0%

- Adjusts the voltage level outputted to the analog meter from the analog signal (Pr.03-20) output terminal AFM of the drive.

03-22 AFM Analog Output in REV Direction

Default: 0

Settings 0: Absolute value of output voltage
1: Reverse output 0 V; forward output 0–10 V
2: Reverse output 5–0 V; forward output 5–10 V

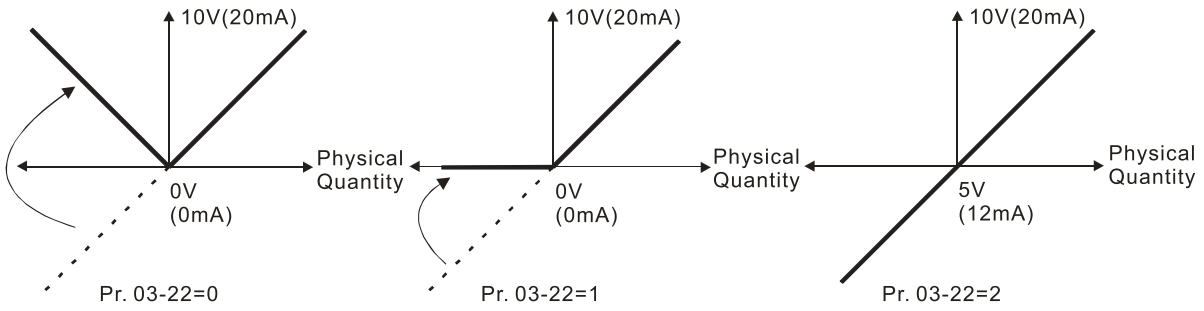

Selections for the analog output direction

03-27 AFM Output Bias

Default: 0.00

Settings -100.00–100.00%

- Example 1: AFM 0–10 V is set to the output frequency, the output equation is
  10 V × (output frequency / Pr.01-00) × Pr.03-21 + 10 V × Pr.03-27
- Example 2: AFM 0–20 mA is set to the output frequency, the output equation is
  20 mA × (output frequency / Pr.01-00) × Pr.03-21 + 20 mA × Pr.03-27
- Example 3: AFM 4–20 mA is set to the output frequency, the output equation is
  4 mA + 16 mA × (output frequency / Pr.01-00) × Pr.03-21 + 16 mA × Pr.03-27
- This parameter sets the corresponding voltage for the analog output 0.

03-28 AI Terminal Input Selection

Default: 0

Settings 0: 0–10 V (Pr.03-63–03-68 is valid)
1: 0–20 mA (Pr.03-57–03-62 is valid)
2: 4–20 mA (Pr.03-57–03-62 is valid)

📖 Switch between voltage mode and current mode must work with manual switch. Refer to Chapter 06 for more information on AVI terminals.

📖 When you change the setting, proportion to the corresponding AI will change to default.

03-32 AFM DC Output Setting Level

Default: 0.00

Settings 0.00–100.00%

03-35 AFM Output Filter Time

Default: 0.01

Settings 0.00–20.00 sec.

03-39 VR Input Selection

Default: 1

Settings 0: Disable
1: Frequency command

📖 VR is the abbreviation for Variable Resistor; it is the potentiometer of the keyboard panel.

03-40 VR Input Bias

Default: 0.0

Settings -100.0–100.0%

03-41 VR Positive / Negative Bias

Default: 0

Settings 0: No bias
1: Lower than or equal to bias
2: Greater than or equal to bias
3: The absolute value of the bias voltage while serving as the center
4: Bias serves as the center

03-42 VR Gain

Default: 100.0

Settings -500.0–500.0%

03-43 VR Filter Time

Default: 0.01

Settings 0.00–2.00 sec.

03-44 Multi-function MO Output by AI Level Source

Default: 0

Settings 0: AVI
1: ACI

03-45 AI Level 1 (upper limit)

Default: 50

Settings -100–100%

03-46 AI Level 2 (lower limit)

Default: 10

Settings -100–100%

- Multi-function output terminal 67 must work with Pr.03-44 to select input channels. When analog input level is higher than Pr.03-45, multi-function output acts; when analog input level is lower than Pr.03-46, multi-function output terminals stop outputting.
- When setting levels, AI upper level must be higher than AI lower level.

03-50 Analog Input Curve Selection

Default: 0

Settings 0: Normal Curve
1: Three-point curve of AVI (& AI10)
2: Three-point curve of ACI (& AI11)

03-57 ACI Lowest Point

Default: 4.00

Settings Pr.03-28 = 1, 0.00–10.00 mA
Pr.03-28 ≠ 1, 0.00–20.00 mA

03-58 ACI Proportional Lowest Point

Default: 0.00

Settings 0.00–100.00%

03-59 ACI Mid-point

Default: 12.00

Settings Pr.03-28 = 1, 0.00–10.00 mA
Pr.03-28 ≠ 1, 0.00–20.00 mA

03-60 ACI Proportional Mid-point

Default: 50.00

Settings 0.00–100.00%

03-61 ACI Highest Point

Default: 20.00

Settings Pr.03-28 = 1, 0.00–10.00 mA
Pr.03-28 ≠ 1, 0.00–20.00 mA

03-62 ACI Proportional Highest Point

Default: 100.00

Settings Pr.03-28 ≠ 1, 0.00–100.00%

- When Pr.03-28 ≠ 1, the ACI setting is 0–20 mA or 4–20 mA and the unit is current (mA).
- When you set the analog input ACI to the Frequency command, 100% corresponds to Fmax (Pr.01-00 Maximum Operation Frequency).
- The output % becomes 0% when the ACI input value is lower than lowest point setting.
  For example:

If Pr.03-57 = 2 mA; Pr.03-58 = 10%, then the output becomes 0% when the AVI input is ≤ 2 mA. If the ACI input swings between 2 mA and 2.1 mA, the drive's output frequency oscillates between 0% and 10%.

03-63 AVI Voltage Lowest Point

Default: 0.00

Settings 0.00–10.00 V

03-64 AVI Proportional Lowest Point

Default: 0.00

Settings -100.00–100.00%

03-65 AVI Voltage Mid-point

Default: 5.00

Settings 0.00–10.00 V

03-66 AVI Proportional Mid-point

Default: 50.00

Settings -100.00–100.00%

03-67 AVI Voltage Highest Point

Default: 10.00

Settings 0.00–10.00 V

03-68 AVI Proportional Highest Point

Default: 100.00

Settings -100.00–100.00%

- When you set the positive voltage AVI to the Frequency command, 100% corresponds to Fmax (Pr.01-00 Maximum Operation Frequency) and the motor runs in the forward direction.
- The requirement for these three parameters (Pr.03-63, Pr.03-65 and Pr.03-67) is Pr.03-63 < Pr.03-65 < Pr.03-67. The values for three proportional points (Pr.03-64, Pr.03-66 and Pr.03-68) have no limits. There is a linear calculation between two points.
- The output % becomes 0% when the positive voltage AVI input value is lower than lowest point setting.

  For example:

  If Pr.03-63 = 1 V; Pr.03-64 = 10%, then the output becomes 0% when the AVI input is ≤ 1 V.

  If the AVI input swings between 1 V and 1.1 V, the drive's output frequency oscillates between 0% and 10%.

04 Multi-step Speed Parameters

You can set this parameter during operation.

04-00	1st Step Speed Frequency
04-01	2nd Step Speed Frequency
04-02	3rd Step Speed Frequency
04-03	4th Step Speed Frequency
04-04	5th Step Speed Frequency
04-05	6th Step Speed Frequency
04-06	7th Step Speed Frequency
04-07	8th Step Speed Frequency
04-08	9th Step Speed Frequency
04-09	10th Step Speed Frequency
04-10	11th Step Speed Frequency
04-11	12th Step Speed Frequency
04-12	13th Step Speed Frequency
04-13	14th Step Speed Frequency
04-14	15th Step Speed Frequency

Default: 0.00

Settings 0.00–599.00 Hz

- Use the multi-function input terminals (refer to settings 1–4 of Pr.02-01–02-05 Multi-function Input Command) to select the multi-step speed command (the maximum is 15th step speed). Pr.04-00 to 04-14 sets the multi-step speed frequency as shown in the following diagram.
- The external terminal / digital keypad / communication controls the RUN and STOP commands with Pr.00-21.
- You can set each multi-step speed between 0.00–599.00 Hz during operation.
- Explanation for the timing diagram of the multi-step speed and external terminals
  The related parameter settings are:
  1. Pr.04-00–04-14: sets the 1st–15th multi-step speed (to set the frequency of each step speed).
  2. Pr.02-01–02-05: sets the multi-function input terminals (multi-step speed command 1–4).
- Related parameters:
  - Pr.01-22 JOG frequency setting
  - Pr.02-01 multi-function input command 1 (MI1)
  - Pr.02-02 multi-function input command 2 (MI2)
  - Pr.02-03 multi-function input command 3 (MI3)
  - Pr.02-04 multi-function input command 4 (MI4)
  - Pr.02-05 multi-function input command 4 (MI5)

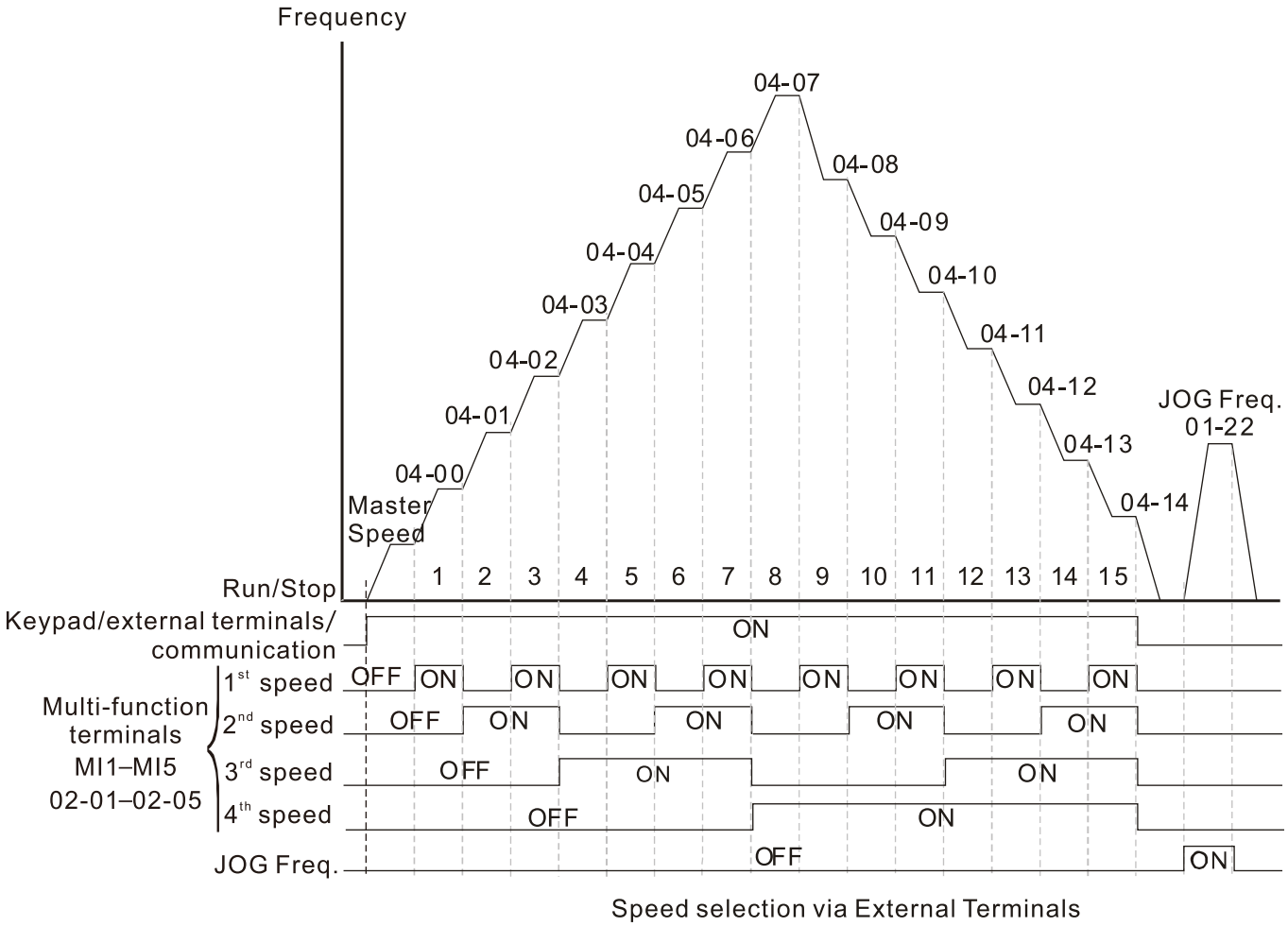

04-68 Flying Catch Retry Time

Default: 0

Settings 0 – 65535 sec.

During the speed tracking, the motor drive free runs when DC bus voltage reaches OV stall level, and it will do flying catch again after Pr.04-68 setting time.

04-69 Magnetization Time

Default: 0

Settings 0–65535

Tune Pr.04-69 according to different motors to increase the detection accuracy of initial angle for a better flying catch performance.

05 Motor Parameters

You can set this parameter during operation.

05-00 Motor Parameter Auto-Tuning

Default: 0

Settings 0: No function
1: Dynamic test for induction motor (IM)
2: Static test for induction motor (IM)
13: High frequency stall test for PM synchronous motor

05-01 Full-load Current for Induction Motor 1 (A)

Default: Depending on the model power

Settings 10–120 % of the drive's rated current

Sets this value according to the rated current of the motor as indicated on the motor nameplate. The default is 90% of the drive's rated current.

Example: The rated current for a 7.5 HP (5.5 kW) motor is 25 A. The default is 22.5 A. The setting range is 2.5–30 A. (25 × 10 % = 2.5 A and 25 × 120 % = 30 A).

05-02 Rated Power for Induction Motor 1 (kW)

Default: Depending on the model power

Settings 0–655.35 kW

Sets the rated power for motor 1. The default is the drive's power value.

05-03 Rated Speed for Induction Motor 1 (rpm)

Default: Depending on the motor's number of poles

Settings 0–xxxxx rpm (Depending on the motor's number of poles)
1710 (60 Hz 4 poles); 1410 (50 Hz 4 poles)

Sets the rated speed for the motor as indicated on the motor nameplate.

05-04 Number of Poles for Induction Motor 1

Default: 4

Settings 2–20

Sets the number of poles for the motor (must be an even number).

Set up Pr.01-01 and Pr.05-03 before setting up Pr.05-04 to make sure the motor operates normally.

05-05 No-load Current for Induction Motor 1 (A)

Default: Depending on the model power

Settings 0.00–Pr.05-01 default

The default is 40% of the motor's rated current.

05-06 Stator Resistance (Rs) for Induction Motor 1

Default: Depending on the model power

05-07 Rotor Resistance (Rr) for Induction Motor 1

Default: 0.000

Settings 0.000–65.535 Ω

05-08 Magnetizing Inductance (Lm) for Induction Motor 1

05-09 Stator Inductance (Lx) for Induction Motor 1

Default: 0.0

Settings 0.0–6553.5 mH

05-13 Full-load Current for Induction Motor 2 (A)

Default: Depending on the model power

Settings 10–120% of the drive's rated current

📖 Set this value according to the rated current of the motor as indicated on the motor nameplate. The default is 90% of the drive's rated current.

Example: The rated current for a 7.5 HP (5.5 kW) motor is 25 A. The default is 22.5 A. The setting range is 2.5–30 A. (25 × 10 % = 2.5 A and 25 × 120 % = 30 A)

05-14 Rated Power for Induction Motor 2 (kW)

Default: Depending on the model power

Settings 0.00–655.35 kW

📖 Sets the rated power for motor 2. The default is the drive's power value.

05-15 Rated Speed for Induction Motor 2 (rpm)

Default: Depending on the motor's number of poles

Settings 0–xxxxx rpm (Depending on the motor's number of poles)
1710 (60 Hz 4 poles); 1410 (50 Hz 4 poles)

📖 Sets the rated speed for the motor as indicated on the motor nameplate.

05-16 Number of Poles for Induction Motor 2

Default: 4

Settings 2–20

📖 Sets the number of poles for the motor (must be an even number).

📖 Set up Pr.01-35 and Pr.05-15 before setting up Pr.05-04 to make sure the motor operates normally.

05-17 No-load Current for Induction Motor 2 (A)

Default: Depending on the model power

Settings 0.00–Pr.05-13 default

📖 The default is 40% of the motors rated current.

05-18 Stator Resistance (Rs) for Induction Motor 2

Default: Depending on the model power

05-19 Rotor Resistance (Rr) for Induction Motor 2

Default: 0.000

Settings 0.000–65.535 Ω

05-20 Magnetizing Inductance (Lm) for Induction Motor 2

05-21 Stator Inductance (Lx) for Induction Motor 2

Default: 0.0

Settings 0.0–6553.5 mH

05-22 Multi-motors (Induction) Selection

Default: 1

Settings 1: Motor 1
2: Motor 2

📖 Sets the motor operated by the AC motor drive. Multi-motors selection only supports single control mode. For example, when you set motor 1 as SVC control mode, the control mode of motor 2 is also set as SVC.

05-23 Frequency for Y-connection / Δ-connection Switch for an Induction Motor

Default: 60.00

Settings 0.00–599.00 Hz

05-24 Y-connection / Δ-connection Switch for an Induction Motor

Default: 0

Settings 0: Disable
1: Enable

05-25 Delay Time for Y-connection / Δ-connection Switch for an Induction Motor

Default: 0.200

Settings 0.000–60.000 sec.

📖 You can apply Pr.05-23–Pr.05-25 in a wide range of motors, and the motor coil executes the Y-connection / Δ-connection switch as required. The wide range motors are related to the motor design. In general, the motor has higher torque with low speed Y-connection and has higher speed with high speed Δ-connection

📖 Pr.05-24 enables and disables the switch of Y-connection / Δ-connection.

📖 When you set Pr.05-24 as 1, the drive uses the Pr.05-23 setting and current motor frequency, and switches the current motor to Y-connection or Δ-connection. You can switch the relevant motor parameter settings simultaneously.

📖 Pr.05-25 sets the switch delay time of Y-connection / Δ-connection.

📖 When the output frequency reaches the Y-connection / Δ-connection switch frequency, the drive delays according to Pr.05-25 before activating the multi-function output terminals.

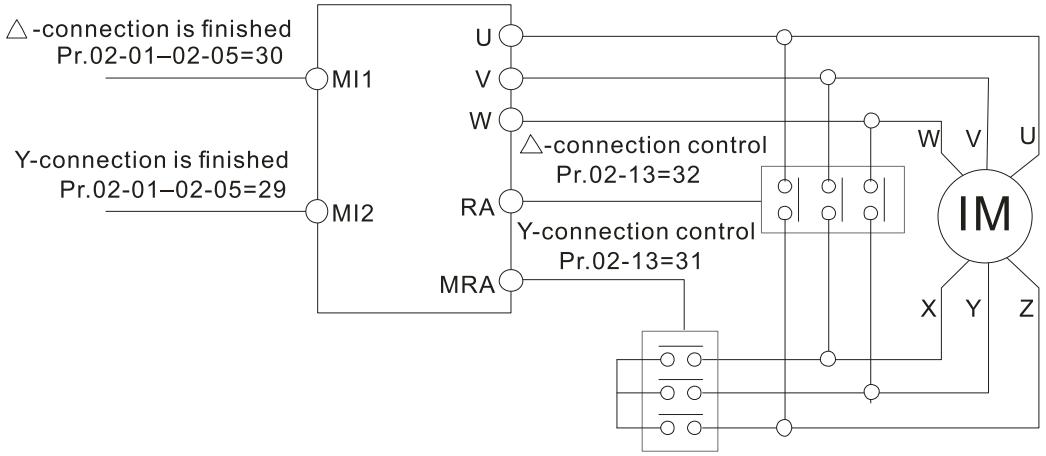

Y- △connection switch: can be used for wide range motors.
Y-connection for low speed: higher torque can be used for rigid tapping.
△-connection for high speed: higher torque can be used for high-speed drilling.

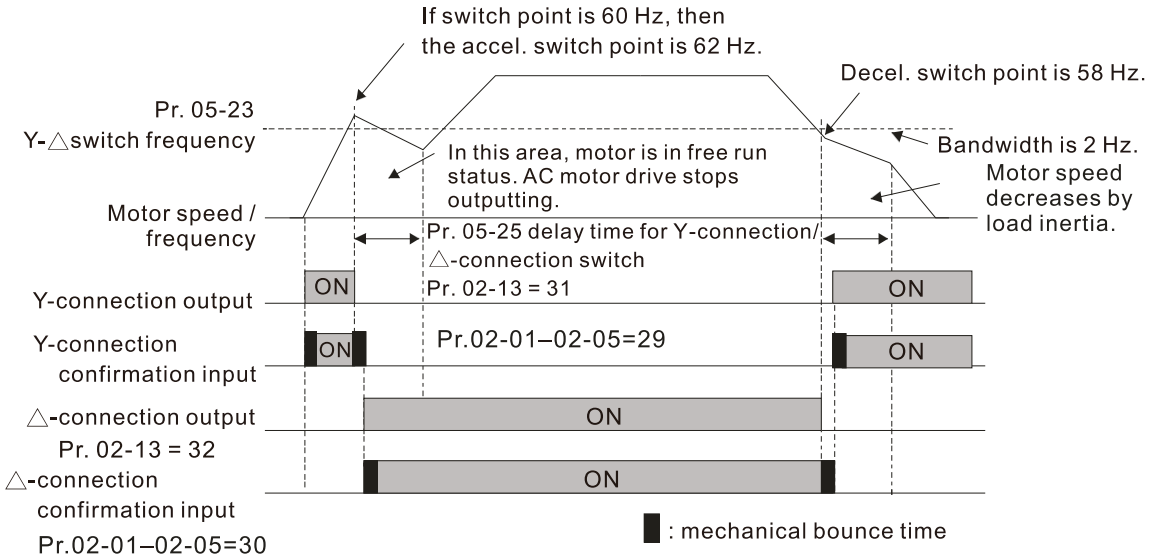

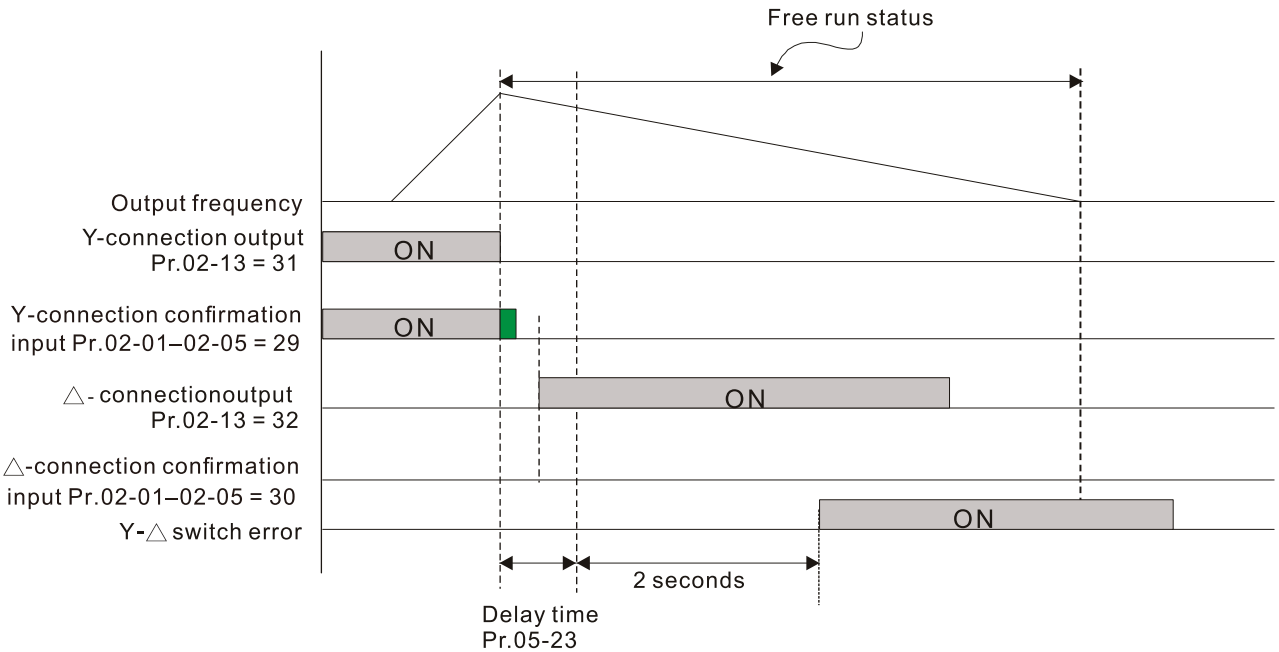

05-26	Accumulated Watt-second for a Motor in Low Word (W-msec.)
05-27	Accumulated Watt-second for a Motor in High Word (W-sec.)
05-28	Accumulated Watt-hour for a Motor (W-hour)
05-29	Accumulated Watt-hour for a Motor in Low Word (kW-hour)
05-30	Accumulated Watt-hour for a Motor in High Word (MW-hour)

Default: 0.0

Settings Read only

📖 Pr.05-26–05-30 records the amount of power the motors consume. The accumulation begins when the drive is activated and the record is saved when the drive stops or turns OFF. The amount of consumed watts continues to accumulate when the drive is activated again. To clear the accumulation, set Pr.00-02 as 5 to return the accumulation record to 0.

📖 The accumulated total watts of the motor per second = Pr.05-27 x 65536 + Pr.05-26
Example: when Pr.05-26 = 2548.1 and Pr.05-27 = 15.2, the accumulated total watts of the motor per second = 15.2 x 65536 + 2548.1 = 996147.2 + 2548.1 = 998695.3 kWh

📖 The accumulated total kilowatts of the motor per hour = Pr.05-30 x 1000000 + Pr.05-29 x 1000 + Pr.05-28 Wh
Example: when Pr.05-30 = 76 MWh and Pr.05-29 = 150 kWh, Pr.05-28 = 400 Wh (or 0.4 kWh), the accumulated total kilowatts of the motor per hour = 76 x 1000000 + 150 x 1000 + 40 = 76150400 Wh = 76150.4 kWh

05-31 Accumulated Motor Operation Time (Min.)

Default: 0

Settings 0–1439

05-32 Accumulated Motor Operation Time (Day)

Default: 0

Settings 0–65535

📖 Use Pr.05-31 and Pr.05-32 to record the motor operation time. To clear the operation time, set Pr.05-31 and Pr.05-32 as 00. An operation time shorter than 60 seconds is not recorded.

05-33 Induction Motor (IM) or Permanent Magnet Synchronous AC Motor (PM) Selection

Default: 0

Settings 0: Induction Motor
1: SPM
2: IPM

05-34 Full-load Current for a Permanent Magnet Synchronous AC Motor

Default: Depending on the model power

Settings 0–120% of the drive's rated current

05-35 Rated Power for a Permanent Magnet Synchronous AC Motor

Default: Depending on the motor power

Settings 0.00–655.35 kW

📖 Sets the rated power for the permanent magnet synchronous motor. The default is the drive's power value.

05-36 Rated Speed for a Permanent Magnet Synchronous AC Motor

Default: 2000

Settings 0–65535 rpm

05-37 Number of Poles for a Permanent Magnet Synchronous AC Motor

Default: 10

Settings 0–65535

05-39 Stator Resistance for a Permanent Magnet Synchronous AC Motor

Default: 0.000

Settings 0.000–65.535 Ω

05-40 Permanent Magnet Synchronous AC Motor Ld

Default: 0.00

Settings 0.00–655.35 mH

05-41 Permanent Magnet Synchronous AC Motor Lq

Default: 0.00

Settings 0.00–655.35 mH

05-43 Ke parameter for a Permanent Magnet Synchronous AC Motor

Default: 0

Settings 0–65535 V/krpm

06 Protection Parameters (1)

You can set this parameter during operation.

06-00 Low Voltage Level

Default: 180.0 / 360.0

Settings 115V / 230V models: 150.0–220.0 V_{DC}
460V models: 300.0–440.0 V_{DC}

- Sets the Low Voltage (LV) level. When the DC bus voltage is lower than Pr.06-00, the drive stops output and the motor free runs to a stop.
- If the LV fault is triggered during operation, the drive stops output and the motor free runs to a stop. There are three LV faults, LvA (LV during acceleration), Lvd (LV during deceleration), and Lvn (LV in constant speed) that are triggered according to the status of acceleration or deceleration. You must press RESET to clear the LV fault. The drive automatically restarts if you set to restart after momentary power loss (refer to Pr.07-06 Restart after Momentary Power Loss and Pr.07-07 Allowed Power Loss Duration for details).
- If the LV fault is triggered when the drive is in STOP status, the drive displays LvS (LV during stop), which is not recorded, and the drive restarts automatically when the input voltage is higher than the LV level of 30 V (230V series) or 60 V (460V series).

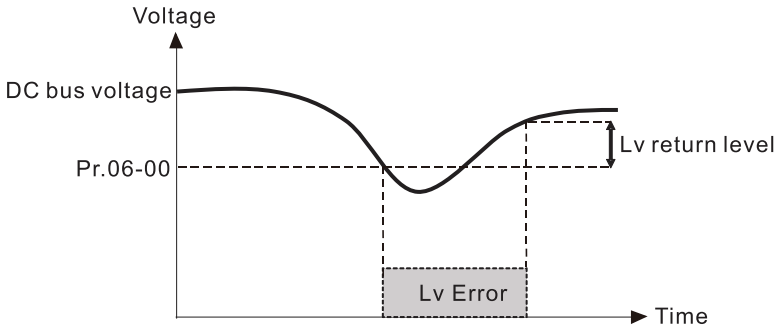

06-01 Over-voltage Stall Prevention

Default: 380.0 / 760.0

Settings 0: Disabled
115V / 230V models: 0.0–450.0 V_{DC}
460V models: 0.0–900.0 V_{DC}

- Setting Pr.06-01 to 0.0 disables the over-voltage stall prevention function (connected with braking unit or braking resistor). Use this setting when braking units or resistors are connected to the drive.
- Setting Pr.06-01 to a value > 0 enables the over-voltage stall prevention. This setting refers to the power supply system and loading. If the setting is too low, then over-voltage stall prevention is easily activated, which may increase deceleration time.
- Related parameters:
  Pr.01-13, Pr.01-15, Pr.01-17, Pr.01-19 Deceleration Time 1–4, Pr.02-13 Multi-function Output 1 (Relay 1), Pr.02-16 Multi-function Output 2 (MO1), and Pr.06-02 Selection for Over-voltage Stall Prevention.
- When setting value exceeds the OV level (as shown in the table below), the OV stall function is deemed to be disabled.

Voltage	OV Stall	OV	Setting Range
230V models	380 V_{DC}	410 V_{DC}	0~450 V_{DC}
460V models	760 V_{DC}	820 V_{DC}	0~900 V_{DC}

06-02 Selection for Over-voltage Stall Prevention

Default: 0

Settings 0: Traditional over-voltage stall prevention
1: Smart over-voltage stall prevention

Use this function when you are unsure about the load inertia. When stopping under normal load, the over-voltage does not occur during deceleration and meet the deceleration time setting. Sometimes it may not stop due to over-voltage during decelerating to STOP when the load regenerative inertia increases. In this case, the AC motor drive extends the deceleration time automatically until the drive stops.

When you set Pr.06-02 to 0, during deceleration the motor exceeds the synchronous speed due to load inertia. In this case, the motor becomes an electrical generator. The DC bus voltage may exceed its maximum allowable value due to motor regeneration in some situations, such as loading inertia being too high or deceleration time being set too short. When you enable traditional over-voltage stall prevention and the DC bus voltage detected is too high, the drive stops decelerating (output frequency remains unchanged) until the DC bus voltage drops below the setting value.

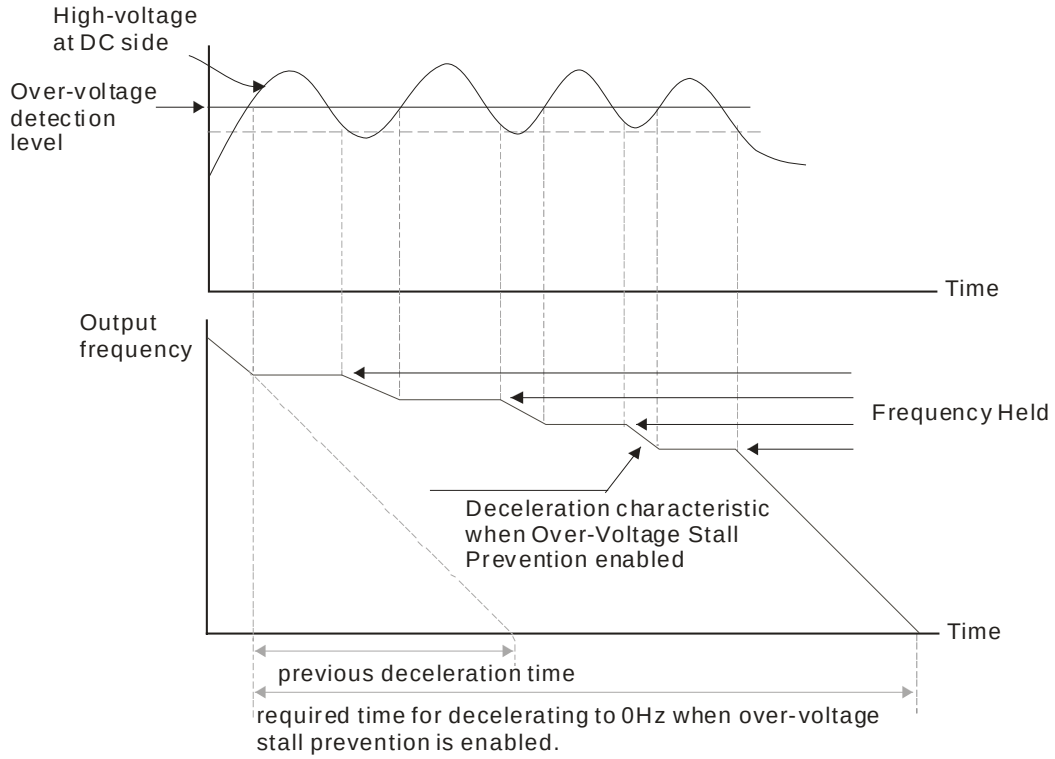

When you set Pr.06-02 to 1, to use smart over-voltage stall prevention during deceleration, the drive maintains the DC bus voltage when decelerating and prevents the drive from OV.

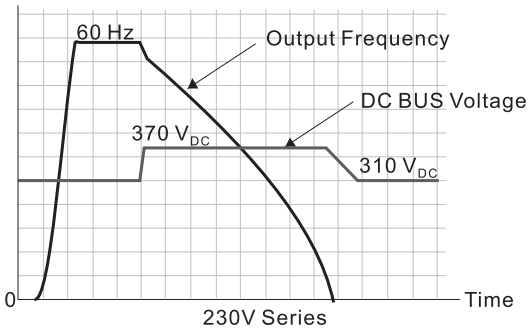

- When you enable the over-voltage stall prevention, the drive's deceleration time is longer than the setting. If you encounter any problem with deceleration time, refer to the following guides for troubleshooting.
  1. Increase the deceleration time to a suitable value.
  2. Install a brake resistor (refer to Section 7-1 All Brake Resistors and Brake Units Used in AC Motor Drives for details) to dissipate the electrical energy that is generated from the motor.
- Related parameters:
  Pr.01-13, Pr.01-15, Pr.01-17, Pr.01-19 Deceleration Time 1–4, Pr.02-13 Multi-function Output 1 (Relay 1), Pr.02-16 Multi-function Output 2 (MO1), and Pr.06-01 Over-voltage Stall Prevention.

06-03 Over-current Stall Prevention during Acceleration

Default: 120 / 180

Settings Normal Load: 0–150% (100% corresponds to the rated current of the drive)
Heavy Load: 0–200% (100% corresponds to the rated current of the drive)

- If the motor load is too large or the drive's acceleration time is too short, the output current of the drive may be too high during acceleration, and it may cause motor damage or trigger protection functions (OL or OC). Use this parameter to prevent these situations.
- During acceleration, the output current of the drive may increase abruptly and exceed the setting value of Pr.06-03. In this case, the drive stops accelerating and keeps the output frequency constant, and then continues to accelerate until the output current decreases.

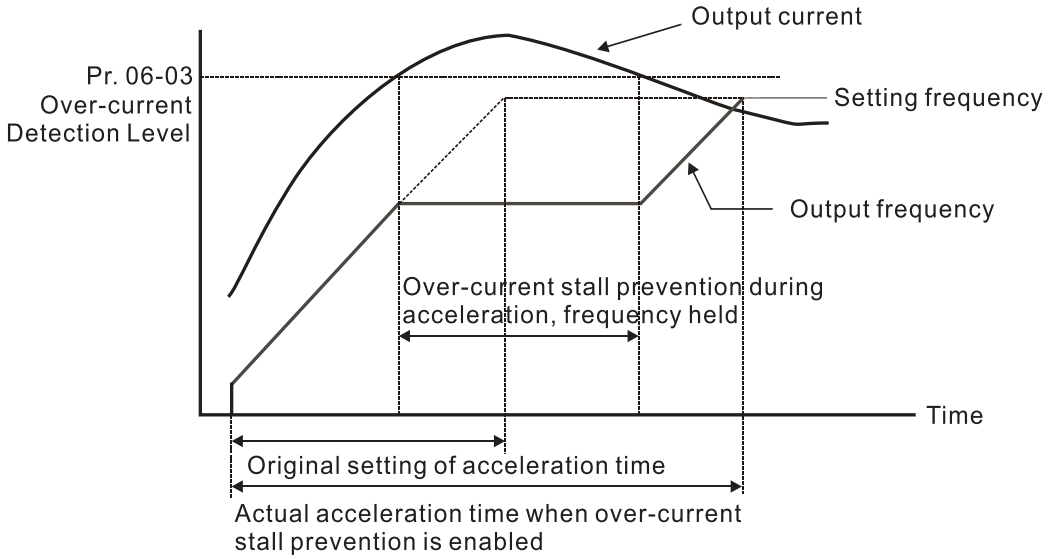

- Refer to Pr.06-16 for the stall level in flux weakening region. The protection curve:

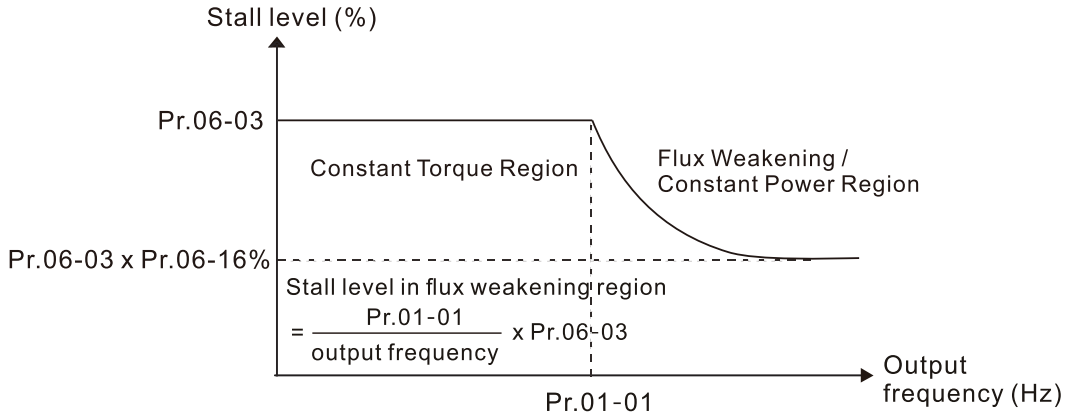

- When you enable the over-current stall prevention, the drive's acceleration time is longer than the setting.
- When the over-current stall prevention occurs because the motor capacity is too small or operates in the default, decrease the Pr.06-03 setting value.
- When you encounter any problem with the acceleration time, refer to the following guides for troubleshooting.
  1. Increase the deceleration time to a suitable value.
  2. Set Pr.01-44 Auto-Acceleration and Auto-Deceleration Setting to 1, 3 or 4. (auto-acceleration)
- Related parameters:
  - Pr.01-12, 01-14, 01-16, 01-18 Acceleration Time 1–4)
  - Pr.01-44 Auto-Acceleration and Auto-Deceleration Setting
  - Pr.02-13 Multi-function Output 1 (Relay 1)
  - Pr.02-16 Multi-function Output 2 (MO1)

06-04 Over-current Stall Prevention during Operation

Default: 120 / 180

Settings Normal duty: 0–150% (100% corresponds to the rated current of the drive)
Heavy duty: 0–200% (100 % corresponds to the rated current of the drive)

- This is a protection for the drive to decrease output frequency automatically when the motor overloads abruptly during constant motor operation.
- If the output current exceeds the setting value for Pr.06-04 when the drive is operating, the drive decreases output frequency (according to Pr.06-05) to prevent the motor from stalling. The lower limit for the over-current stall prevention is determined by the maximum value among 0.5 Hz, Pr.01-07 and Pr.01-11.
- If the output current is lower than the setting value for Pr.06-04, the drive accelerates (according to Pr.06-05) again to the setting frequency.

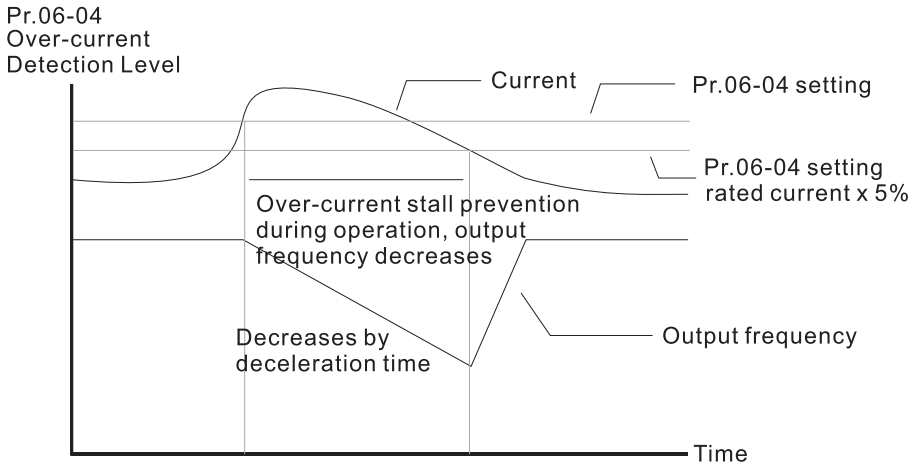

Over-current stall prevention during operation

06-05 Accel./Decel. Time Selection for Stall Prevention at Constant Speed

Default: 0

Settings
0: By current acceleration / deceleration time
1: By the first acceleration / deceleration time
2: By the second acceleration / deceleration time
3: By the third acceleration / deceleration time
4: By the fourth acceleration / deceleration time
5: By Auto-acceleration / auto-deceleration

Sets the acceleration / deceleration time selection when stall prevention occurs at constant speed.

06-06 Over-torque Detection Selection (Motor 1)

Default: 0

Settings
0: No function
1: Continue operation after over-torque detection during constant speed operation
2: Stop after over-torque detection during constant speed operation
3: Continue operation after over-torque detection during RUN
4: Stop after over-torque detection during RUN

06-09 Over-torque Detection Selection (Motor 2)

Default: 0

Settings
0: No function
1: Continue operation after over-torque detection during constant speed operation
2: Stop after over-torque detection during constant speed operation
3: Continue operation after over-torque detection during RUN
4: Stop after over-torque detection during RUN

When you set Pr.06-06 and Pr.06-09 to 1 or 3, a warning message displays but there is no error record.

When you set Pr.06-06 and Pr.06-09 to 2 or 4, a warning message displays and there is an error record.

06-07 Over-torque Detection Level (Motor 1)

Default: 120

Settings 10–250% (100% corresponds to the rated current of the drive)

06-08 Over-torque Detection Time (Motor 1)

Default: 0.1

Settings 0.1–60.0 sec.

06-10 Over-torque Detection Level (Motor 2)

Default: 120

Settings 10–250% (100% corresponds to the rated current of the drive)

06-11 Over-torque Detection Time (Motor 2)

Default: 0.1

Settings 0.1–60.0 sec.

- When the output current exceeds the over-torque detection level (Pr.06-07 or Pr.06-10) and also exceeds the over-torque detection time (Pr.06-08 or Pr.06-11), the over-torque detection follows the setting of Pr.06-06 and Pr.06-09.
- When you set Pr.06-06 or Pr.06-09 to 1 or 3, an ot1 / ot2 warning displays while the drive keeps running. The warning remains on until the output current is smaller than 5% of the over-torque detection level.

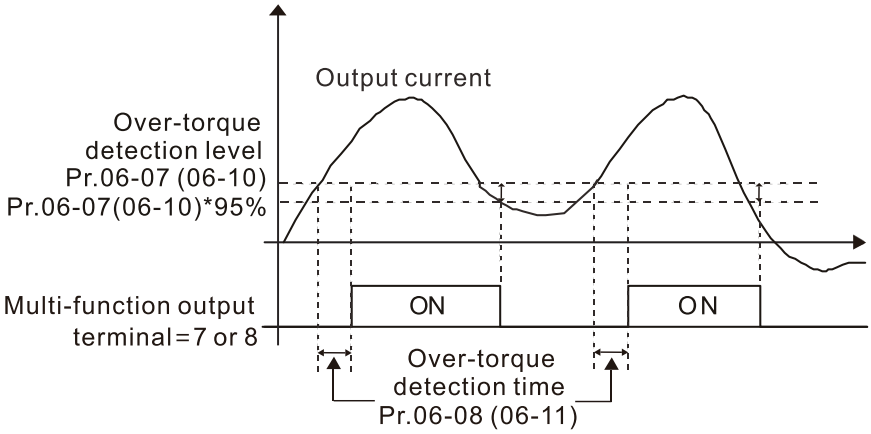

- When you set Pr.06-06 or Pr.06-09 to 2 or 4, an ot1 / ot2 warning displays and the drive stops running after over-torque detection. The drive keeps running after you manually reset it.

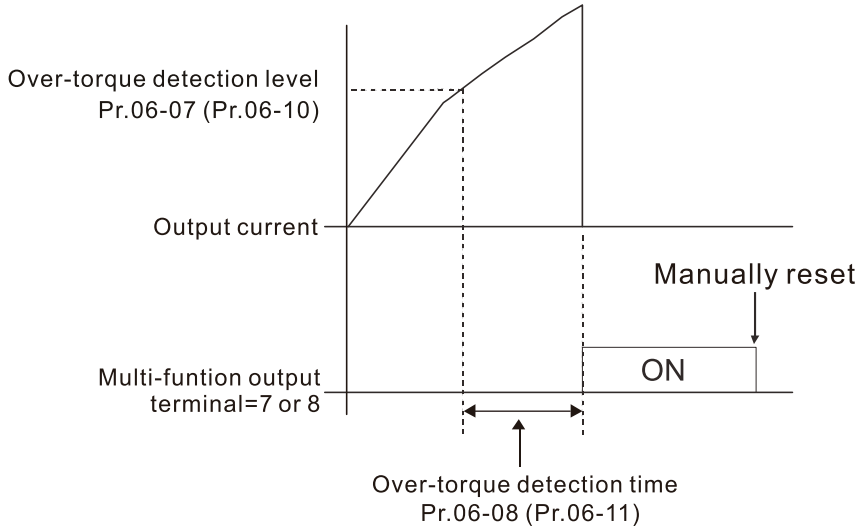

06-13 Electronic Thermal Relay Selection 1 (Motor 1)
06-27 Electronic Thermal Relay Selection 2 (Motor 2)

Default: 2

Settings 0: Inverter motor (with external forced cooling)
1: Standard motor (motor with fan on the shaft)
2: Disable

- Prevents self-cooled motor from overheating under low speed. Use an electronic thermal relay to limit the drive's output power.
- Setting the parameter to 0 is suitable for an inverter motor (motor fan using an independent power supply). For this kind of motor, there is no significant correlation between cooling capacity and motor speed. Therefore, the action of electronic thermal relays remain stable in low speed to ensure the load capability of the motor in low speed.
- Setting the parameter to 1 is suitable for standard motor (motor fan is fixed on the rotor shaft). For this kind of motor, the cooling capacity is lower in low speed; therefore, the action of an electronic thermal relay reduces the action time to ensure the life of motor.
- When the power is cycled frequently, if the power is switched OFF, the electronic thermal relay protection is reset; therefore even setting the parameter to 0 or 1 may not protect the motor well. If there are several motors connected to one drive, install an electronic thermal relay in each motor.

06-14 Electronic Thermal Relay Action Time 1 (Motor 1)
06-28 Electronic Thermal Relay Action Time 2 (Motor 2)

Default: 60.0

Settings 30.0–600.0 sec.

- Set the parameter to 150% of motor rated current and use with the setting of Pr.06-14 and Pr.06-28 to prevent motor damage due to overheating. When it reaches the setting, the drive displays "EoL1 / EoL2", and the motor free runs to stop.
- Use this parameter to set the action time of the electronic thermal relay. It works based on the I2t characteristic curve of electronic thermal relay, the output frequency and current of the drive, and the operation time to prevent the motor from overheating.

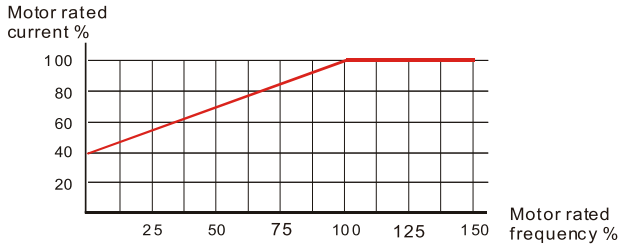

Motor cooling curve with shaft-fixed fan

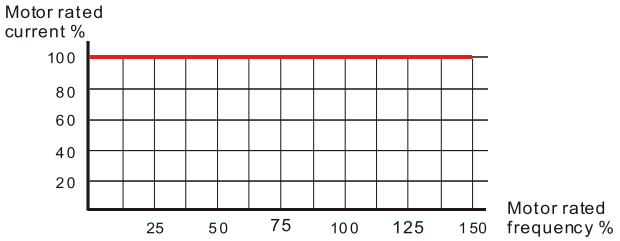

Motor cooling curve with independent fan

- The action of the electronic thermal relay depends on the settings for Pr.06-13 and Pr.06-27.
  1. Pr.06-13 or Pr.06-27 set to 0 (using inverter motor):
     When the output current of the drive is higher than 150% of motor rated current (refer to the motor cooling curve with independent fan), the drive starts to count the time. The electronic thermal relay acts when the accumulated time exceeds Pr.06-14 or Pr.06-28.
  2. Pr.06-13 or Pr.06-27 set to 1 (using standard motor):
     When the output current of the drive is higher than 150% of the motor rated current (refer to

the motor cooling curve with shaft-fixed fan), the drive starts to count the time. The electronic thermal relay acts when the accumulated time exceeds Pr.06-14 or Pr.06-28.

🕮 The actual electronic thermal relay action time adjusts according to the drive output current (shown as the motor loading rate %). The action time is short when the current is high, and the action time is long when the current is low. Refer to the following diagram: (The motor cooling curve with shaft-fixed fan and motor cooling curve with independent fan F = 50 Hz are the same one.)

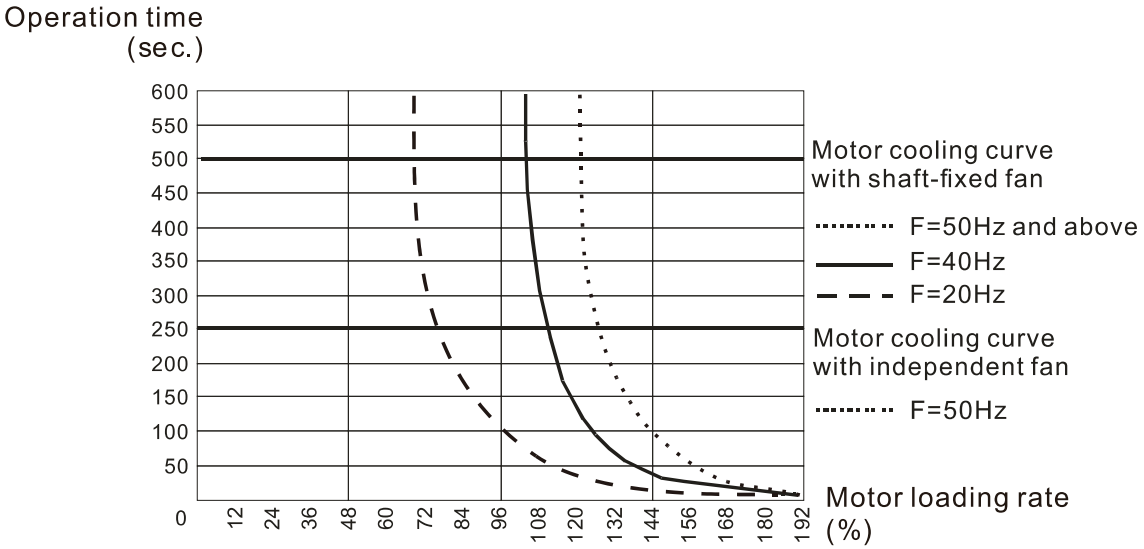

06-15 Temperature Level Overheat (OH) Warning

Default: Depending on the model power

Settings 0.0–110.0 ºC

🕮 Sets the drive's internal IGBT overheat warning level. When the temperature is higher than Pr.06-15 setting, the oH1 fault displays and the warning remains but it does not affect the drive operation.

🕮 Use this parameter to check the motor overheat in advance in order to take precautionary measures to decrease the temperature and maintain the motor's normal operation.

🕮 If you set the temperature 5ºC higher than the maximum setting value for Pr.06-15, IGBT overheating occurs and the drive stops. Refer to Chapter 14 oH1 fault descriptions for details.

06-16 Stall Prevention Limit Level (Weak Magnetic Area Current Stall Prevention Level)

Default: 100

Settings 0–100% (Refer to Pr.06-03)

🕮 This parameter only works in VF and SVC control modes of Induction motor.

Example: When Pr.06-03 = 150%, Pr.06-04 = 100% and Pr.06-16 = 80%.

The over-current stall prevention level during acceleration:

Pr.06-03 × Pr.06-16 = 150 × 80% = 120% (Refer to Pr.06-03 diagram for the protection curve)

🕮 Pr.06-16 is invalid when the over-current stall prevention activates according to Pr.06-04 at constant speed.

06-17	Fault Record 1
06-18	Fault Record 2
06-19	Fault Record 3
06-20	Fault Record 4
06-21	Fault Record 5
06-22	Fault Record 6

Default: 0

Settings
0: No fault record
1: Over-current during acceleration (ocA)
2: Over-current during deceleration (ocd)
3: Over-current during steady operation (ocn)
4: Ground fault (GFF)
6: Over-current at stop (ocS)
7: Over-voltage during acceleration (ovA)
8: Over-voltage during deceleration (ovd)
9: Over-voltage at constant speed (ovn)
10: Over-voltage at stop (ovS)
11: Low-voltage during acceleration (LvA)
12: Low-voltage during deceleration (Lvd)
13: Low-voltage at constant speed (Lvn)
14: Low-voltage at stop (LvS)
15: Phase loss protection (orP)
16: IGBT overheating (oH1)
18: IGBT temperature detection failure (tH1o)
21: Overload (oL)
22: Electronic thermal relay protection 1 (EoL1)
23: Electronic thermal relay protection 2 (EoL2)
24: Motor overheating (PTC / PT100) (oH3)
26: Over-torque 1 (ot1)
27: Over-torque 2 (ot2)
28: Under current (uC)
31: EEPROM read error (cF2)
33: U-phase error (cd1)
34: V-phase error (cd2)
35: W-phase error (cd3)
36: cc hardware failure (Hd0)
37: oc hardware failure (Hd1)
40: Auto-tuning error (AUE)
41: PID loss ACI (AFE)
48: ACI loss (ACE)
49: External fault input (EF)

50: Emergency stop (EF1)
51: External base block (bb)
52: Password is locked (Pcod)
54: Illegal command (CE1)
55: Illegal data address (CE2)
56: Illegal data value (CE3)
57: Data is written to read-only address (CE4)
58: Modbus transmission time-out (CE10)
63: Over-slip (oSL)
72: S1 internal loop detection error (STL1)
76: STO (STo)
77: S2 internal loop detection error (STL2)
78: S3 internal loop detection error (STL3)
82: Output phase loss U phase (OPL1)
83: Output phase loss V phase (OPL2)
84: Output phase loss W phase (OPL3)
87: Overload protection at low frequency (oL3)
142: Auto-tuning error 1 (DC test stage) (AUE1)
143: Auto-tuning error 2 (High frequency test stage) (AUE2)
149: Total resistance measurement fault (AUE5)
150: No-load current IO measurement fault (AUE6)
151: dq axis inductance measurement fault (AUE7)
152: High frequency injection measurement fault (AUE8)
157: Pump PID feedback error (dEv)

- When the fault occurs and forces stopping, the fault is recorded in this parameter.
- During stop with low voltage Lv (LvS warning), there is no error record. During operation with mid-low voltage Lv (LvA, Lvd, Lvn error), there is a record.
- When dEb function is valid and enabled, the drive executes dEb and records fault code 62 to Pr.06-17–Pr.06-22 and Pr.14-70–Pr.14-73 simultaneously.

06-23 Fault Output Option 1
06-24 Fault Output Option 2
06-25 Fault Output Option 3
06-26 Fault Output Option 4

Default: 0

Settings 0–65535 (refer to bit table for fault code)

- Use these parameters with multi-function output terminal (set to 35–38) for the specific requirement. When the fault occurs, the corresponding terminals activate. Convert the binary value to decimal value before you enter the value for Pr.06-23–Pr.06-26.

Fault Code	bit 0	bit 1	bit 2	bit 3	bit 4	bit 5	bit 6
	current	Volt.	OL	SYS	FBK	EXI	CE
0: No fault record							
1: Over-current during acceleration (ocA)	●						
2: Over-current during deceleration (ocd)	●						
3: Over-current during steady operation (ocn)	●						
4: Ground fault (GFF)	●						
6: Over-current at stop (ocS)	●						
7: Over-voltage during acceleration (ovA)		●					
8: Over-voltage during deceleration (ovd)		●					
9: Over-voltage at constant speed (ovn)		●					
10: Over-voltage at stop (ovS)		●					
11: Low-voltage during acceleration (LvA)		●					
12: Low-voltage during deceleration (Lvd)		●					
13: Low-voltage at constant speed (Lvn)		●					
14: Low-voltage at stop (LvS)		●					
15: Phase loss protection (orP)		●					
16: IGBT overheating (oH1)			●				
18: IGBT temperature detection failure (tH1o)			●				
21: Overload (oL)			●				
22: Electronic thermal relay protection 1 (EoL1)			●				
23: Electronic thermal relay protection 2 (EoL2)			●				
24: Motor overheating (PTC / PT100) (oH3)			●				
26: Over-torque 1 (ot1)			●				
27: Over-torque 2 (ot2)			●				
28: Under current (uC)	●						
31: EEPROM read error (cF2)				●			
33: U-phase error (cd1)				●			
34: V-phase error (cd2)				●			
35: W-phase error (cd3)				●			
36: cc hardware failure (Hd0)				●			
37: oc hardware failure (Hd1)				●			
40: Auto-tuning error (AUE)				●			
41: PID loss ACI (AFE)					●		
48: ACI loss (ACE)					●		
49: External fault input (EF)						●	
50: Emergency stop (EF1)						●	
51: External base block (bb)						●	
52: Password is locked (Pcod)				●			
54: Illegal command (CE1)							●
55: Illegal data address (CE2)							●

Fault Code	bit 0	bit 1	bit 2	bit 3	bit 4	bit 5	bit 6
	current	Volt.	OL	SYS	FBK	EXI	CE
56: Illegal data value (CE3)							●
57: Data is written to read-only address (CE4)							●
58: Modbus transmission time-out (CE10)							●
63: Over-slip (oSL)						●	
72: S1 internal loop detection error (STL1)				●			
76: STO (STo)				●			
77: S2 internal loop detection error (STL2)				●			
78: S3 internal loop detection error (STL3)				●			
82: Output phase loss U phase (OPL1)	●						
83: Output phase loss V phase (OPL2)	●						
84: Output phase loss W phase (OPL3)	●						
87: Overload protection at low frequency (oL3)			●				
142: Auto-tuning error 1 (DC test stage) (AUE1)				●			
143: Auto-tuning error 2 (High frequency test stage) (AUE2)				●			
149: Total resistance measurement fault (AUE5)				●			
150: No-load current IO measurement fault (AUE6)				●			
151: dq axis inductance measurement fault (AUE7)				●			
152: High frequency injection measurement fault (AUE8)				●			
157: Pump PID feedback error (dEv)				●			

06-29 PTC Detection Selection

Default: 0

Settings 0: Warn and continue operation
1: Fault and ramp to stop
2: Fault and coast to stop
3: No warning

🕮 Sets the operation mode of a drive after you set Pr.06-29 to define PTC detection.

🕮 Running a motor at low frequency for a long time reduces the cooling function of the motor fan. To prevent the motor from damage due to overheating, use a Positive Temperature Coefficient thermistor on the motor, and connect the thermistor output signal to the drive's analog input terminals.

06-30 PTC Level

Default: 50.0

Settings 0.0–100.0%

🕮 Sets AVI / ACI analog input function Pr.03-00 to 6 [Positive temperature coefficient (PTC) thermistor input value].

- Use this to set the PTC level; the corresponding value for 100% is the analog input maximum value.
- When using the AVI terminal, you must set Pr.03-28 to 0 and switch AVI voltage to 0–10 V. At this time, the AVI input impedance is 20 KΩ.
- When the temperature reaches to the set protection level, the motor acts according to the settings for Pr.06-29 and displays warning “oH3” (if Pr.06-29 = 1–3). When the temperature is lower than the set protection level, you can press RESET key to clear the fault.
- The PTC uses the AVI-input and is connected via resistor-divider as shown below:
  1. The voltage between +10V to ACM: lies within10V–11V.
  2. The impedance for AVI is around 20K Ω. Recommended value for resistor-divider 1K–10KΩ.
  3. Please contact your motor dealer for the curve of temperature and resistance value for PTC.
     Protection level (Pr.06-30) = V + 10 × (RPTC//20K) / [R1 + (RPTC//20K)]
     V+10: voltage between +10V-ACM, Range 10.4~11.2V_{DC};
     RPTC: motor PTC overheat protection level;
     20KΩ: is AVI input impedance;
     R1: resistor-divider (recommended value: 1–10kΩ)

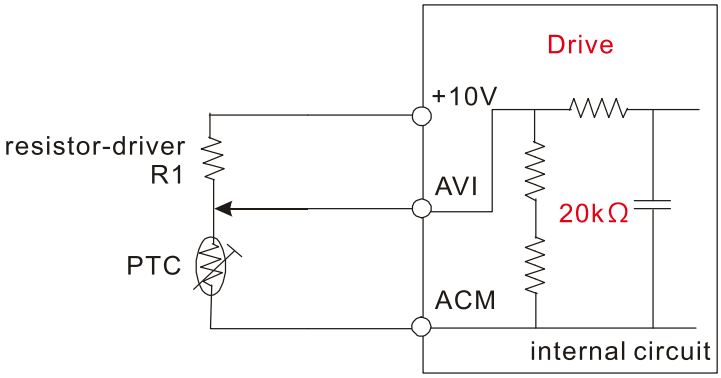

Take the standard PTC thermistor as example: if protection level is 1330Ω, the voltage between +10V-ACM is 10.5V and resistor-divider R1 is 4.4kΩ.

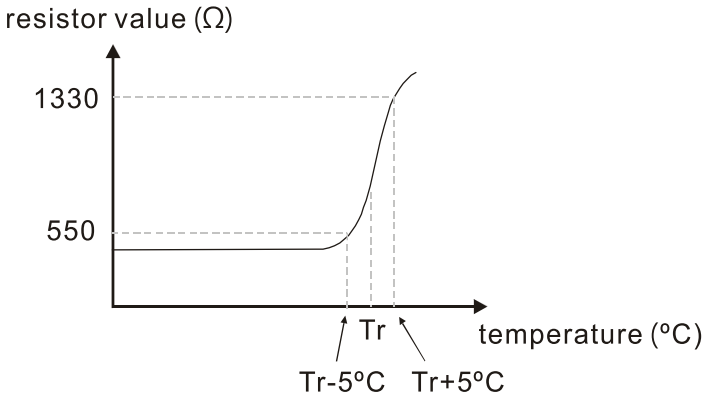

Refer to following calculation for Pr.06-30 setting:

1330//20000 = (1330*20000) / (1330+20000) = 1247.07

10.5 × 1247.07 / (4400+1247.07) = 2.32(V) ≒ 2.3(V)

Pr.06-30 should be set to 2.3/10V*% = 23%

06-31 Frequency Command for Malfunction

Default: Read only

Settings 0.00–599.00 Hz

📖 When a malfunction occurs, check the current Frequency command. If it happens again, it overwrites the previous record.

06-32 Output Frequency at Malfunction

Default: Read only

Settings 0.00–599.00 Hz

📖 When a malfunction occurs, check the current output frequency. If it happens again, it overwrites the previous record.

06-33 Output Voltage at Malfunction

3 Default: Read only

Settings 0.0–6553.5 V

📖 When a malfunction occurs, check the current output voltage. If it happens again, it overwrites the previous record.

06-34 DC bus Voltage at Malfunction

Default: Read only

Settings 0.0–6553.5 V

📖 When a malfunction occurs, check the current DC voltage. If it happens again, it overwrites the previous record.

06-35 Output Current at Malfunction

Default: Read only

Settings 0.00–655.35 Amp

📖 When a malfunction occurs, check the current output current. If it happens again, it overwrites the previous record.

06-36 IGBT Temperature at Malfunction

Default: Read only

Settings -3276.7–3276.7°C

📖 When a malfunction occurs, check the current IGBT temperature. If it happens again, it overwrites the previous record.

06-38 Motor Speed in rpm at Malfunction

Default: Read only

Settings -32767–32767 rpm

📖 When a malfunction occurs, check the current motor speed in rpm. If it happens again, it overwrites the previous record.

06-39 Torque Command at Malfunction

Default: Read only

Settings -32767–32767%

📖 When a malfunction occurs, check the current torque command. If it happens again, it overwrites the previous record.

06-40 Status of the Multi-function Input Terminal at Malfunction

Default: Read only

Settings 0000h–FFFFh

06-41 Status of the Multi-function Output Terminal at Malfunction

Default: Read only

Settings 0000h–FFFFh

📖 When a malfunction occurs, check the current status of the multi-function input/output terminals. If it happens again, it overwrites the previous record.

06-42 Drive Status at Malfunction

Default: Read only

Settings 0000h–FFFFh

📖 When a malfunction occurs, check the current drive status (communication address 2101H). If it happens again, it overwrites the previous record.

06-44 STO Latch Selection (only for models built-in with STO function)

Default: 0

Settings 0: STO Latch
1: STO no Latch

📖 Pr.06-44 = 0: STO Alarm Latch. After you clear the cause of the STO Alarm, use a Reset command to clear the STO Alarm.

📖 Pr.06-44 = 1: STO Alarm no Latch. After you clear the cause of the STO Alarm, the STO Alarm clears automatically.

📖 All of the STL1–STL3 errors are “Alarm Latch” mode (in STL1–STL3 mode, the Pr.06-44 function is not effective).

06-45 Output Phase Loss Detection Action (OPHL)

Default: 3

Settings 0: Warn and continue operation
1: Fault and ramp to stop
2: Fault and coast to stop
3: No warning

📖 The OPHL protect function is active when the setting is not 3.

06-46 Detection Time for Output Phase Loss

Default: 0.500

Settings 0.000–65.535 sec.

06-47 Current Detection Level for Output Phase Loss

Default: 1.00

Settings 0.00–100.00%

06-48 DC Brake Time for Output Phase Loss

Default: 0.000

Settings 0.000–65.535 sec.

- Setting Pr.06-48 to 0 disables the OPHL detection function.
- The status of output phase loss detection are as following:
  - Status 1: The drive is in operation

    When any phase is less than the Pr.06-47 setting, and exceeds the Pr.06-46 setting time, the drive executes according to the Pr.06-45 setting.

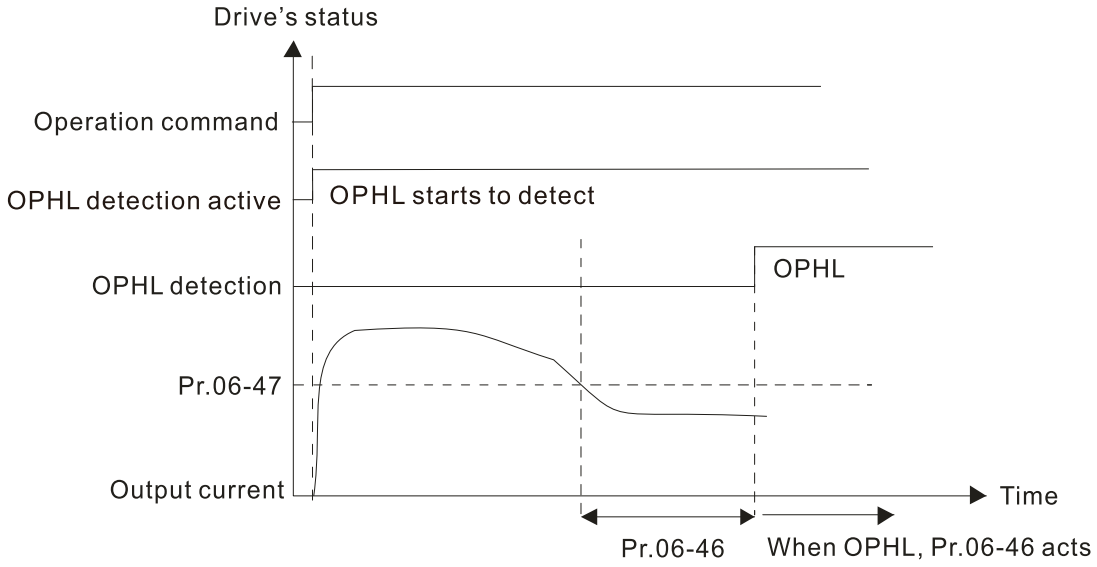

  - Status 2: The drive is in STOP; Pr.06-48 ≠ 0; Pr.07-02 ≠ 0

    When the drive starts, it executes Pr.06-48 first, and then executes Pr.07-02 (DC brake). The DC brake current level in this state includes two parts: one is 20 times the Pr.06-47 setting value in Pr.06-48 setting time; the other is the Pr.07-01 setting value in Pr.07-02 setting time.

    Status 2-1: Pr.06-48 ≠ 0, Pr.07-02 ≠ 0 (No OPHL detected before operation)

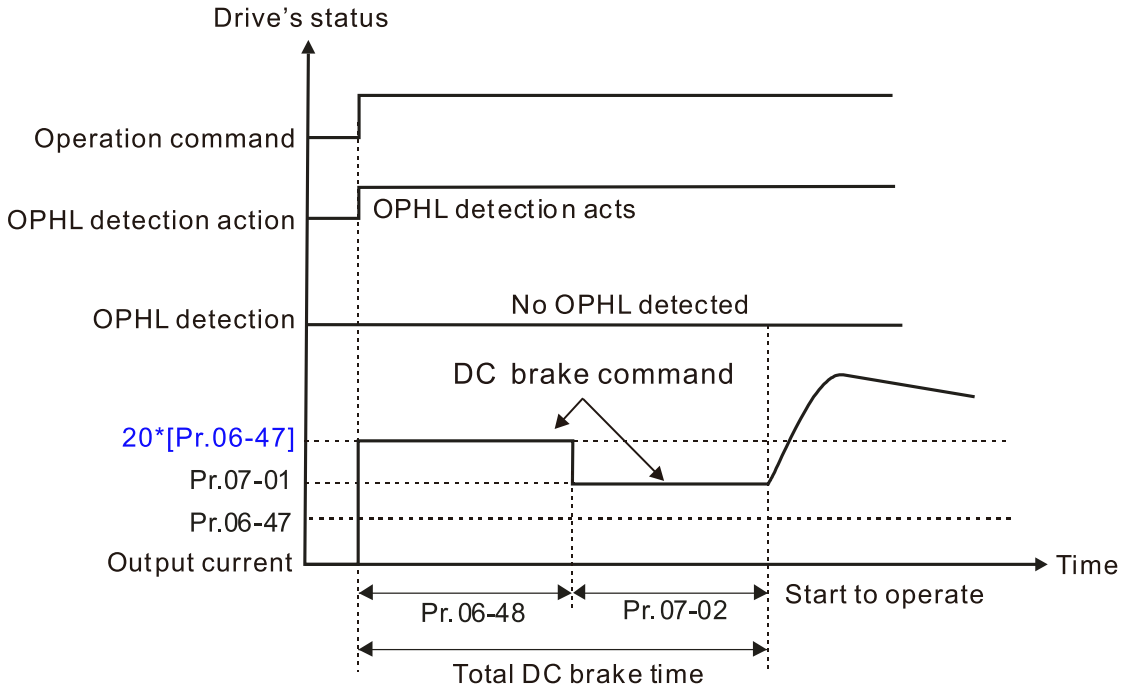

Status 2-2: Pr.06-48 ≠ 0, Pr.07-20 ≠ 0 (OPHL detected before operation)

In this period, if an OPHL occurs within the time for Pr.06-48, the drive executes the Pr.06-45 setting after the drive starts counting for half the time of Pr.06-48.

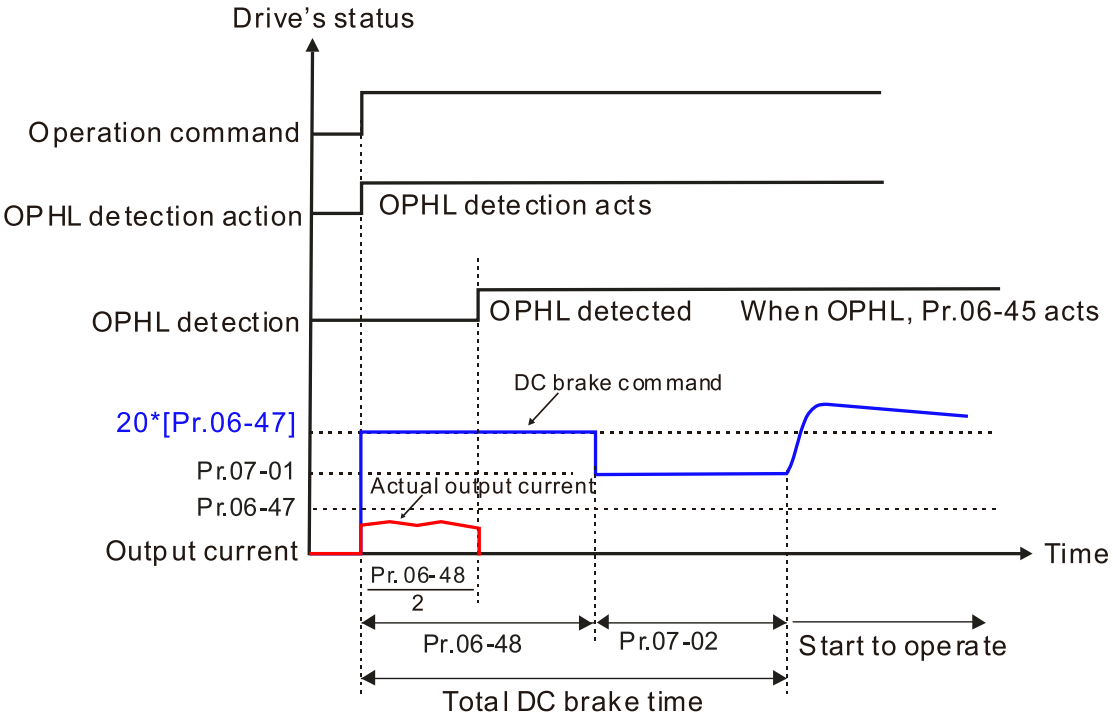

- Status 3: The drive is in STOP; Pr.06-48 ≠ 0; Pr.07-02 = 0

  When the drive starts, it executes Pr.06-48 as the DC brake. The DC brake current level is 20 times the Pr.06-47 setting value.

  Status 3-1: Pr.06-48 ≠ 0, Pr.07-02 = 0 (No OPHL detected before operation)

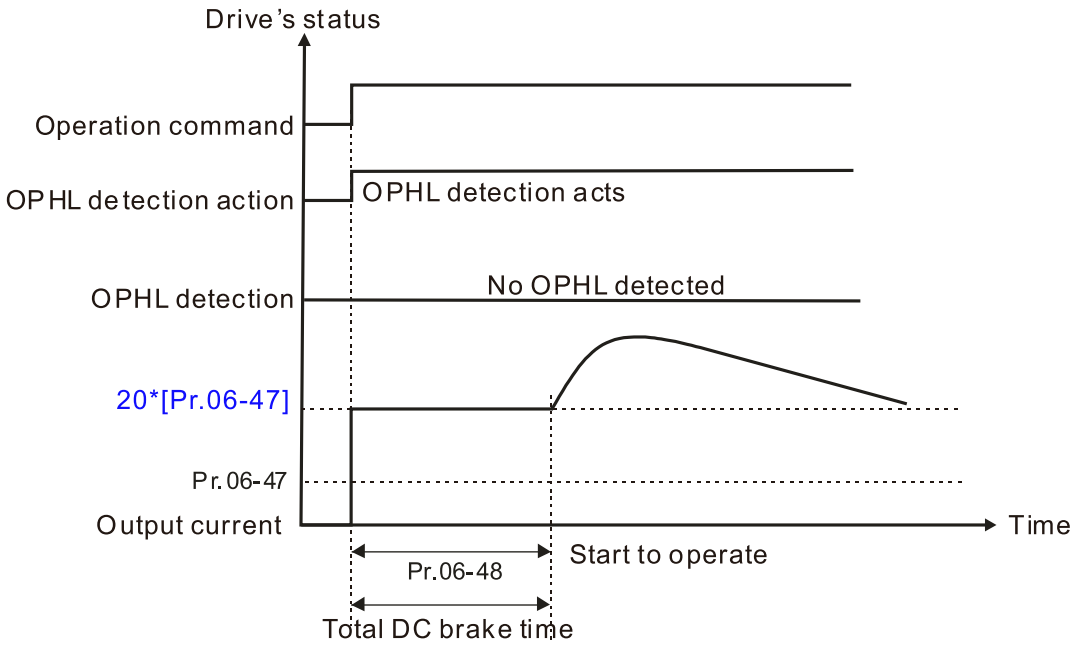

Status 3-2: Pr.06-48 ≠ 0, Pr.07-02 = 0 (OPHL detected before operation)

In this period, if an OPHL occurs within the time for Pr.06-48, the drive executes the Pr.06-45 setting after the drive starts counting for half the time of Pr.06-48.

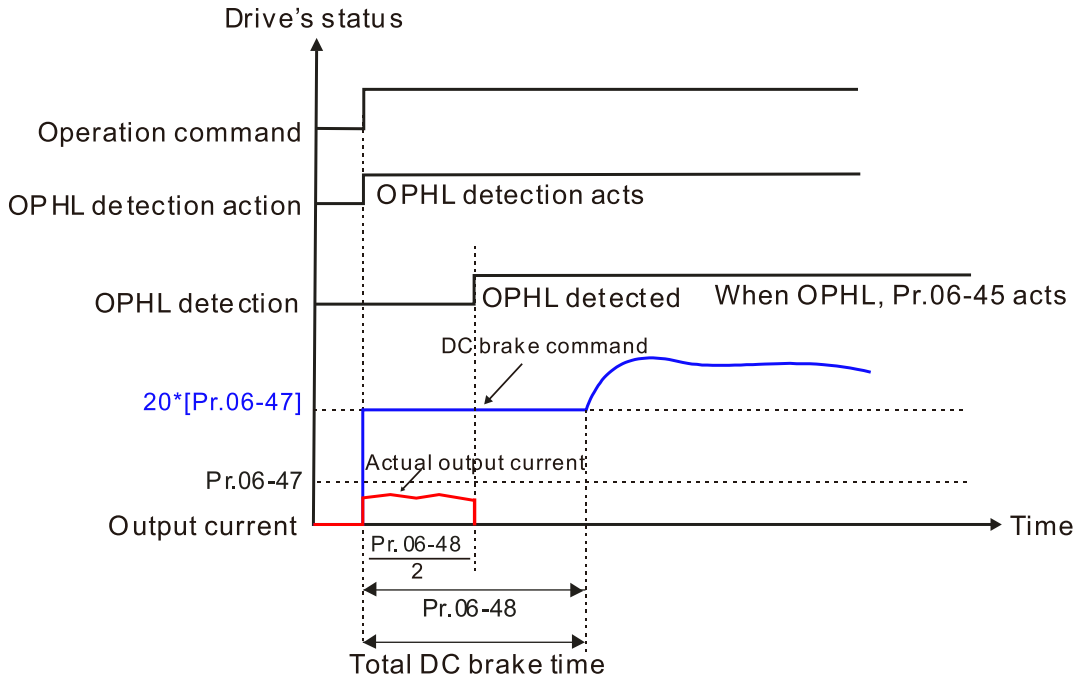

06-49 LvX Auto-reset

Default: 0

Settings 0: Disable

1: Enable

06-53 Input phase loss detection action (OrP)

Default: 0

Settings 0: Fault and ramp to stop

1: Fault and coast to stop

📖 The drive executes the input phase loss protection according to Pr.06-53.

06-55 Derating Protection

Default: 0

Settings 0: Constant rated current and limit carrier wave by load current and temperature

1: Constant carrier frequency and limit load current by setting carrier wave

2: Constant rated current (same as setting 0), but close current limit

📖 Allowable maximum output frequency and the minimum carrier wave limit in control mode:

For VF and SVC modes:

When the maximum output frequency is 599 Hz, the minimum carrier wave is 6 k.

📖 Setting 0:

- Actual over-current stall prevention level = derating ratio × over-current stall prevention level (Pr.06-03 and Pr.06-04).
- Rated current derating level: derating ratio × rated current (Pr.00-01).

- When the operating point is greater than the derating curve, the carrier frequency (Fc) output by the drive decreases automatically according to the ambient temperature, overload output current and time.
- Applicable conditions: If overloads are not frequent, and the concern is only about the carrier frequency operating with the rated current for a long time, and changes to the carrier wave due to short overload are acceptable, set to 0.
- Take VFD9A0ME43ANSAA normal Duty for example: ambient temperature 50°C, UL Open Type, and independent installation. When the carrier frequency is set to 10 kHz, it corresponds to 75% of the derating ratio. When the output current is higher than the value, it automatically decreases the carrier frequency according to the ambient temperature, output current and overload time. At this time, the over-current stall prevention level is 150%.

🕮 Setting 1:

- Actual over-current stall prevention level = derating ratio × over-current stall prevention level (Pr.06-03 and Pr.06-04).
- When the operating point is greater than the derating curve 1, the carrier frequency (Fc) output by the drive is fixed to the default value.
- Applicable conditions: Select this mode if the change of carrier frequency and motor noise caused by ambient temperature and frequent overload are not acceptable. Refer to Pr.00-17.
- Take VFD9A0ME43ANSAA normal Duty for example: ambient temperature 50°C, UL Open Type, and independent installation. When the carrier frequency is set to 10 kHz, it corresponds to 75% of the derating ratio. When the output current is higher than the value, the carrier frequency will not be reduced by this, but if the overload continues for a long time, the oH1 fault (IGBT overheating) or oL fault (the inverter is overloaded) will be triggered due to the IGBT temperature rise, and the motor will eventually stop.
- The oL protection executes when the current is 120% × 75% = 90% for one minute; therefore, it must operate by the curve to keep the carrier frequency.

🕮 Setting 2:

- Actual over-current stall prevention level = derating ratio × over-current stall prevention level (Pr.06-03 and Pr.06-04).
- Rated current derating level: derating ratio × rated current (Pr.00-01).
- The protection method and action are set to 0, but this disables the current limit when output current is the derating ratio x 120% of output current in normal load, and derating ratio x 180% of output current in light load.

  The advantage: it can provide a higher starting output current (Pr.06-55 = 0) when the carrier frequency (Pr.00-17) setting is higher than the default value.

  The disadvantage: the carrier frequency derates easily when it overloads.
- For example: when Pr.06-55 = 0 or 1, the over-current stall prevention level = Ratio × Pr.06-03. When Pr.06-55 = 2, the over-current stall prevention level = Pr.06-03.

🕮 Use with the settings for Pr.00-16 and Pr.00-17.

🕮 The ambient temperature also affects the derating; refer to Section 9-6 Derating for Ambient Temperature, Altitude and Carrier Frequency.

Example:

Take VFD9A0ME43ANSAA in normal duty for example: ambient temperature 50ºC, UL open-type, and independent installation. When the carrier frequency is set to 10 kHz, it corresponds to 75% of the rated output current. The ambient temperature 60ºC corresponds to 75% * 75% of the rated output current.

06-56 PT100 Voltage Level 1

Default: 5.000

Settings 0.000–10.000 V

06-57 PT100 Voltage Level 2

Default: 7.000

Settings 0.000–10.000 V

Condition settings: Pr.06-57 > Pr.06-56.

06-58 PT100 Level 1 Frequency Protection

Default: 0.00

Settings 0.00–599.00 Hz

06-59 PT100 activation level 1 protection frequency delay time

Default: 60

Settings 0–6000 sec.

PT100 operation instructions

1. Use voltage type analog input (AVI voltage 0–10 V) and select PT100 mode.
2. Set Pr.03-00 = 11 and Pr.03-28 = 0.
3. Need to connect divider resistance and recommended voltage is 950Ω (≥ 0.2W).
4. There are two types of action levels for PT100. The diagram below shows the PT100 protecting action.

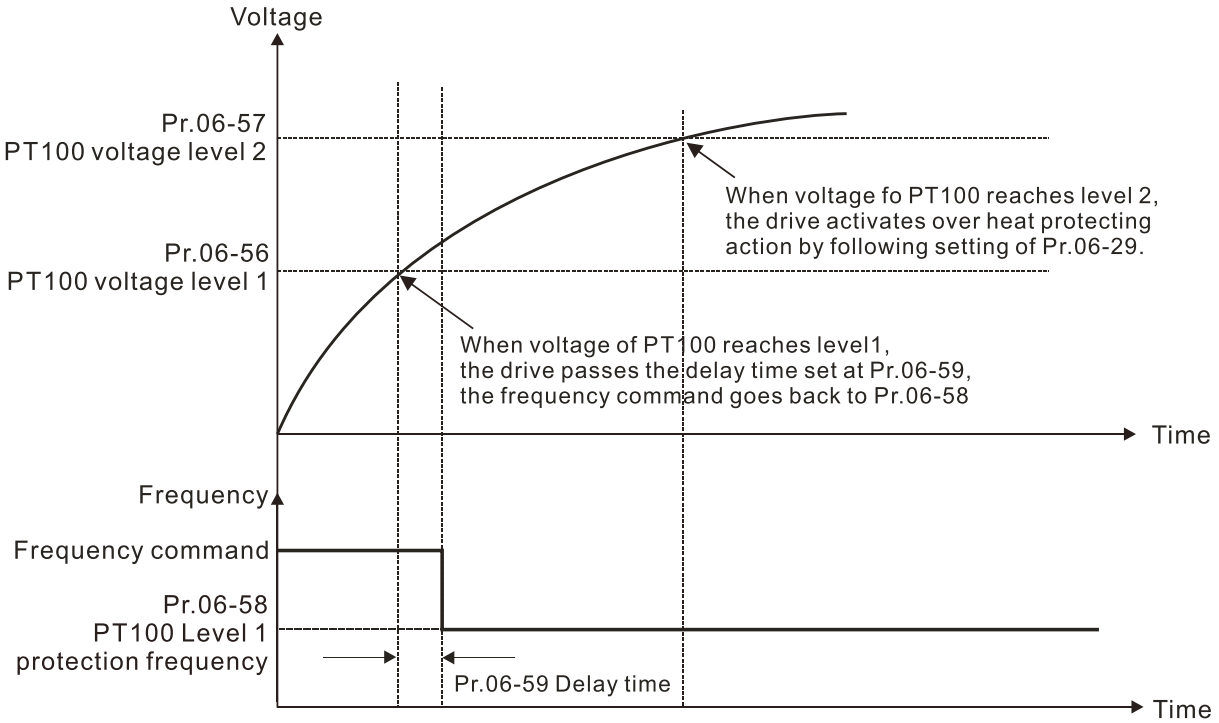

PT100 wiring diagram.

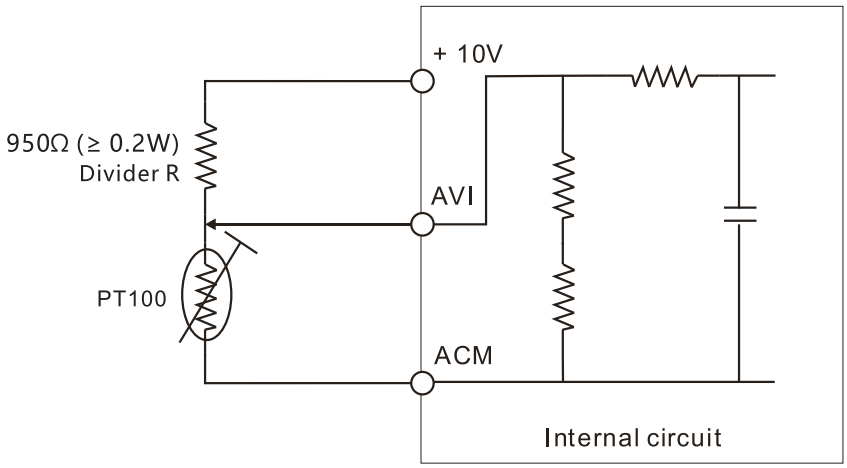

Example:

When using PT100, if the motor temperature is higher than 135°C (275°F), the drive starts to count the delay time for auto-deceleration (Pr.06-59). The drive decreases the motor frequency to the setting for Pr.06-58 when it reaches the delay time count value. The drive operates at the frequency set for Pr.06-58 until the motor temperature is lower than 135°C (275°F). If the motor temperature is higher than 150°C (302°F), the drive automatically decelerates to STOP and displays the warning “OH3”.

Set up process:

1. Refer to the PT100 wiring diagram for wiring.
2. Refer to the RTD temperature and resistance comparison table
   Temperature = 135°C, resistance = 151.71 Ω, input current: 9 mA, voltage: about 1.37 V_{DC}
   Temperature = 150°C, resistance = 157.33 Ω, input current: 9 mA, voltage: about 1.42 V_{DC}
3. When the RTD temperature > 135°C, the drive decelerates to the specified operation frequency automatically. Then, Pr.06-56 = 1.37 and Pr.06-58 = 10 Hz. When Pr.06-58 = 0, it disables the specified operation frequency.
4. When RTD temperature > 150°C, the drive outputs a fault, decelerates to STOP, and displays the warning “OH3”. Then, Pr.06-57 = 1.42 and Pr.06-29 = 1 (warn and ramp to stop).

06-60 Software Detection GFF Current Level

Default: 60.0

Settings 0.0–6553.5%

06-61 Software Detection GFF Filter Time

Default: 0.10

Settings 0.00–655.35 sec.

When the drive detects that the unbalanced three-phase output current is higher than the setting for Pr.06-60, GFF protection activates. The drive then stops output.

06-63	Operation Time of Fault Record 1 (Day)
06-65	Operation Time of Fault Record 2 (Day)
06-67	Operation Time of Fault Record 3 (Day)
06-69	Operation Time of Fault Record 4 (Day)

06-90	Operation Time of Fault Record 5 (Day)
06-92	Operation Time of Fault Record 6 (Day)

Default: Read only

Settings 0–65535 days

06-64	Operation Time of Fault Record 1 (Min.)
06-66	Operation Time of Fault Record 2 (Min.)
06-68	Operation Time of Fault Record 3 (Min.)
06-70	Operation Time of Fault Record 4 (Min.)
06-91	Operation Time of Fault Record 5 (Min.)
06-93	Operation Time of Fault Record 6 (Min.)

Default: Read only

Settings 0–1439 min.

🕮 If there is any malfunction when the drive operates, Pr.06-17–06-22 records the malfunctions, and Pr.06-63–06-70 records the operation time for four sequential malfunctions. Check if there is any problem with the drive according to the interval of the recorded fault.

Example:

The first error: ocA occurs after motor drive operates for 1000 minutes.

The second error: ocd occurs after another 1000 minutes.

The third error: ocn occurs after another 1000 minutes.

The fourth error: ocA occurs after another 1000 minutes.

The fifth error: ocd occurs after another 1000 minutes.

The sixth error: ocn occurs after another 1000 minutes.

Then Pr.06-17–06-22 and Pr.06-63–06-70 are recorded as follows:

	1st fault	2nd fault	3rd fault	4th fault	5th fault	6th fault
Pr.06-17	ocA	ocd	ocn	ocA	ocd	ocn
Pr.06-18	0	ocA	ocd	ocn	ocA	ocd
Pr.06-19	0	0	ocA	ocd	ocn	ocA
Pr.06-20	0	0	0	ocA	ocd	ocn
Pr.06-21	0	0	0	0	ocA	ocd
Pr.06-22	0	0	0	0	0	ocA
Pr.06-63	1000	560	120	1120	680	240
Pr.06-64	0	1	2	2	3	4
Pr.06-65	0	1000	560	120	1120	680
Pr.06-66	0	0	1	2	2	3
Pr.06-67	0	0	1000	560	120	1120
Pr.06-68	0	0	0	1	2	2
Pr.06-69	0	0	0	1000	560	120
Pr.06-70	0	0	0	0	1	2

NOTE: By examining the time record, you can see that that the last fault (Pr.06-17) happened after the drive ran for 4 days and 240 minutes.

06-71 Low Current Setting Level

Default: 0.0

Settings 0.0–100.0%

06-72 Low Current Detection Time

Default: 0.00

Settings 0.00–360.00 sec.

06-73 Low Current Action

Default: 0

Settings 0 : No function
1 : Fault and coast to stop
2 : Fault and ramp to stop by the second deceleration time
3 : Warn and continue operation

- The drive operates according to the setting for Pr.06-73 when the output current is lower than the setting for Pr.06-71 and when the time of the low current exceeds the detection time for Pr.06-72. Use this parameter with the external multi-function output terminal 44 (for low current output).
- The low current detection function does not execute when drive is in sleep or standby status.

06-80 Fire Mode

Default: 0

Settings 0: Disable
1: Forward (counterclockwise) operation
2: Reverse (clockwise) operation

- Use this parameter with multi-function input terminal setting 58 or 59, and multi-function output terminal setting 53.
  0: Fire detection is invalid.
  1: The motor operates in a counterclockwise direction (U, V, W).
  2: The motor operates in a clockwise direction (U, W, V).

06-81 Operating Frequency in Fire Mode

Default: 60.00

Settings 0.00–599.00 Hz

06-88 Operation Times in Fire Mode

Default: Read only

Settings 0–65535 times

[This page intentionally left blank]

07 Special Parameters

You can set this parameter during operation.

07-00 Software brake chopper action level

Default: 370.0 / 740.0

Settings 115V / 230V models: 350.0–450.0 V_{DC}
460V models: 700.0–900.0 V_{DC}

Sets the brake transistor level for the DC bus voltage. Choose a suitable brake resistor to achieve the best deceleration. Refer to Chapter 7 Optional Accessories for information about brake resistors.

07-01 DC Brake Current Level

Default: 0

Settings 0–100%

Sets the level of the DC brake current output to the motor during start-up and stop. When you set the DC brake current percentage, the rated current is regarded as 100%. Start with a low DC brake current level, and increase it slowly until the proper brake torque is reached. However, to avoid burning the motor, the DC brake current can NOT exceed the rated current. Therefore, DO NOT use the DC brake for mechanical retention, otherwise injury or accident may occur.

07-02 DC Brake Time at Start-up

Default: 0.0

Settings 0.0–60.0 sec.

The motor may continue rotating after the drive stops output due to external forces or the inertia of the motor itself. If you use the drive with the motor rotating, it may cause motor damage or trigger drive protection due to over-current. This parameter outputs DC current, generating torque to force the motor stop to get a stable start before motor operation. This parameter determines the duration of the DC brake current output to the motor when the drive starts up. Setting this parameter to 0.0 disables the DC brake at start-up.

07-03 DC Brake Time at STOP

Default: 0.0

Settings 0.0–60.0 sec.

The motor may continue rotating after the drive stops output due to external forces or the inertia of the motor itself. This parameter outputs DC current, generating torque to force the drive stop after the drive stops output to make sure that the motor stops.

This parameter determines the duration of the DC Brake current output to the motor when braking. To enable DC brake at STOP, set Pr.00-22 (Stop Method) to 0 (ramp to stop).

Related parameters: Pr.00-22 Stop Method, Pr.07-04 DC Brake Frequency at Start

07-04 DC Brake Frequency at STOP

Default: 0.00

Settings 0.00–599.00 Hz

- This parameter determines the start frequency of the DC brake before the drive ramps to stop. When this setting is less than Pr.01-09 (Start-up Frequency), the start frequency of the DC brake starts from the minimum frequency.

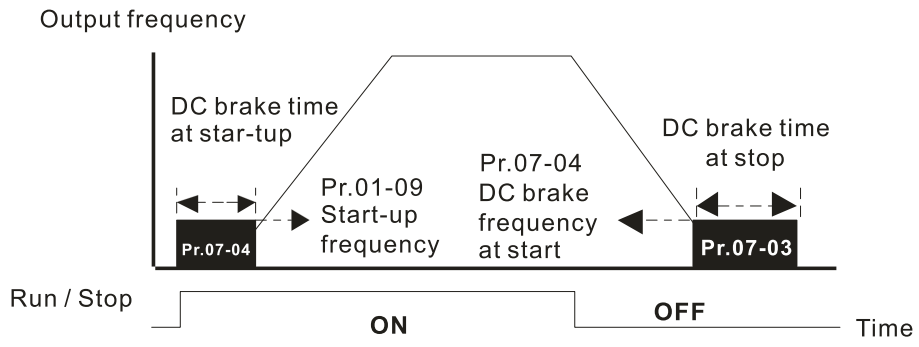

DC Brake Output Timing Diagram

- Use the DC brake before running the motor when the load is movable at stop, such as with fans and pumps. The motor is in free operating status and in unknown rotation direction before the drive starts up. Execute the DC brake before you start the motor.
- Use DC Brake at STOP when you need to brake the motor quickly or to control the positioning, such as with cranes or cutting machines.

07-05 Voltage Increasing Gain

Default: 100

Settings 1–200%

- When using speed tracking, adjust Pr.07-05 to slow down the increasing voltage gain if there are errors such as oL or oc; however, the speed tracking time will be longer.

07-06 Restart after Momentary Power Loss

Default: 0

Settings 0: Stop operation
1: Speed tracking by the speed before the power loss
2: Speed tracking by the minimum output frequency

- Determines the operation mode when the drive restarts from a momentary power loss.
- The power system connected to the drive may power off momentarily for many reasons. This function allows the drive to keep outputting after the drive is repowered and does not cause the drive to stop.
- 1: Frequency tracking begins before momentary power loss and accelerates to the master Frequency command after the drive output frequency and motor rotator speed are synchronous. Use this setting when there is a lot of inertia with little resistance on the motor load. For example, in equipment with a large inertia flywheel, there is NO need to wait until the flywheel stops completely after a restart to execute the operation command; therefore, it saves time.

2: Frequency tracking starts from the minimum output frequency and accelerates to the master Frequency command after the drive output frequency and motor rotator speed are synchronous. Use this setting when there is little inertia and large resistance.

07-07 Allowed Power Loss Duration

Default: 2.0

Settings 0.0–20.0 sec.

Determines the maximum time of allowable power loss. If the duration of a power loss exceeds this parameter setting, the AC motor drive stops output.

Pr.07-06 is valid when the maximum allowable power loss time is ≤ 20 seconds and the AC motor drive displays “LV”. If the AC motor drive is powered off due to overload, even if the maximum allowable power loss time is ≤ 20 seconds, the operation mode set in Pr.07-06 does not execute.

07-08 Base Block Time

Default: 0.5

Settings 0.0–60.0 sec.

When momentary power loss is detected, the AC motor drive blocks its output and then waits for a specified period of time (determined by Pr.07-08, called Base Block Time) before resuming operation. Set this parameter to the time that allows the residual voltage at the output side to decrease to 0 V before activating the drive again.

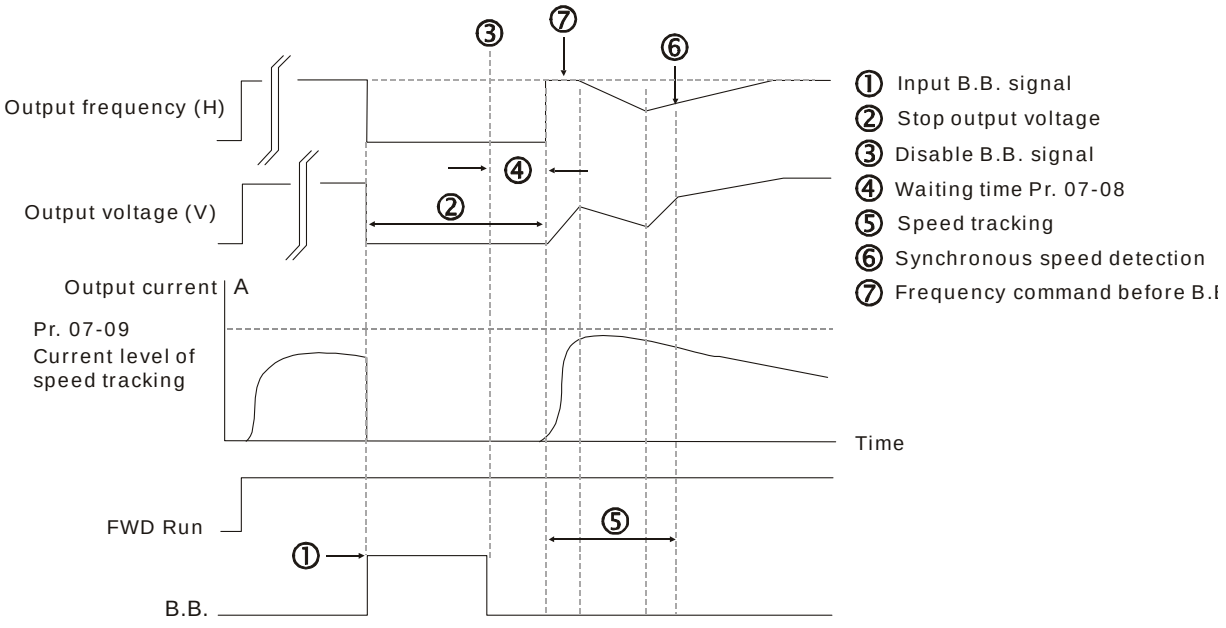

B.B. Speed tracking: from last output frequency

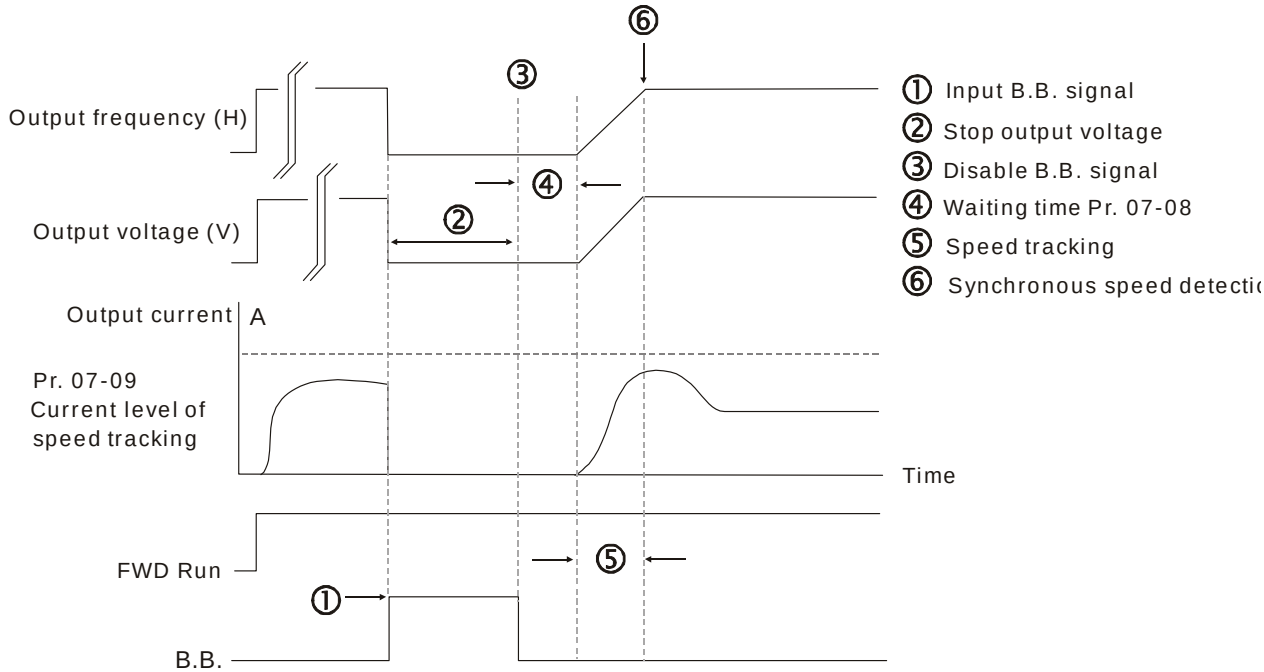

B.B. Speed tracking: from minimum output frequency

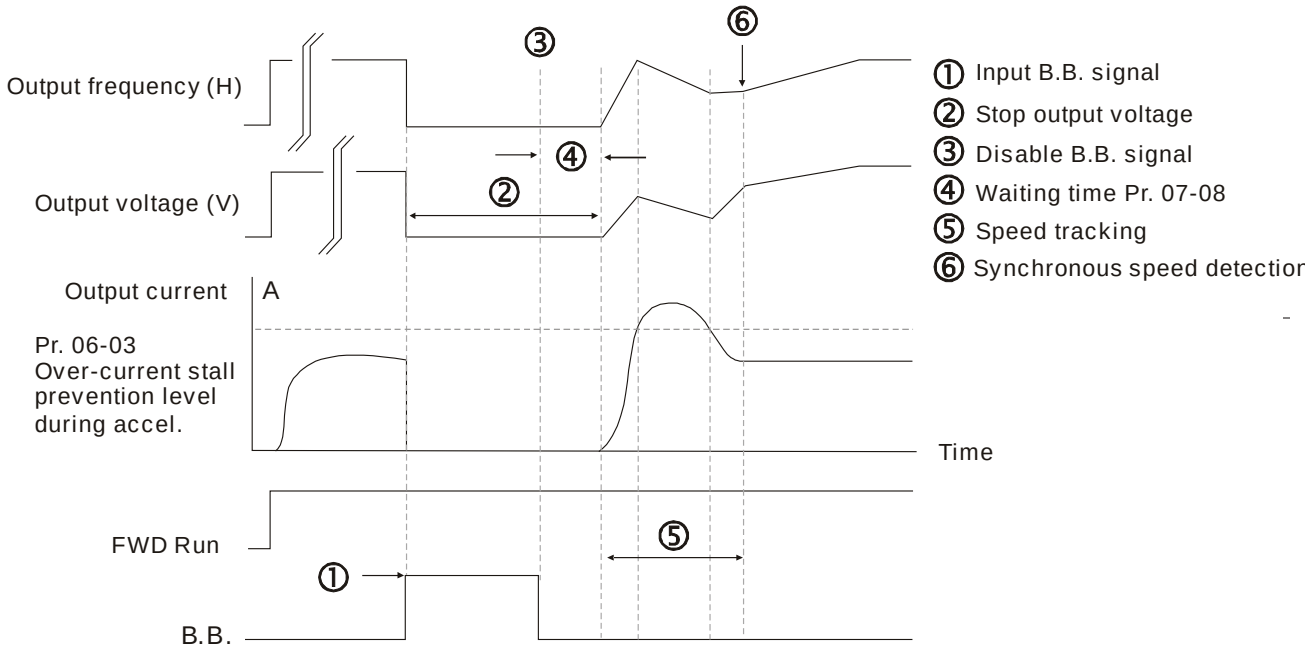

Over-current stall prevention

07-09 Current Limit of Speed Tracking

Default: 100

Settings 20–200%

- The AC motor drive executes speed tracking only if the output current is greater than the value set in Pr.07-09.
- The maximum current for speed tracking affects the synchronous time. The larger the parameter setting is, the faster the synchronization occurs. However, if the parameter setting is too large, the overload protection function may be activated.

07-10 Restart after Fault Action

Default: 0

Settings 0: Stop operation
1: Speed tracking by current speed
2: Speed tracking by minimum output frequency

📖 Faults include: bb, oc, ov, occ. To restart after oc, ov, occ, you can NOT set Pr.07-11 to 0.

07-11 Number of Times of Restart after Fault

Default: 0

Settings 0–10

📖 After fault (allowed fault: oc, ov, occ) occurs, the AC motor drive can reset and restart automatically up to 10 times.

📖 If the number of faults exceeds the Pr.07-11 setting, the drive does not reset and restart until you press “RESET” manually and execute the operation command again.

07-12 Speed Tracking during Start-up

Default: 0

Settings 0: Disable
1: Speed tracking by maximum output frequency
2: Speed tracking by motor frequency at start
3: Speed tracking by minimum output frequency

📖 Speed tracking is suitable for punch, fans and other large inertia loads. For example, a mechanical punch usually has a large inertia flywheel, and the general stop method is coast to stop. If it needs to be restarted again, the flywheel may take 2–5 minutes or longer to stop. This parameter setting allows you to start the flywheel operating again without waiting until the flywheel stops completely.

07-13 dEb Function Selection

Default: 0

Settings 0: Disable
1: dEb with auto-acceleration/auto-deceleration, the drive does not output the frequency after the power is restored.
2: dEb with auto-acceleration/ auto-deceleration, the drive outputs the frequency after the power is restored.

📖 dEb (Deceleration Energy Backup) lets the motor decelerate to stop when momentary power loss occurs. When the power loss is instantaneous, use this function to let the motor decelerate to zero speed. If the power recovers at this time, the drive restarts the motor after the dEb return time.

📖 Lv return level: Default value depends on the drive power model.
Frame A, B, C, D = Pr.06-00 + 60 V / 30 V (230V models)
Frame E and above = Pr.06-00 + 80 V / 40 V (230V models)

📖 Lv level: Default is Pr.06-00.

📖 During dEb operation, other protection, such as ryF, ov, oc, occ, and EF may interrupt it, and these error codes are recorded.

- The STOP (RESET) command does not work during the dEb auto-deceleration, and the drive continues decelerating to stop. To make the drive coast to stop immediately, use another function (EF) instead.
- The B.B. function does not work when executing dEb. The B.B. function is enabled after the dEb function finishes.
- Even though the Lv warning does not display during dEb operation, if the DC bus voltage is lower than the Lv level, MO = 10 (Low voltage warning) still operates.
- The following explains the dEb action:
  When the DC voltage drops below the dEb setting level, the dEb function starts to work (soft start relay remains closed), and the drive executes auto-deceleration.

- **Situation 1:** Momentary power loss, or power current too low and unstable, or power supply sliding down because of sudden heavy load.
  Pr.07-13 = 1 and power recovers.

When the power recovers and DC bus voltage exceeds the dEb return level, the drive linearly decelerates to 0 Hz and stops. The keypad displays the ”dEb” warning until you manually reset it, so that you can see the reason for the stop.

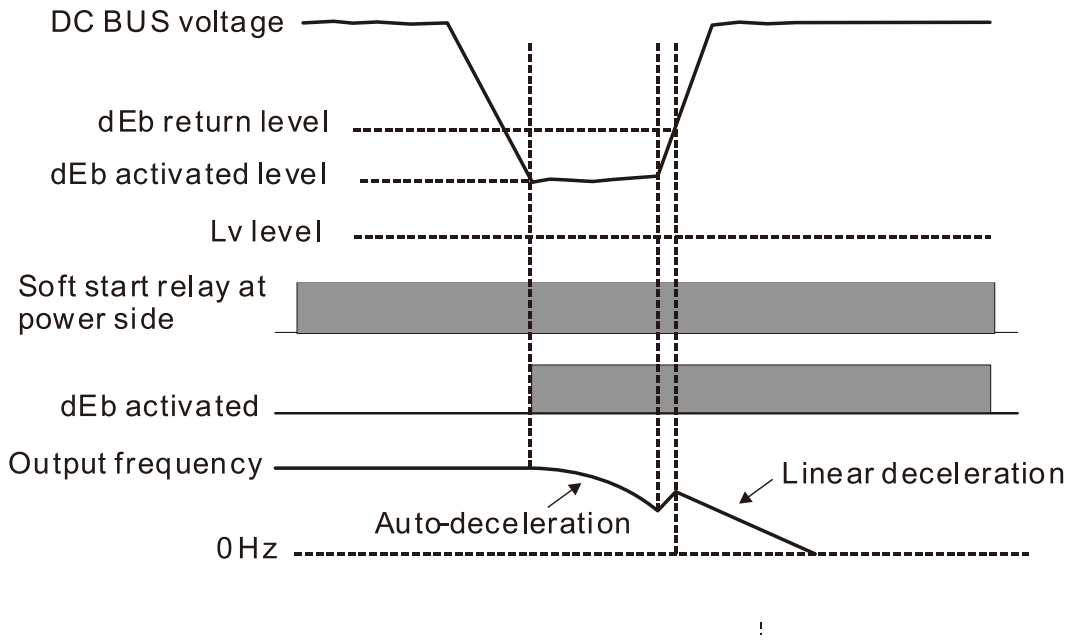

- **Situation 2:** Momentary power loss, or power current too low and unstable, or power supply sliding down because of sudden heavy load.
  Pr.07-13 = 2 and power recovers.

During the dEb deceleration (includes 0 Hz run), if the power recovers higher than dEb return level, the drive maintains the frequency for three seconds and then accelerates again. The dEb warning on the keypad clears automatically.

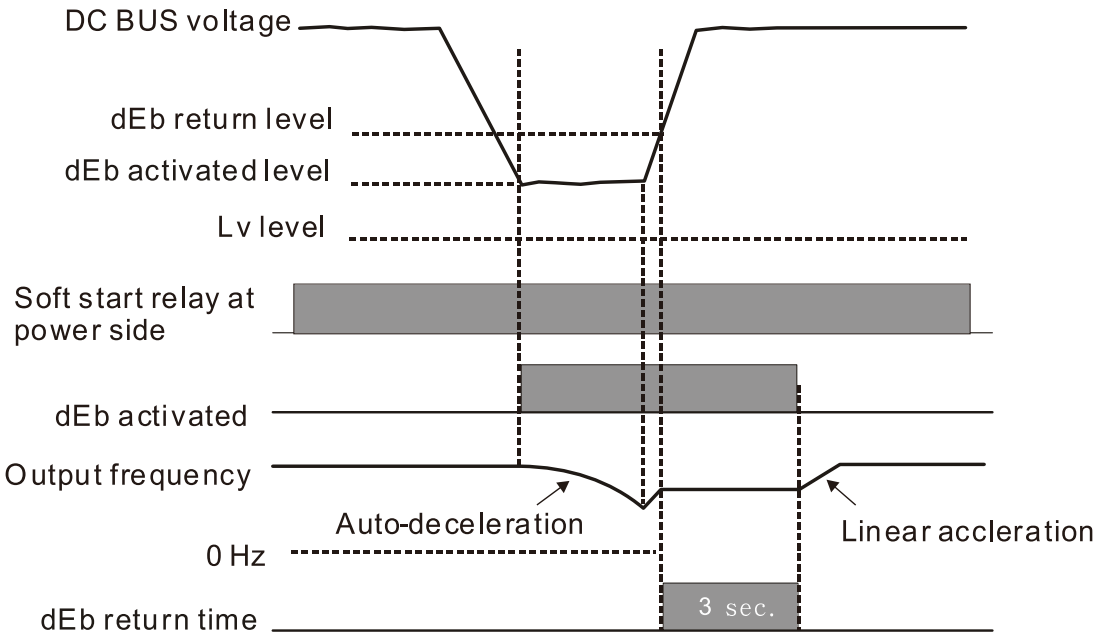

- **Situation 3:** Power supply unexpected shut down or power loss.

  Pr.07-13 = 1 and power does not recover.

The keypad displays the “dEb” warning and stops after decelerating to the lowest running frequency. When the DC bus voltage is lower than the Lv level, the drive disconnects the soft start relay until the power completely runs out.

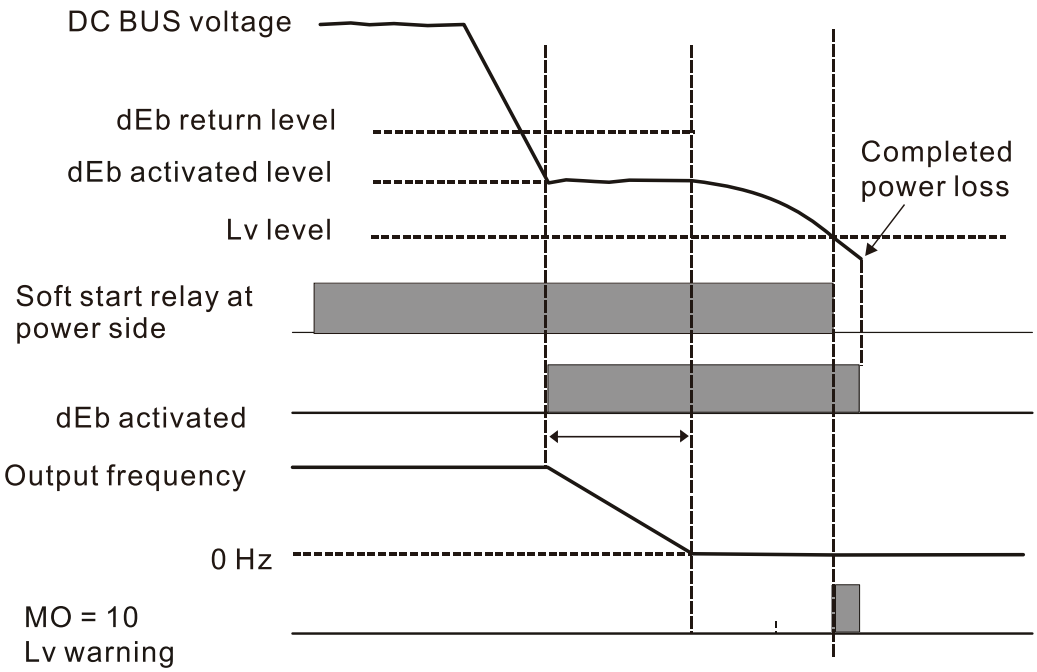

- **Situation 4:** Power supply unexpected shut down or power loss.

  Pr.07-13 = 2 and power does not recover.

The drive decelerates to 0 Hz. The DC bus voltage continues to decrease until the voltage is lower than the Lv level, and then the drive disconnects the soft start relay. The keypad displays “dEb” warning until the drive completely runs out of power.

- **Situation 5:** Pr.07-13 = 2 and power recovers after the DC bus voltage is lower than the Lv level. The drive decelerates to 0 Hz. The DC bus voltage continues to decrease until the voltage is lower than the Lv level, and then the drive disconnects the soft start relay. The soft start relay closes again after the power recovers and the DC bus voltage is higher than the Lv return level. When the DC bus voltage is higher than the dEb return level, the drive maintains the frequency for three seconds and starts to accelerate linearly, and the dEb warning on the keypad clears automatically.

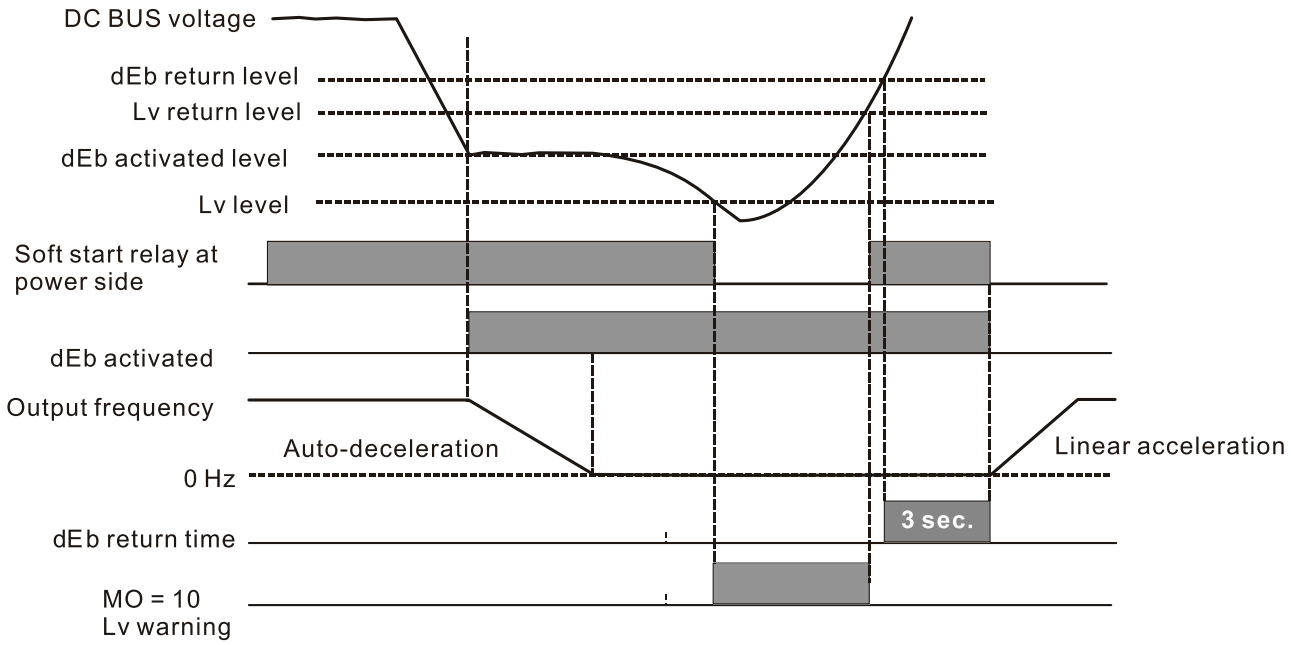

07-15 Dwell Time at Acceleration

Default: 0.00

Settings 0.00–600.00 sec.

07-17 Dwell Time at Deceleration

Default: 0.00

Settings 0.00–600.00 sec.

07-16 Dwell Frequency at Acceleration

Default: 0.00

Settings 0.00–599.00 Hz

07-18 Dwell Frequency at Deceleration

Default: 0.00

Settings 0.00–599.00 Hz

- In heavy load situations, the Dwell temporarily maintains stable output frequency. Use this parameter for cranes, elevators, and so on.
- When the load is heavier, use Pr.07-15–Pr.07-18 to avoid OV or OC protection.

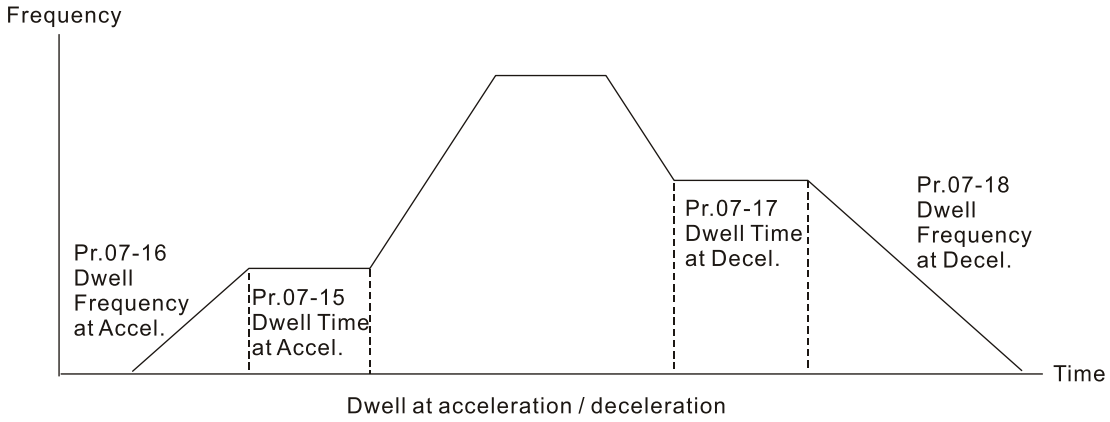

Dwell at acceleration / deceleration

07-19 Fan Cooling Control

Default: 3

Settings 0: Fan is always ON
1: Fan is OFF after the AC motor drive stops for one minute.
2: When the AC motor drive runs, the fan is ON. When the AC motor drive stops, the fan is OFF.
3: Fan turns ON when the IGBT temperature reaches around 60°C
5: Fan turns ON/OFF when the AC motor drive runs/stops and stops at zero speed.

- Use this parameter to control the fan.
- 0: Fan runs immediately when the drive power is turned ON.
- 1: Fan runs when AC motor drive runs. One minute after AC motor drive stops, the fan is OFF.
- 2: Fan runs when AC motor drive runs and stops immediately when AC motor drive stops.
- 3: When temperature of the IGBT or capacitance is higher than 60°C, the fan runs. When the temperature of the IGBT and capacitance both are lower than 40°C, and the motor stop, the fan stops.

07-20 Emergency stop (EF) & force to stop selection

Default: 0

Settings 0: Coast to stop
1: Stop by the first deceleration time
2: Stop by the second deceleration time
3: Stop by the third deceleration time
4: Stop by the fourth deceleration time
5: System deceleration
6: Automatic deceleration

- When the multi-function input terminal is set to EF input (setting 10) or forced to stop (setting 18) and the terminal contact is ON, the drive stops according to the setting of this parameter.

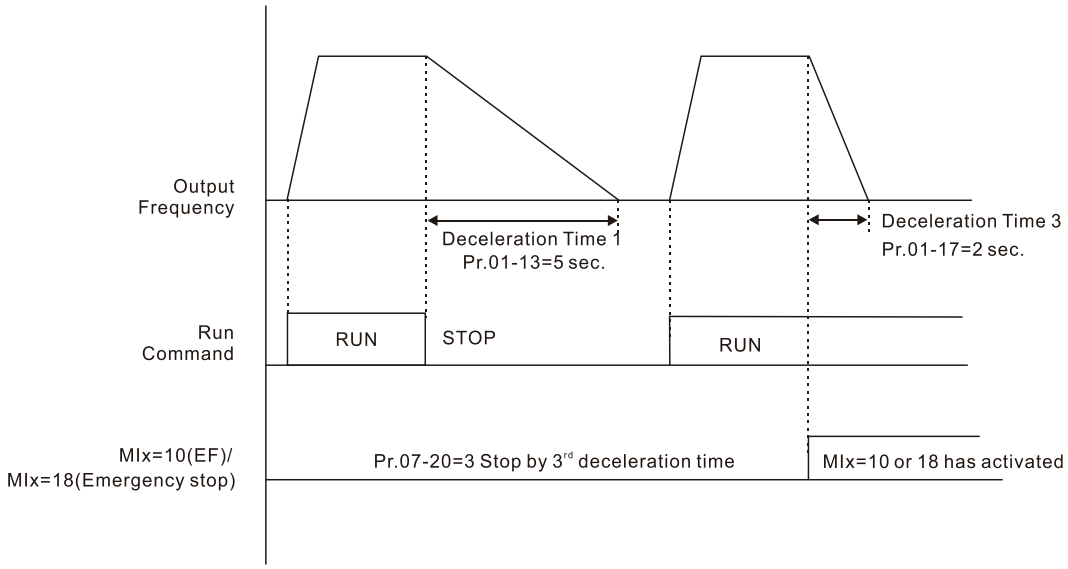

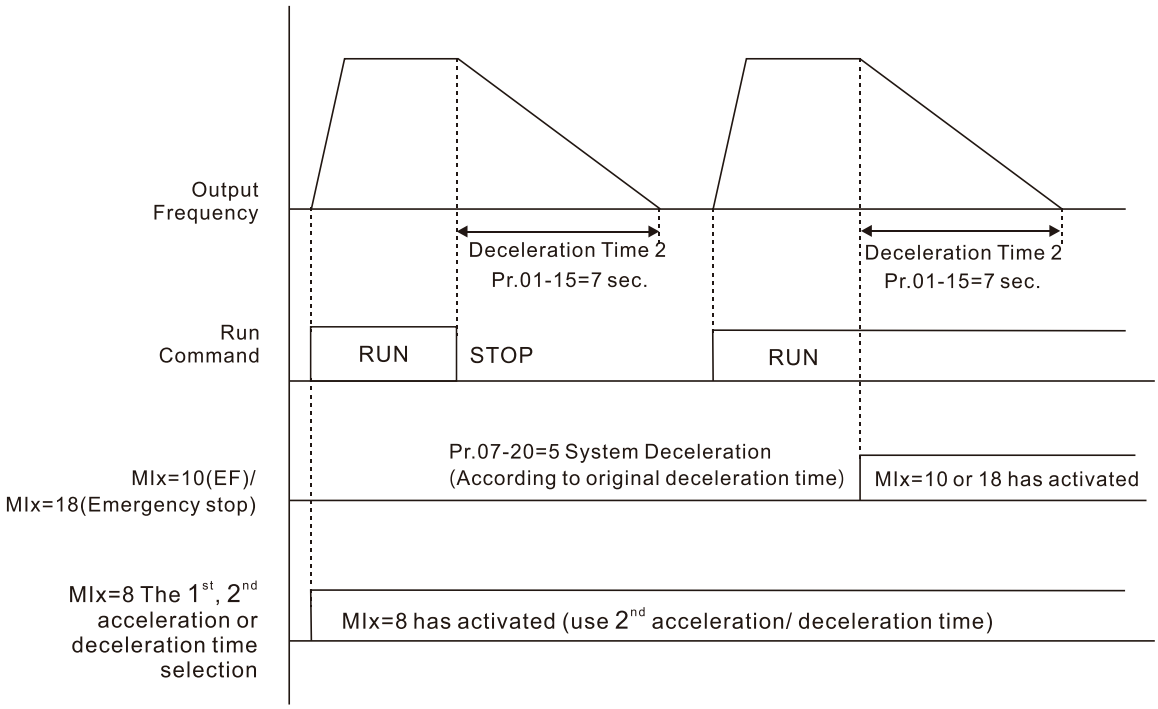

07-21 Automatic Energy-saving Setting

Default: 0

Settings 0: Disable

1: Power factor energy-saving improvement

- When energy-saving is enabled, the motor acceleration operates with full voltage. During constant speed operation, it automatically calculates the best voltage value according to the load power. This function is not suitable for fluctuating loads or loads which are nearly full during operation.
- When the output frequency is constant (that is, constant operation), the output voltage decreases automatically as the load decreases. Therefore, the drive operates with minimum multiplication of voltage and current (electric power).

07-23 Automatic Voltage Regulation (AVR) Function

Default: 0

Settings 0: Enable AVR
1: Disable AVR
2: Disable AVR during deceleration

- The rated voltage of a 220V motor is usually AC 200 V, 60 Hz / 50 Hz, and the input voltage of the AC motor drive may vary from AC 180 V to 264 V, 50 Hz / 60 Hz. Therefore, when the AC motor drive is used without the AVR function, the output voltage is the same as the input voltage. When the motor runs at the voltage exceeding 12–20% of the rated voltage, it causes higher temperatures, damaged insulation, and unstable torque output, which result in losses due to shorter motor lifetime.
- The AVR function automatically regulates the output voltage of the AC motor drive to the motor rated voltage. For example, if the V/F curve is set at AC 200 V, 50 Hz and the input voltage is at AC 200–264 V, then the drive automatically reduces the output voltage to the motor to a maximum of AC 200 V, 50 Hz. If the input voltage is at AC 180–200 V, the output voltage to motor and input power are in direct proportion.
- 0: When the AVR function is enabled, the drive calculates the output voltage according to the actual DC bus voltage. The output voltage does NOT change when the DC bus voltage changes.
- 1: When the AVR function is disabled, the drive calculates the output voltage according to the actual DC bus voltage. The DC bus voltage changes the output voltage, and may cause insufficient or over-current or shock.
- 2: The drive disables the AVR function when decelerating to stop, and may accelerate to brake.
- When the motor ramps to stop, the deceleration time is shorter when setting this parameter to 2 with auto-acceleration and deceleration, and the deceleration is quicker and more stable.

07-24 Torque Command Filter Time

Default: 0.050

Settings 0.001–10.000 sec.

- IMV/F and PMSVC Control Mode only.
- When the setting is too long, the control is stable but the control response is delayed. When the setting is too short, the response is quicker but the control may be unstable. Adjust the setting according to the stability of the control and response times.

07-25 Slip Compensation Filter Time

Default: 0.100

Settings 0.001–10.000 sec.

- IMSVC Control Mode only.
- Change the compensation response time with Pr.07-24 and Pr.07-25.
- If you set Pr.07-24 and Pr.07-25 to 10 seconds, the compensation response time is the slowest; however, the system may be unstable if you set the time too short.

07-26 Torque Compensation Gain
07-71 Torque Compensation Gain (Motor 2)

Default: 1

Settings IM: 0–10 (when Pr.05-33 = 0)
PM: 0–5000 (when Pr.05-33 = 1 or 2)

- IMV/F and PMSVC Control Mode only.
- With a large motor load, a part of drive output voltage is absorbed by the stator winding resistor; therefore, the air gap magnetic field is insufficient. This causes insufficient voltage at motor induction and results in excessive output current but insufficient output torque. Auto-torque compensation can automatically adjust the output voltage according to the load and keep the air gap magnetic fields stable to get the optimal operation.
- In the V/F control, the voltage decreases in direct proportion with decreasing frequency. It reduces the torque decrease at low speed due to the AC while the DC resistor is unchanged. The auto-torque compensation function increases the output voltage at low frequency to get a higher starting torque.
- When the compensation gain is set too high, it may cause motor over-flux and result in a too large output current, overheating the motor or triggering the protection function.
- This parameter affects the output current during operation. The low-speed zone has less impact.
- When the compensation gain is set too large, it may cause motor over-flux and result in a too large output current of the drive, motor overheating or trigger the drive's protection function.

07-27 Slip Compensation Gain
07-72 Slip Compensation Gain (Motor 2)

Default: 0.00

Settings 0.00–10.00 (Default value is 1 in SVC mode)

- IMSVC Control Mode only.
- The induction motor needs constant slip to produce magnetic torque. It can be ignored at higher motor speeds, such as rated speed or 2–3% of slip.
- In operation, the slip and the synchronous frequency are in reverse proportion to produce the same magnetic torque. The slip is larger with the reduction of the synchronous frequency. The motor may stop when the synchronous frequency decreases to a specific value. Therefore, the slip seriously affects the motor speed accuracy at low speed.
- In another situation, when you use an induction motor with the drive, the slip increases when the load increases. It also affects the motor speed accuracy.
- Use this parameter to set the compensation frequency, and reduce the slip to maintain the synchronous speed when the motor runs at the rated current in order to improve the accuracy of the drive. When the drive output current is higher than Pr.05-05 (No-load Current of Induction Motor 1 (A)), the drive compensates the frequency with this parameter.
- This parameter is set to 1.00 automatically when Pr.00-11 (Speed Control Method) is changed from V/F mode to vector mode. Apply the slip compensation after load and acceleration. Increase the compensation value from small to large gradually; add the output frequency with motor rated slip × Pr.07-27 (Slip Compensation Gain) when the motor is at the rated load. If the actual speed

ratio is slower than expected, increase the parameter setting value; otherwise, decrease the setting value.

07-29 Slip Deviation Level

Default: 0

Settings 0.0–100.0%
0: No detection

07-30 Slip Deviation Detection Time

Default: 1.0

Settings 0.0–10.0 sec.

07-31 Slip Deviation Action

Default: 0

Settings 0: Warn and continue operation
1: Fault and ramp to stop
2: Fault and coast to stop
3: No warning

- Parameters Pr.07-29–Pr.07-31 set the allowable slip level / time and the over-slip action when the drive is running.

07-32 Motor Shock Compensation Factor

Default: 1000

Settings 0–10000

- If there are current wave motions in the motor in some specific area, setting this parameter can effectively improve this situation.
- When the current wave motion occurs in low frequency and high-power, increase the value for Pr.07-32.

07-33 Auto-restart Interval of Fault

Default: 60.0

Settings 0.0–6000.0 sec.

- When a reset/restart occurs after a fault, the drive uses Pr.07-33 as a timer and starts counting the number of faults within this time period. Within this period, if the number of faults does not exceed the setting for Pr.07-11, the counting clears and starts from 0 when the next fault occurs.

07-38 PMSVC Voltage Feed Forward Gain

Default: 1.00

Settings 0.50–2.00

- Adjusts the PMSVC voltage feedback forward gain, and to meet the demand of rapid feedback application.
- Pr.07-38 = 1.00 means forward feedback = Ke × motor rotor speed
- Refer to Section 12-2 “PMSVC adjustment” for details.

07-62 dEb Gain (Kp)

Default: 8000

Settings 0–65535

07-63 dEb Gain (Ki)

Default: 150

Settings 0–65535

- Sets the PI gain of DC bus voltage controller when the dEb function activates.
- If the DC bus voltage drops too fast, or the speed oscillation occurs during deceleration after the dEb function activates, adjust Pr.07-62 and Pr.07-63. Increase the Kp setting to quicken the control response, but the oscillation may occur if the setting is too large. Use Ki parameter to decrease the steady-state error to zero, and increase the setting to quicken the response speed.

08 High-function PID Parameters

You can set this parameter during operation.

08-00 Terminal Selection of PID Feedback

Default: 0

Settings
0: No function
1: Negative PID feedback: by analog input (Pr.03-00)
4: Positive PID feedback: by analog input (Pr.03-00)
7: Negative PID feedback: by communication protocol
8: Positive PID feedback: by communication protocol

- Negative feedback means:
  + target value - feedback. The detection value increases by increasing the output frequency.
- Positive feedback means:
  - target value + feedback. The detection value decreases by increasing the output frequency.
- When Pr.08-00 ≠ 7 neither ≠ 8, the input value is disabled. The value of the setting does not remain the same after the drive is off.

1. Common applications for PID control:
   - Flow control: Use a flow sensor to feedback the flow data and perform accurate flow control.
   - Pressure control: Use a pressure sensor to feedback the pressure data and perform precise pressure control.
   - Air volume control: Use an air volume sensor to feedback the air volume data to achieve excellent air volume regulation.
   - Temperature control: Use a thermocouple or thermistor to feedback temperature data for comfortable temperature control.
   - Speed control: Use a speed sensor or encoder to feedback motor shaft speed or input another machine speed as a target value for closed loop speed control of the master-slave operation.
2. PID control loop:

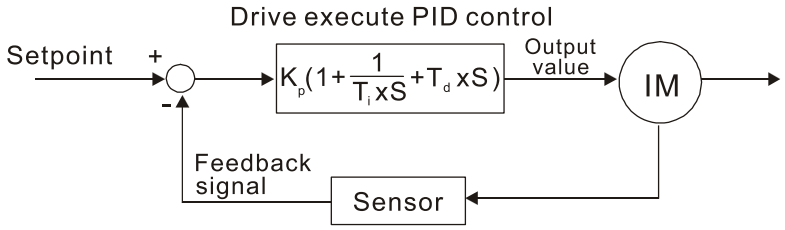

3. Concept of PID control:
   - Proportional gain (P):

   The output is proportional to input. With only proportional gain control, there is always a steady-state error.
   - Integral time (I):

   The controller output is proportional to the integral of the controller input. To eliminate the steady-state error, add an “integral part” to the controller. The integral time controls the relation between the integral part and the error. The integral part increases over time even if the error is small. It gradually increases the controller output to eliminate the error until it is zero. This stabilizes the system without a steady-state error by using proportional gain control and integral time control.

- Differential control (D):

The controller output is proportional to the differential of the controller input. During elimination of the error, oscillation or instability may occur. Use the differential control to suppress these effects by acting before the error. That is, when the error is near 0, the differential control should be 0. Use proportional gain (P) and differential control (D) to improve the system state during PID adjustment.

4. Using PID control in a constant pressure pump feedback application:
   Set the application's constant pressure value (bar) to be the set point of PID control. The pressure sensor sends the actual value as the PID feedback value. After comparing the PID set point and PID feedback, an error displays. The PID controller calculates the output by using proportional gain (P), integral time (I) and differential time (D) to control the pump. It controls the drive to use a different pump speed and achieves constant pressure control by using a 4–20 mA signal corresponding to 0–10 bar as feedback to the drive. A–b

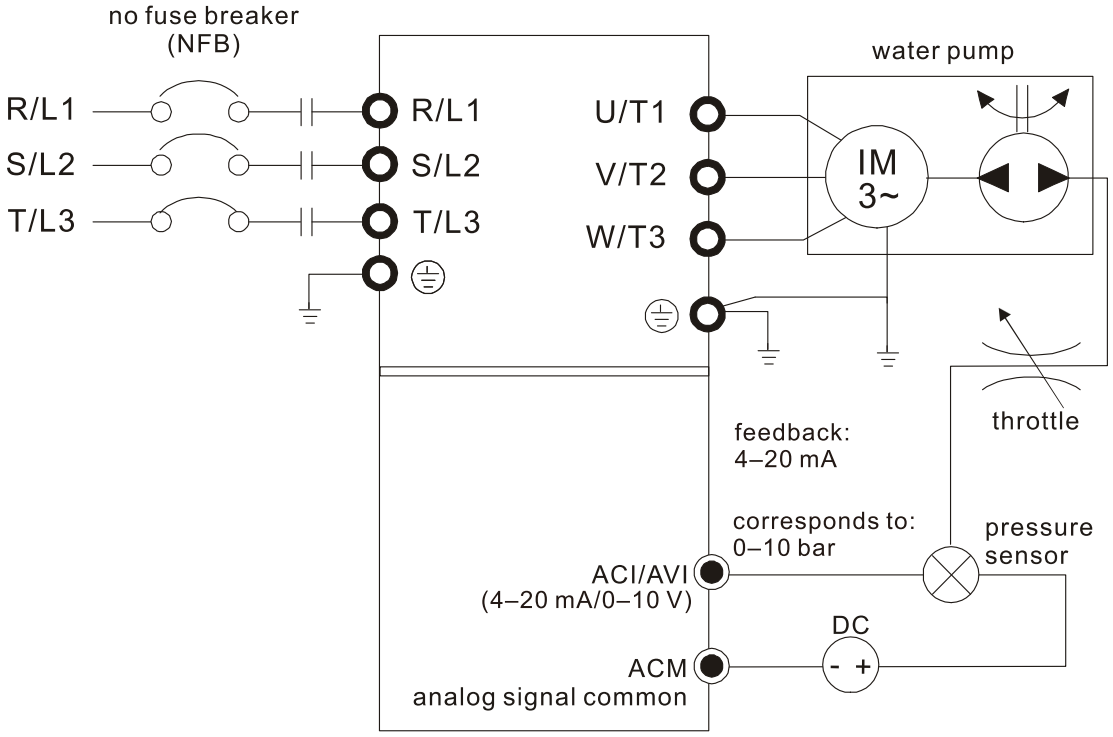

- Pr.00-04 = 10 (display PID feedback (b) (%))
- Pr.01-12 Acceleration Time is set according to actual conditions.
- Pr.01-13 Deceleration Time is set according to actual conditions.
- Pr.00-21 = 0 to operate through the digital keypad
- Pr.00-20 = 0, the digital keypad controls the set point.
- Pr.08-00 = 1 (negative PID feedback from analog input)
- AVI analog input Pr.03-00 = 5, PID feedback signal.
- Pr.08-01–08-03 is set according to actual conditions.
  If there is no vibration in the system, increase Pr.08-01 (Proportional Gain (P))
  If there is no vibration in the system, decrease Pr.08-02 (Integral Time (I))
  If there is no vibration in the system, increase Pr.08-03 (Differential Time (D))
- Refer to Pr.08-00–08-21 for PID parameter settings.

08-01 Proportional Gain (P)

Default: 1.00

Settings 0.0–1000.0 (When Pr.08-23 bit1 = 0)
0.00–100.00 (When Pr.08-23 bit1 = 1)

- 1.0: Kp gain is 100%; if the setting is 0.5, Kp gain is 50%.
- Eliminates the system error; usually used to decrease the error and get faster response speed. If you set the value too high, it may cause system oscillation and instability.
- If you set the other two gains (I and D) to zero, proportional control is the only effective parameter.

08-02 Integral Time (I)

Default: 1.00

Settings 0.00–100.00 sec.

- Use the integral controller to eliminate the error during stable system operation. The integral control does not stop working until the error is zero. The integral is affected by the integral time. The smaller the integral time, the stronger the integral action. It is helpful to reduce overshoot and oscillation for a stable system. Accordingly, the speed to lower the steady-state error decreases. The integral control is often used with the other two controls for the PI controller or PID controller.
- Sets the integral time of the I controller. When the integral time is long, there is a small I controller gain, with slower response and slow external control. When the integral time is short, there is a large I controller gain, with faster response and rapid external control.
- When the integral time is too short, it may cause system oscillation.
- Set Integral Time to 0.00 to disable the parameter Pr.08-02.

08-03 Differential Time (D)

Default: 0.00

Settings 0.00–1.00 sec.

- Use the differential controller to show the system error change, as well as to preview the change in the error. You can use the differential controller to eliminate the error in order to improve the system state. Using a suitable differential time can reduce overshoot and shorten adjustment time; however, the differential operation increases noise interference. Note that a too large differential causes more noise interference. In addition, the differential shows the change and the differential output is 0 when there is no change.
  Note that you cannot use the differential control independently. You must use it with the other two controllers for the PD controller or PID controller.
- Sets the D controller gain to determine the error change response. Using a suitable differential time reduces the P and I controllers overshoot to decrease the oscillation for a stable system. A differential time that is too long may cause system oscillation.
- The differential controller acts on the change in the error and cannot reduce the interference. Do not use this function when there is significant interference.

08-04 Upper Limit of Integral Control

Default: 100.0

Settings 0.0–100.0%

- Defines an upper bound for the integral gain (I) and therefore limits the master frequency. The formula is:
- Integral upper bound = Maximum Operation Frequency (Pr.01-00) x (Pr.08-04%). An excessive integral value causes a slow response due to sudden load changes and may cause motor stall or machine damage.

08-05 PID Output Command Limit (Positive Limit)

Default: 100.0

Settings 0.0–100.0%

- Defines the percentage of the output frequency limit during the PID control. The formula is Output Frequency Limit = Maximum Operation Frequency (Pr.01-00) × Pr.08-05%.

08-06 PID Feedback Value by Communication Protocol

Default: 0.00

Settings -200.00–200.00%

- Use communication to set the PID feedback value when the PID feedback input is set to communication (Pr.08-00 = 7 or 8).

08-07 PID Delay Time

Default: 0.0

Settings 0.0–2.5 sec.

08-20 PID Mode Selection

Default: 0

Settings 0: Serial connection
1: Parallel connection

- 0: Use conventional PID control structure.
  1: The proportional gain, integral gain and differential gain are independent. You can customize the P, I and D value to fit your application.
- Pr.08-07 determines the primary low pass filter time when in PID control. Setting a large time constant may slow down the drive's response rate.
- PID control output frequency is filtered with a primary low pass function. This function can filter a mix of frequencies. A long primary low pass time means the filter degree is high and a short primary low pass time means the filter degree is low.
- Inappropriate delay time setting may cause system error.
- PI Control:

  Controlled only by the P action, so the deviation cannot be entirely eliminated. In general, to eliminate residual deviations, use the P + I controls. When you use the PI control, it eliminates the deviation caused by the targeted value changes and the constant external interferences. However, if the I action is too powerful, it delays the response when there is rapid variation. You can use the P action by itself to control the loading system with the integral components.

PD Control:

When deviation occurs, the system immediately generates an operation load that is greater than the load generated only by the D action to restrain the deviation increment. If the deviation is small, the effectiveness of the P action decreases as well. The control objects include applications with integral component loads, which are controlled by the P action only. Sometimes, if the integral component is functioning, the whole system may vibrate. In this case, use the PD control to reduce the P action's vibration and stabilize the system. In other words, this control is useful with no brake function's loading over the processes.

PID Control:

Use the I action to eliminate the deviation and the D action to reduce vibration; then combine this with the P action for the PID control. Use the PID method for a control process with no deviations, high accuracy, and a stable system.

Serial connection

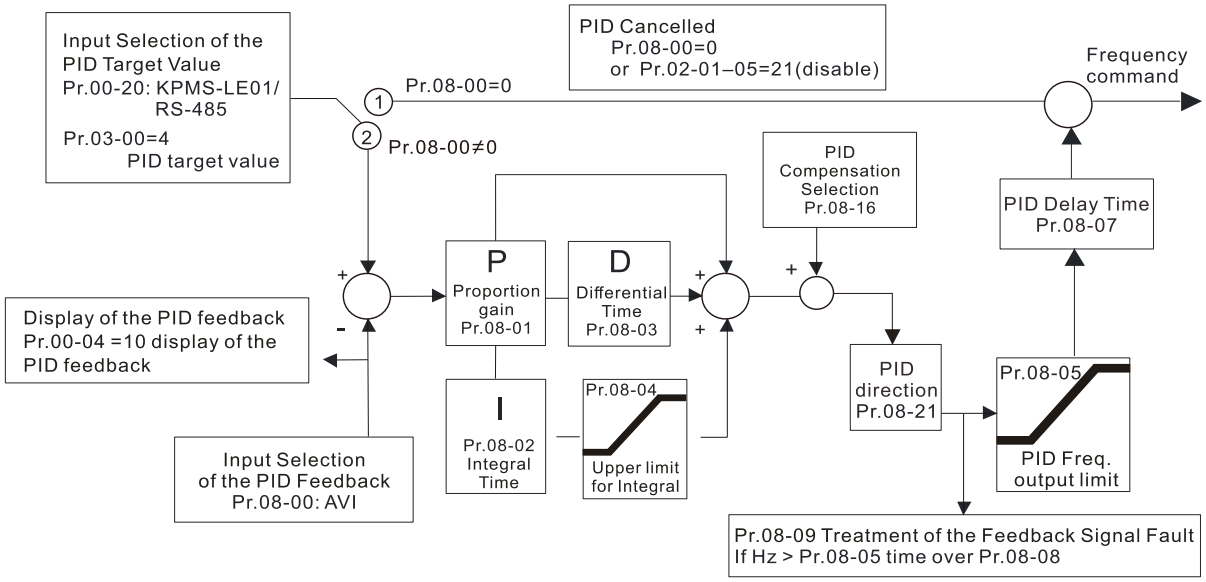

Parallel connection

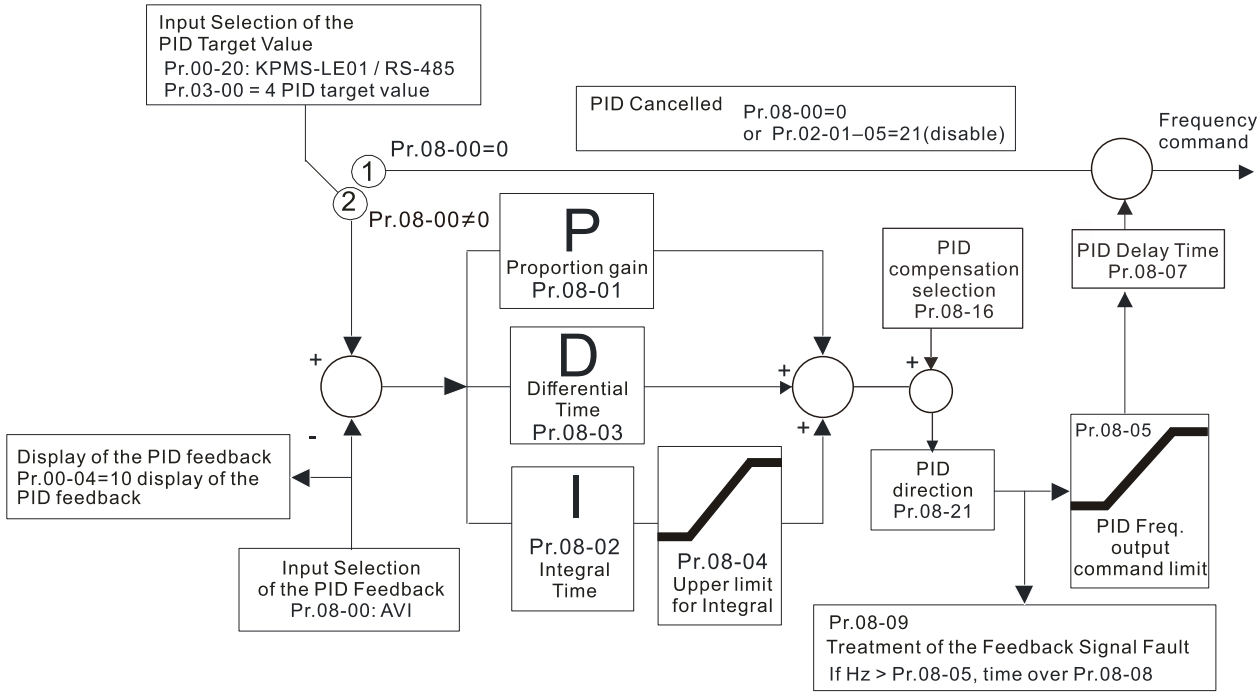

08-08 Feedback Signal Detection Time

Default: 0.0

Settings 0.0–3600.0 sec.

- Pr.08-08 is valid only for Pr.03-28 = 2 (4–20 mA).
- This parameter sets the detection time for abnormal PID signal feedback. Setting the detection time to 0.0 disables the detection function.

08-09 Feedback Signal Fault Treatment

Default: 0

Settings 0: Warn and continue operation
1: Fault and ramp to stop
2: Fault and coast to stop
3: Warn and operate at last frequency

- This parameter is valid only for Pr.03-28 = 2 (4–20 mA)..
- The AC motor drive acts when the analog PID feedback is abnormal.

08-10 Sleep Level

Default: 0.00

Settings 0.00–599.00 Hz / 0.00~200.00%

- Determines the sleep frequency, and if the sleep time and the wake-up frequency are enabled or disabled.
  Pr.08-10 = 0: Disabled
  Pr.08-10 = ≠ 0: Enabled

08-11 Wake-up Level

Default: 0.00

Settings 0.00–599.00 Hz / 0.00~200.00%

- Sleep and wake-up function are started up according to the setting of Pr.08-10.
  Pr.08-10 = 0, not start up; Pr.08-10 ≠ 0, start up.
- When Pr.08-18 = 0, the unit for Pr.08-10 and that for Pr.08-11 switch to frequency. The settings are between 0.00–599.00 Hz.
- When Pr.08-18 = 1, the unit for Pr.08-10 and that for Pr.08-11 switch to percentage. The settings then are between 0.00–200.00%.The percentage is based on the current command value, not the maximum value. For example, if the maximum value is 100 kg, and the current value is 30 kg, then if Pr.08-11 = 40%, the value is 12 kg.

08-12 Sleep Delay Time

Default: 0.0

Settings 0.0–6000.0 sec.

- When the Frequency command is smaller than the sleep frequency and less than the sleep time, the Frequency command is equal to the sleep frequency. However, the Frequency command remains at 0.00 Hz until the Frequency command becomes equal to or larger than the wake-up frequency.

08-13 PID feedback signal error deviation level

Default: 10.0

Settings 1.0–50.0%

08-14 PID feedback signal error deviation time

Default: 5.0

Settings 0.1–300.0 sec.

08-15 PID feedback signal filter time

Default: 5.0

Settings 0.1–300.0 sec.

When the PID control function is normal, it should calculate the value within a period of time that is close to the target value.

Refer to the PID control diagram for details. When executing PID feedback control, if |PID reference target value – detection value| > Pr.08-13 PID Deviation Level and exceeds Pr.08-14 setting, it is judged as a PID control fault, and the multi-function output MO = 15 (PID feedback error) activates.

08-16 PID Compensation Selection

Default: 0

Settings 0: Parameter setting
1: Analog input

0: The setting for Pr.08-17 gives the PID compensation value.

08-17 PID Compensation

Default: 0

Settings -100.0–100.0%

The PID compensation value = maximum PID target value × Pr.08-17. For example, if Pr.01-00 the maximum operation frequency = 60 Hz, and Pr.08-17 = 10.0%, the PID compensation value increases the output frequency 6.00 Hz. 60.00 Hz × 100.00% × 10.0% = 6.00 Hz

08-18 Sleep Mode Function Setting

Default: 0

Settings 0: Refer to PID output command
1: Refer to PID feedback signal

0: The unit for Pr.08-10 and that for Pr.08-11 switch to frequency. The settings then are between 0.00–599.00 Hz.

1: The unit for Pr.08-10 and that for Pr.08-11 switch to percentage. The settings then are between 0.00–200.00%.

08-19 Wake-up Integral Limit

Default: 50.0

Settings 0.0–200.0%

Reduces the reaction time from sleep to wake-up.

The wake-up integral limit for the drive prevents suddenly running at high speed when the drive wakes up. The wake-up integral frequency limit = (Pr.01-00 × Pr.08-19%)

08-21 Enable PID to Change the Operation Direction

Default: 0

Settings 0: Operation direction can be changed
1: Operation direction cannot be changed

08-22 Wake-up Delay Time

Default: 0.00

Settings 0.00–600.00 sec.

📖 Refer to Pr.08-18 for more information.

08-23 PID Control Flag

Default: 2

Settings bit 0 = 1, PID running in reverse follows the setting for Pr.00-23.
bit 0 = 0, PID running in reverse refers to PID's calculated value.
bit 1 = 1, two decimal place of PID Kp
bit 1 = 0, one decimal place of PID Kp

📖 bit 0 = 1: Enable PID running in reverse.

📖 bit 0 = 0: If the PID calculated value is positive, the direction is forward. If the PID calculated value is negative, the direction is reverse.

📖 When the setting of bit 1 changes, the Kp gain does not change. For example: Kp = 6, when Pr.08-23 bit 1 = 0, Kp = 6.0; when Pr.08-23 bit 1 = 1, Kp = 6.00.

There are three scenarios for sleep and wake-up frequency.

1) Frequency Command (PID is not in use, Pr.08-00 = 0, only works in VF mode)

When the output frequency ≤ the sleep frequency, and the drive reaches the preset sleep time, then the the drive is in sleep mode (0 Hz). When the frequency command reaches the wake-up frequency, the drive starts to count the wake-up delay time. When the drive reaches the wake-up delay time, it starts to catch up to reach the frequency command value by the acceleration time.

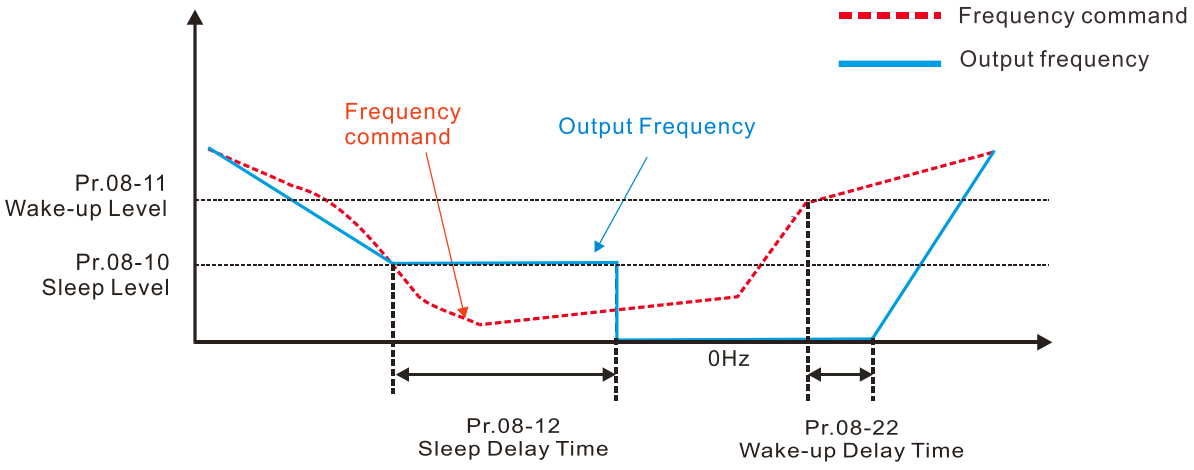

2) Frequency Command Calculation of the Internal PID (Use PID, Pr.08-00 ≠ 0 and Pr.08-18 = 0)

When the PID calculation Frequency command reaches the sleep frequency, the drive starts to count the sleep time and the output frequency starts to decrease. If the drive exceeds the preset sleep time, then the drive is in sleep mode (0Hz). If the drive does not reach the preset sleep time,

it remains at the lower frequency limit (if there is a preset lower limit.), or it remains at the minimum output frequency set at Pr.01-07 and waits until it reaches the sleep time before it going into sleep mode (0Hz). When the PID calculated Frequency command reaches the wake-up frequency, the drive starts to count the wake-up delay time. Once it reaches the wake-up delay time, the drive starts to catch up to reach the PID Frequency command value by the acceleration time.

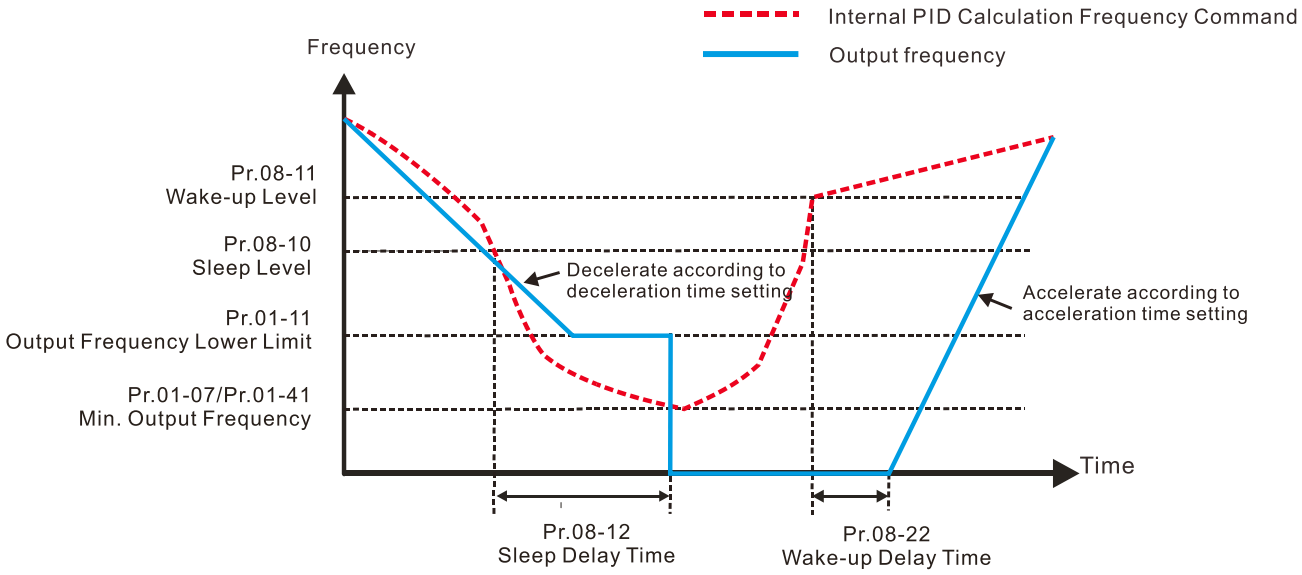

3) PID Feedback Rate Percentage (Use PID, Pr.08-00 ≠ 0 and Pr.08-18 = 1)

When the PID feedback value reaches the sleep level percentage, the drive starts to count the sleep time and the output frequency starts to decrease. If the drive exceeds the preset sleep time, then the drive is in sleep mode (0 Hz). If the drive does not reach the preset sleep time, it remains at the lower frequency limit (if there is a preset of lower limit.), or it remains at the minimum output frequency set for Pr.01-07 and waits until it reaches the sleep time before going into sleep mode (0 Hz).

When the PID feedback value reaches the wake-up percentage, the drive starts to count the wake-up delay time. Once it reaches the wake-up delay time, the drive starts to catch up to reach the PID Frequency command value by the acceleration time.

Example 01: PID negative feedback

- Pr.08-10 must > Pr.08-11
- 30kg is the reference
- Set the parameter:

  Pr.03-00 = 5 (AVI is PID feedback)

  Pr.08-00 = 1 (PID negative feedback: AVI simulation input function select)

  Pr.08-10 = 40% (Sleep reference: 12kg = 40%*30kg)

  Pr.08-11 = 20% (Wake-up reference: 6kg = 20%*30kg)

  Case 01: If feedback >12kg, frequency decreases.

  Case 02: If feedback <6kg, frequency increases.

Area	PID Physical quantity
Sleep area	> 12 kg, the drive goes into sleep, the motor goes into sleep
Excessive area	between 6 kg and 12 kg, the drive remains in current state
Wake-up area	< 6 kg, the drive wakes-up, the motor wakes-up

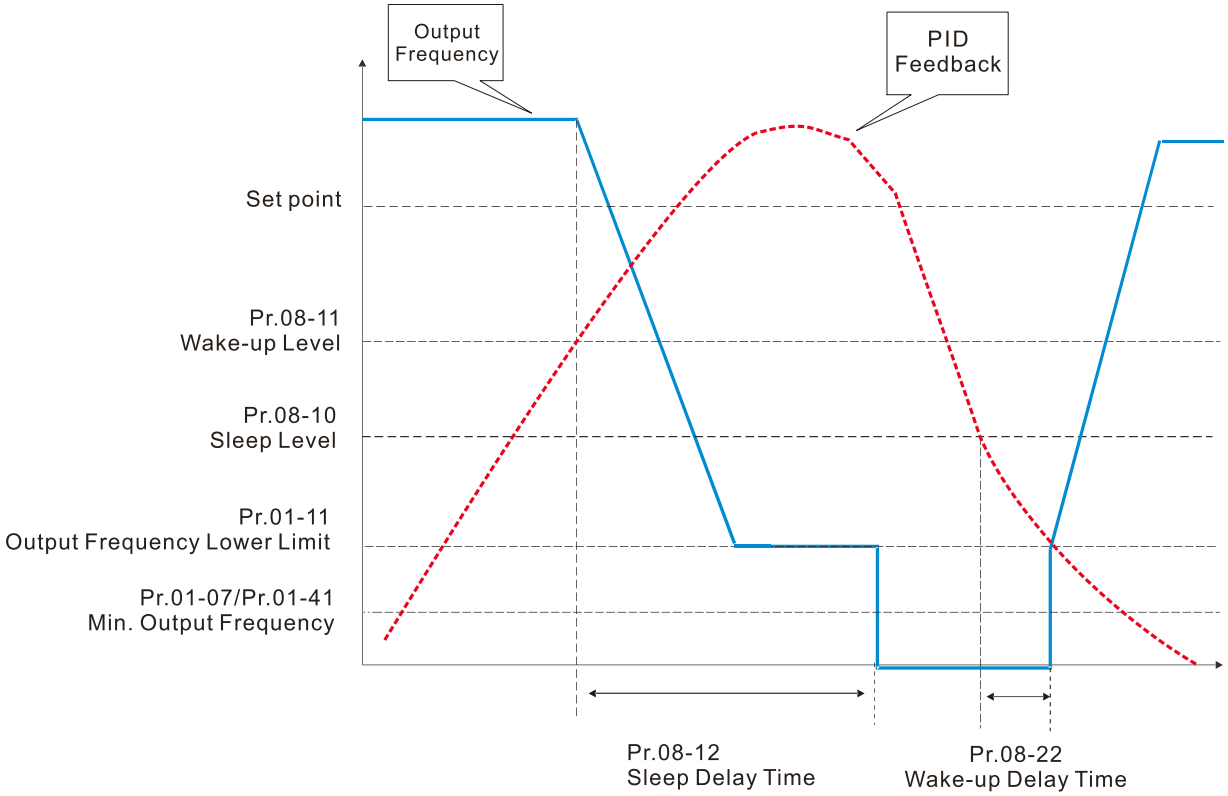

Example 02: PID positive feedback

- Pr.08-10 must < Pr.08-11
- 30kg is the reference
- Set the parameter:

  Pr.03-00 = 5 (AVI is PID feedback)

  Pr.08-00 = 4 (PID positive feedback: AVI simulation input function select)

  Pr.08-10 = 110% (Sleep reference: 33kg = 110%*30kg)

  Pr.08-11 = 120% (Wake-up reference: 36kg = 120%*30kg)

  Case 01: If feedback <33kg, frequency decreases.

  Case 02: If feedback >36kg, frequency increases.

Area	PID Physical quantity
Sleep area	> 36 kg, the drive goes into sleep, the motor goes into sleep
Excessive area	between 33 kg and 36 kg, the drive remains in the current state
Wake-up area	< 33 kg, the drive wakes-up

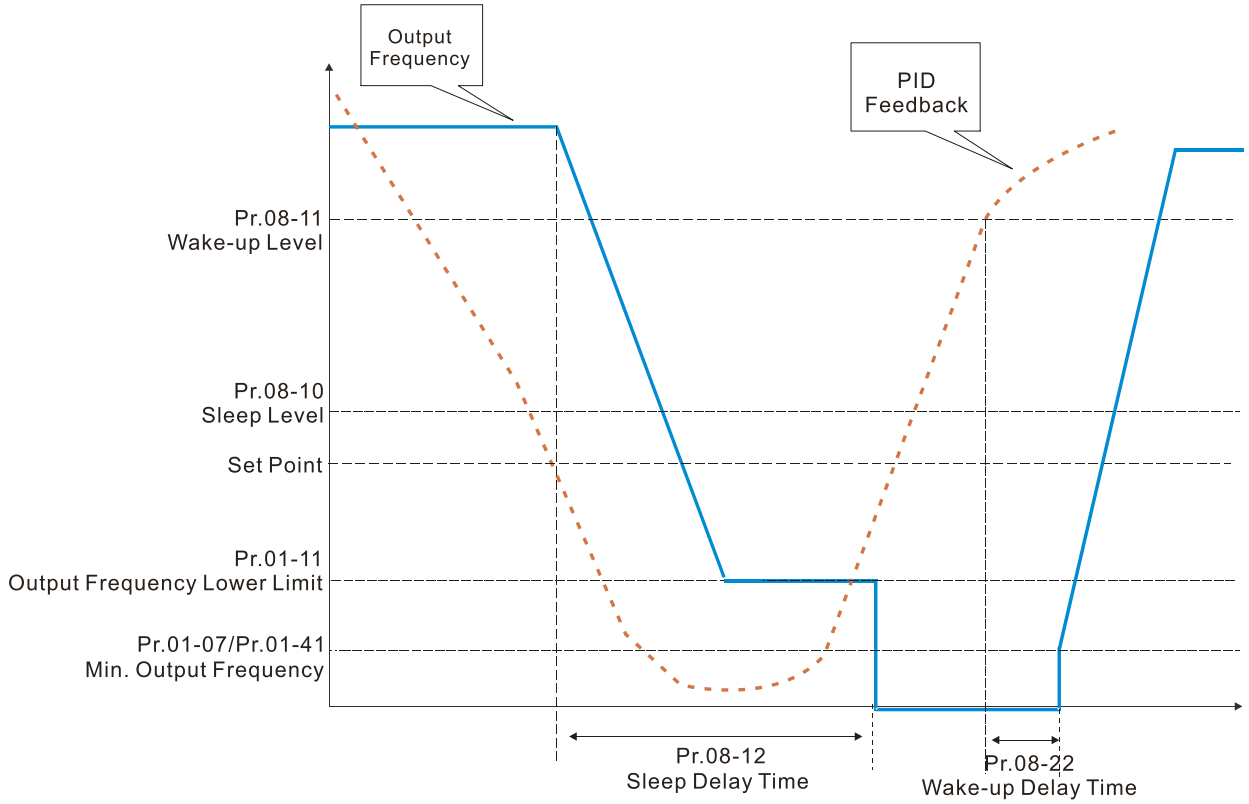

08-26 PID Output Command Limit (Reverse Limit)

Default: 100.0

Settings 0.0–100.0%

When PID enables the reverse direction, the PID output amount is a negative value, and the PID output value is limited by the setting for Pr.08-26. Use this function with Pr.08-21.

08-27 Acceleration / deceleration time for PID command

Default: 0.00

Settings 0.00–655.35 sec.

0.00 seconds: Disables the PID acceleration/deceleration command, and the target value is equal to the PID command.

Not equal to 0.00 seconds: Enables the PID acceleration/deceleration command. For PID acceleration and deceleration, when the PID target value changes, the command value increment/decrement is executed according to this parameter.

08-31 Proportional gain 2

Default: 1.00

Settings 0.0–1000.0 (when Pr.08-23 setting bit1 = 0)
0.00–100.00 (when Pr.08-23 setting bit1 = 1)

08-32 Integral time 2

Default: 1.00

Settings 0.00–100.00 sec.

08-33 Differential time 2

Default: 0.00

Settings 0.00–1.00 sec.

08-61 Feedback of PID Physical Quantity Value

Default: 99.9

Settings 1.0–99.9

08-62 Treatment of the Erroneous PID Deviation Level

Default: 0

Settings 0: Warn and keep operating (no treatment)
1: Fault and coast to stop
2: Fault and ramp to stop
3: Ramp to stop and restart after time set at Pr.08-63
(Without displaying fault and warning)
4: Ramp to stop and restart after time set at Pr.08-63. The number of times of restart depends on the setting for Pr.08-64.

08-63 Delay Time for Restart of Erroneous PID Deviation Level

Default: 60

Settings 1–9999 sec.

08-64 Number of times of restart after PID Error

Default: 0

Settings 0–1000 times

08-65 PID target value source

Default: 0

Settings 0: Frequency command (Pr.00-20, Pr.00-30)
1: Pr.08-66 setting
2: RS-485 serial communication
3: External analog input (refer to Pr.03-00)
6: Communication card (does not include CANopen card)
7: Digital keypad dial

- Selects the target value source for PID controller.
- When Pr.08-65 = 0, the maximum operating frequency 01-00 is 60Hz, the error is 100%, and Pr.08-01 = 1.00, the output frequency is "1" times of the Pr.01-00 maximum operating frequency, therefore, the output frequency = 60 × 100% × 1 = 60 Hz.
  Calculation formula:
  Output frequency = Fmax (Pr.01-00) × error% ((PID reference value (Pr.00-20 / Pr.00-30) - PID feedback (Pr.08-00)) × Pr.08-01.
- When Pr.08-65 ≠ 0, the internal calculation of Proportional gain will be reduced by 100 times, that is, when Pr.01-00 Fmax = 60Hz, error = 100%, Pr.08-01 = 1.00, the output frequency is Pr.01-00 Fmax "0.01" times, therefore, the output frequency = 60 × 100% × 0.01 = 0.6Hz.
  Calculation formula:
  Output frequency = Fmax (Pr.01-00) × error% ((PID reference value (Pr.08-66) - PID feedback value (Pr.08-00)) × Pr.08-01 × 0.01.

When Pr.08-65 = 0, PID controller architecture diagram as shown below:

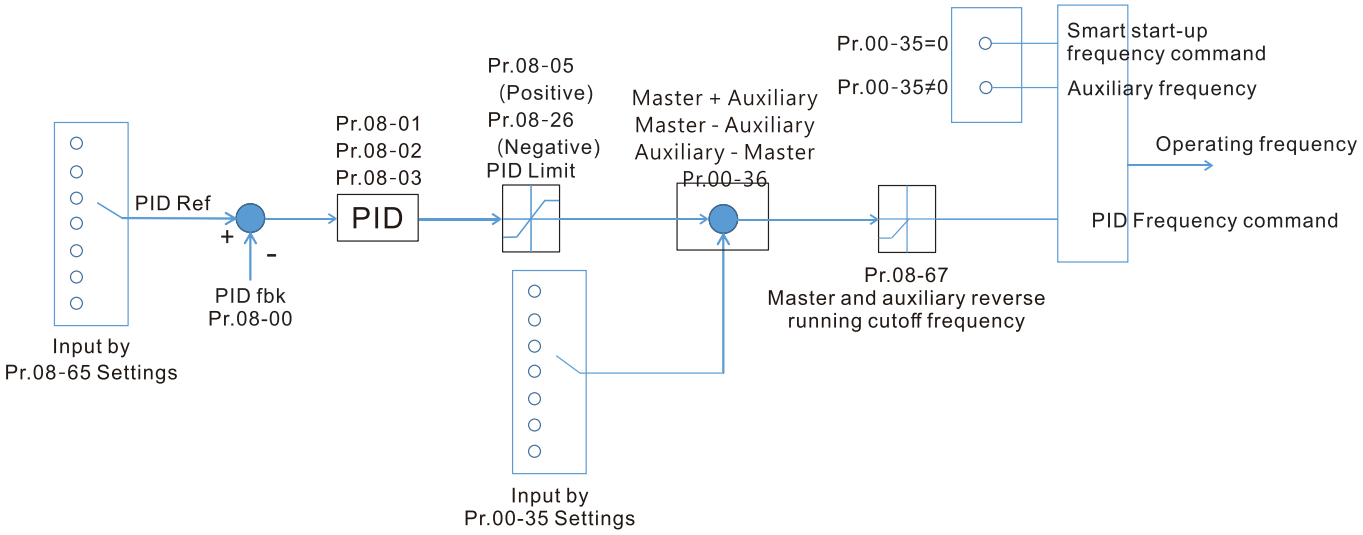

When Pr.08-65 ≠ 0, PID controller architecture diagram as shown below:

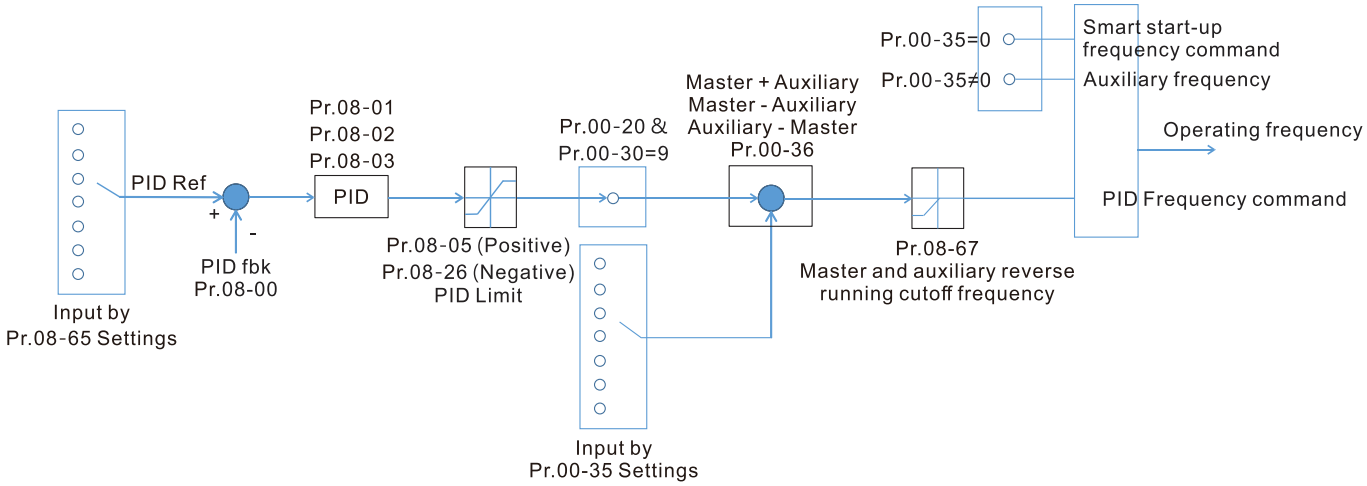

When Pr.08-65 is not set to 0, Pr.00-20 is automatically set to 9.

When Pr.08-65 is set to 1, PID command can be setting by Pr.08-66; when Pr.08-65 is not set to 1, PID command is displayed from Pr.08-66.

If Pr.08-65 selects 2, 4, and 6, the corresponding communication address is C2003H.

08-66 PID target value setting

Default: 50.00

Settings -100.00–100.00%

The target value setting of PID controller (Pr.08-66) is a relative value

08-67 Master and auxiliary reverse running cutoff frequency

Default: 10.0

Settings 0.0–100.0%

100% corresponds to Pr.01-00 the Maximum operation frequency

In some cases, it is only possible for the PID to control the value setting and the feedback in the same situation when the PID output frequency is negative (the motor is reversed). However, an excessively high reversal frequency is not allowed in some cases, and Pr.08-67 is used to determine the upper limit of the reversal frequency

08-68 PID deviation limit

Default: 0.00

Settings 0.00–100.00%

- When Pr.08-68 is not set to 0, the PID deviation limit function is enabled.
- When PID deviation ≤ PID deviation limit, PID stops adjusting action. It means the PID output frequency maintains the previous value and this function is effective for some closed-loop control applications.

08-69 Integral separation level

Default: 0.00

Settings 0.00–100.00%

- Reduces overshoot when overshoot occurs in the PID feedback at start-up.
- When Pr.08-69 is not set to 0, the integral separation function is enabled.
- The benchmark for the integral separation level is the PID error%.
- The integral separation function activates only once at start-up.
- When PID deviation ≥ Pr.08-69, the integral effect is cancelled to avoid the increasing system overshoot due to the integral effect. When PID deviation is smaller than Pr.08-69, the integral effect is activated to eliminate the steady-state error.

08-70 Smart start-up level

Default: 5.00

Settings 0.00–100.00%

08-71 Smart start-up frequency command

Default: 0.00

Settings 0.00–599.00 Hz

08-72 Smart start-up acceleration time

Default: 3.00

Settings 0.00–600.00 sec.

- When Pr.08-71 is not set to 0, the smart start function is enabled.
- The benchmark for the smart start level is the percentage of PID deviation.
- Use the smart start-up function to reduce overshoot when overshoot occurs in the PID feedback at start-up. The smart start-up activates only once at start-up.
- When the smart start-up function is enabled, it starts with the Pr.08-71 frequency and Pr.08-72 acceleration time (Pr.08-72 acceleration time is the time that it accelerates to Pr.08-71). When the PID deviation is smaller than Pr.08-70, it switches to the normal PID control (the smart start-up frequency is filled into the PID integral when switching to PID control to avoid discontinuous frequency).

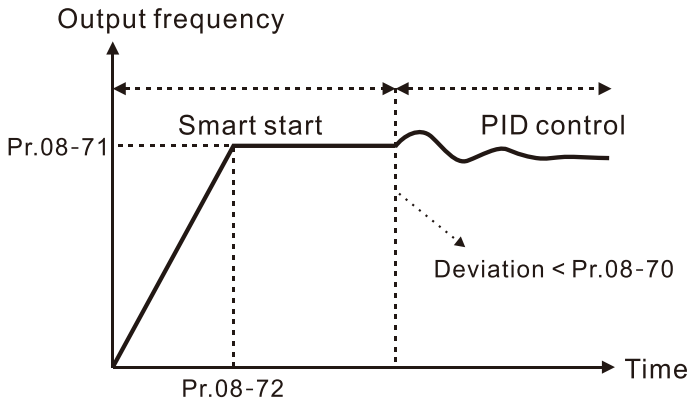

08-75 PID2 parameter switch condition

Default: 0

Settings 0: No switching (refer to Pr.08-01–Pr.08-03)
1: Auto-switch based on the output frequency
2: Auto-switch based on the deviation

08-76 PID2 parameter switch deviation 1

Default: 10.00

Settings 0.00–Pr.08-77%

08-77 PID2 parameter switch deviation 2

Default: 40.00

Settings Pr.08-76–100.00%

- A set of PID parameters cannot meet the requirements of the entire running process in some applications. Use Pr.08-75 to switch to the second group of PID parameter Pr.08-31–Pr.08-33. The setting method for Pr.08-31–08-33 is the same as that for Pr.08-01–08-03.
- The two sets of PID parameters switch automatically according to the frequency and deviation.

Switch according to the output frequency:

- When the output frequency is between Pr.01-07 and Pr.01-00, the PID parameter is the linear interpolation value between the two PID parameter groups.

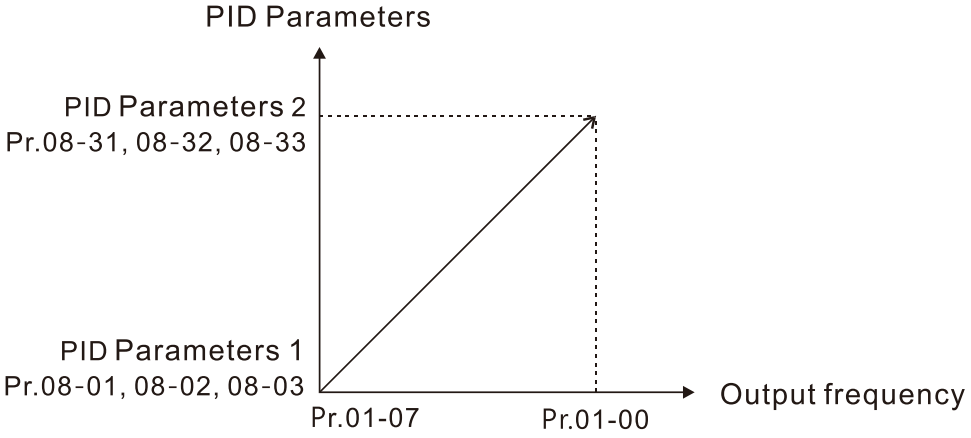

Switch according to the deviation:

- When the deviation absolute value between the set point and feedback is smaller than Pr.08-76 (PID2 Parameter Switch Deviation 1), the first group PID parameters are used.
- When the deviation absolute value between the set point and feedback is larger than Pr.08-77 (PID2 Parameter Switch Deviation 2), the second group PID parameters are used.

- When the deviation absolute value between the set point and feedback is between Pr.08-76 and Pr.08-77, the PID parameter is the linear interpolation value between the two PID parameter groups.

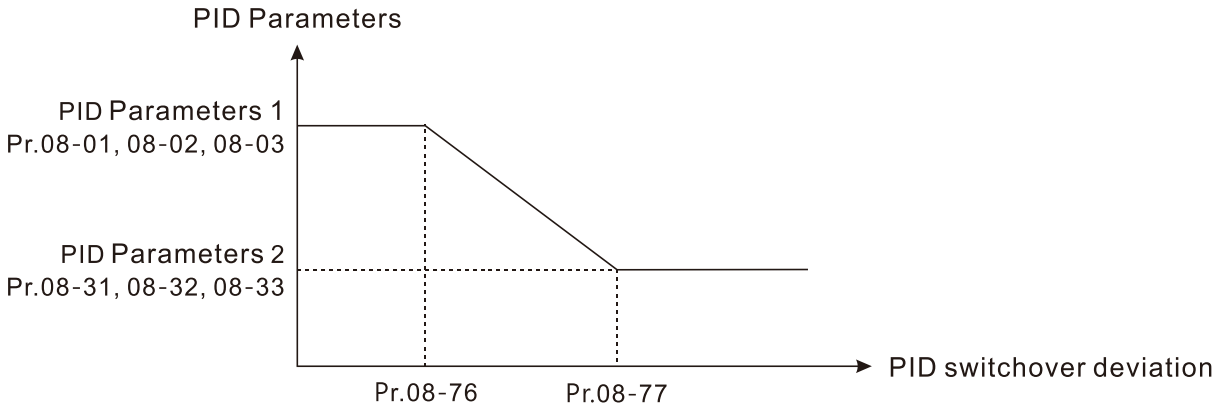

08-78 Allowed reverse running time after start-up

Default: 0.0

Settings 0.0–6553.5 sec.

- When Pr.08-78 is not set to 0, allowed reverse running time after start-up is enabled.
- When it set to 1 second, the PID control is not allowed to change the running direction within 0–1 seconds of starting time (Pr.08-21 = 0), and is allowed to change after 1 second of starting time (Pr.08-21 = 1).

09 Communication Parameters

When using communication devices, connect AC drive with PC by using Delta IFD6530 or IFD6500.

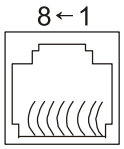

Modbus RS-485
Pin 1, 2, 6: Reserved
Pin 3, 7: GND2
Pin 4: SG-
Pin 5: SG+
Pin 8: D+10V

You can set this parameter during operation.

09-00 Communication Address

Default: 1

Settings 1–254

If RS-485 serial communication controls the AC motor drive, you must set the communication address for this drive in this parameter. Each AC motor drive's communication address must be different.

09-01 COM1 Transmission Speed

Default: 9.6

Settings 4.8–38.4 Kbps

Sets the transmission speed of the computer and the drive.

Options are 4.8 Kbps, 9.6 Kbps, 19.2 Kbps, or 38.4 Kbps; otherwise, the transmission speed is set to the default 9.6 Kbps.

09-02 COM1 Transmission Fault Treatment

Default: 3

Settings 0: Warn and continue operation
1: Fault and ramp to stop
2: Fault and coast to stop
3: No warning, no fault, and continue operation

Sets the response for Modbus communication errors in with the host. Set the detection time in Pr.09-03.

When a transmission error occurs (for example, the error code CE10 is displayed), the error remains even if the transmission status returns to normal, and does not clear automatically. In this case, set a reset command (Reset) to clear the error.

09-03 COM1 Time-out Detection

Default: 0.0

Settings 0.0–100.0 sec.

Sets the communication time-out.

09-04 COM1 Communication Protocol

Default: 1

Settings 1: 7, N, 2 (ASCII)
2: 7, E, 1 (ASCII)
3: 7, O, 1 (ASCII)

4: 7, E, 2 (ASCII)
5: 7, O, 2 (ASCII)
6: 8, N, 1 (ASCII)
7: 8, N, 2 (ASCII)
8: 8, E, 1 (ASCII)
9: 8, O, 1 (ASCII)
10: 8, E, 2 (ASCII)
11: 8, O, 2 (ASCII)
12: 8, N, 1 (RTU)
13: 8, N, 2 (RTU)
14: 8, E, 1 (RTU)
15: 8, O, 1 (RTU)
16: 8, E, 2 (RTU)
17: 8, O, 2 (RTU)

- Control by PC (Computer Link)
  When using the RS-485 serial communication interface, you must specify each drive's communication address in Pr.09-00. The computer then implements control using the drives' individual addresses.
- Modbus ASCII (American Standard Code for Information Interchange): Each byte of data is the combination of two ASCII characters. For example, one byte of data: 64 Hex, shown as '64' in ASCII, consists of '6' (36Hex) and '4' (34Hex).

1. Code Description

The communication protocol is in hexadecimal, ASCII: "0" … "9", "A" … "F", every hexadecimal value represents an ASCII code. The following table shows some examples.

Character	'0'	'1'	'2'	'3'	'4'	'5'	'6'	'7'
ASCII code	30H	31H	32H	33H	34H	35H	36H	37H

Character	'8'	'9'	'A'	'B'	'C'	'D'	'E'	'F'
ASCII code	38H	39H	41H	42H	43H	44H	45H	46H

2. Data Format

10-bit character frame (For ASCII):
(7, N, 2)

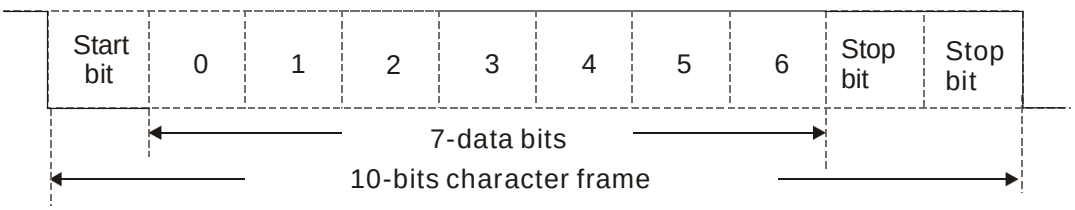

(7, E, 1)

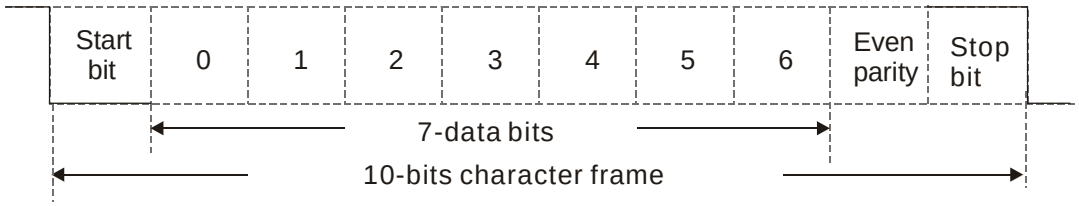

(7, O, 1)

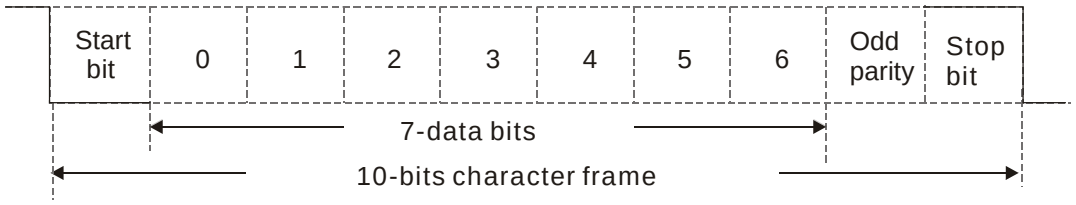

11-bit character frame (For RTU):

(8, N, 2)

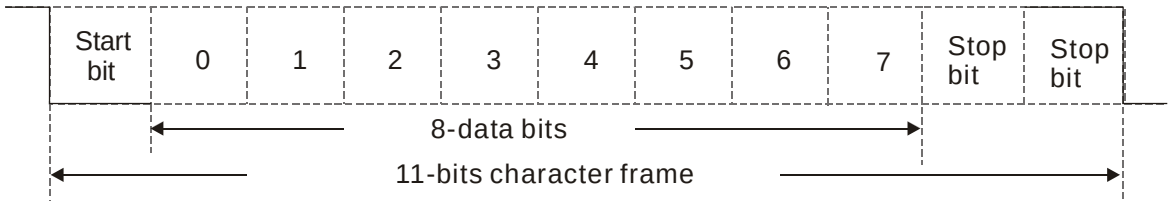

(8, E, 1)

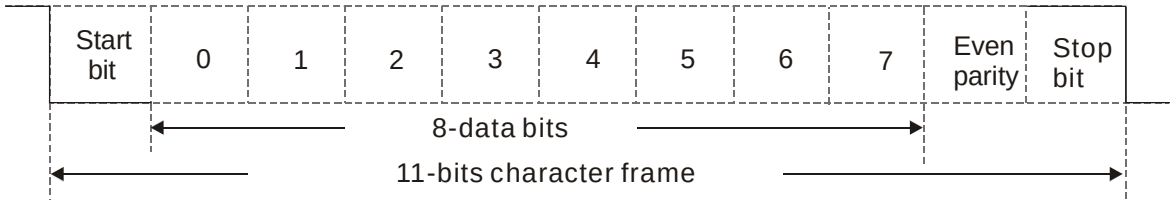

(8, O, 1)

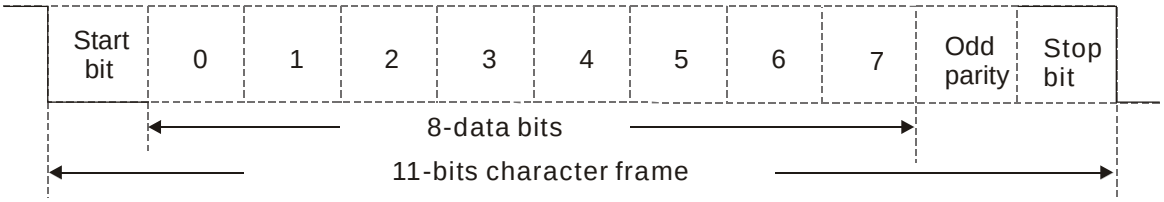

3. Communication Protocol

Communication Data Frame

ASCII mode:

STX	Start character = ' : ' (3AH)
Address Hi	Communication address: one 8-bit address consists of 2 ASCII codes
Address Lo	
Function Hi	Command code: one 8-bit command consists of 2 ASCII codes
Function Lo	
DATA (n-1)	Contents of data: N x 8-bit data consists of 2n ASCII codes N ≤ 16, maximum of 32 ASCII codes (20 sets of data)
…….	
DATA 0	
LRC CHK Hi	LRC checksum: one 8-bit checksum consists of 2 ASCII codes
LRC CHK Lo	
END Hi	End characters: END Hi = CR (0DH), END Lo = LF (0AH)
END Lo	

RTU mode:

START	Defined by a silent interval of more than 10 ms
Address	Communication address: 8-bit address
Function	Command code: 8-bit command
DATA (n-1)	Contents of data: N × 8-bit data, n ≤16
…….	
DATA 0	
CRC CHK Low	CRC checksum: one 16-bit checksum consists of 2 8-bit characters
CRC CHK High	
END	Defined by a silent interval of more than 10 ms

Communication Address (Address)

00H: broadcast to all AC motor drives

01H: AC motor drive of address 01

0FH: AC motor drive of address 15

10H: AC motor drive of address 16

:

FEH: AC motor drive of address 254

Function code (Function) and DATA (Data characters)

03H: read data from a register

06H: write to a single register

Example: Reading two continuous data from register address 2102H. AMD address is 01H.

ASCII mode:

Command Message		Response Message	
STX	':'	STX	':'
Address	'0'	Address	'0'
	'1'		'1'
Function	'0'	Function	'0'
	'3'		'3'
Starting register	'2'	Number of register (count by byte)	'0'
	'1'		'4'
	'0'	Content of starting register 2102H	'1'
	'2'		'7'
Number of register (count by word)	'0'		'7'
	'0'		'0'
	'0'	Content of register 2103H	'0'
	'2'		'0'
LRC Check	'D'		'0'
	'7'		'0'
END	CR	LRC Check	'7'
	LF		'1'
		END	CR
			LF

RTU mode:

Command Message		Response Message	
Address	01H	Address	01H
Function	03H	Function	03H
Starting data register	21H	Number of register (count by byte)	04H
	02H		
Number of register (count by world)	00H	Content of register address 2102H	17H
	02H		70H
CRC CHK Low	6FH	Content of register address 2103H	00H
CRC CHK High	F7H		00H
		CRC CHK Low	FEH
		CRC CHK High	5CH

06H: single write, write single data to a register.

Example: Writing data 6000 (1770H) to register 0100H. AMD address is 01H.

ASCII mode:

Command Message		Response Message	
STX	':'	STX	':'
Address	'0'	Address	'0'
	'1'		'1'
Function	'0'	Function	'0'
	'6'		'6'
Target register	'0'	Target register	'0'
	'1'		'1'
	'0'		'0'
	'0'		'0'
Register content	'1'	Register content	'1'
	'7'		'7'
	'7'		'7'
	'0'		'0'

LRC Check	‘7’	LRC Check	‘7’
	‘1’		‘1’
END	CR	END	CR
	LF		LF

RTU mode:

Command Message		Response Message	
Address	01H	Address	01H
Function	06H	Function	06H
Target register	01H	Target register	01H
	00H		00H
Register content	17H	Register content	17H
	70H		70H
CRC CHK Low	86H	CRC CHK Low	86H
CRC CHK High	22H	CRC CHK High	22H

10H: write multiple registers (write multiple data to registers). The system can write up to 20 sets of data simultaneously.

Example: Set the multi-step speed of an AC motor drive (address is 01H):

Pr.04-00 = 50.00 (1388H), Pr.04-01 = 40.00 (0FA0H)

ASCII Mode:

Command Message		Response Message	
STX	‘:’	STX	‘:’
ADR 1	‘0’	ADR 1	‘0’
ADR 0	‘1’	ADR 0	‘1’
CMD 1	‘1’	CMD 1	‘1’
CMD 0	‘0’	CMD 0	‘0’
Target register	‘0’	Target register	‘0’
	‘5’		‘5’
	‘0’		‘0’
	‘0’		‘0’
Number of register (count by word)	‘0’	Number of register (count by word)	‘0’
	‘0’		‘0’
	‘0’		‘0’
	‘2’		‘2’
Number of register (count by Byte)	‘0’	LRC Check	‘E’
	‘4’		‘8’
The first data content	‘1’	END	CR
	‘3’		LF
	‘8’		
	‘8’		
The second data content	‘0’		
	‘F’		
	‘A’		
	‘0’		
LRC Check	‘9’		
	‘A’		
END	CR		
	LF		

RTU mode:

Command Message	
ADR	01H
CMD	10H
Target register	05H
	00H
Number of register (count by word)	00H
	02H
Quantity of data (bytes)	04
The first data content	13H
	88H
The second data content	0FH
	A0H
CRC Check Low	'9'
CRC Check High	'A'

Response Message	
ADR	01H
CMD 1	10H
Target register	05H
	00H
Number of register (count by word)	00H
	02H
CRC Check Low	41H
CRC Check High	04H

Checksum

ASCII mode:

LRC (Longitudinal Redundancy Check) is calculated by summing up the values of the bytes from ADR1 to last data character then calculating the hexadecimal representation of the 2's-complement negation of the sum.

Example:

01H + 03H + 21H + 02H + 00H + 02H = 29H, the 2's-complement negation of 29H is **D7**H.

RTU mode:

CRC (Cyclical Redundancy Check) is calculated by the following steps:

Step 1. Load a 16-bit register (called CRC register) with FFFFH.

Step 2. Exclusive OR the first 8-bit byte of the command message with the low order byte of the 16-bit CRC register, putting the result in the CRC register.

Step 3. Examine the LSB of CRC register.

Step 4. If the LSB of CRC register is 0, shift the CRC register one bit to the right, fill MSB with zero, then repeat step 3. If the LSB of CRC register is 1, shift the CRC register one bit to the right, fill MSB with zero, Exclusive OR the CRC register with the polynomial value A001H, then repeat step 3.

Step 5. Repeat step 3 and 4 until you perform eight shifts. This processes a complete 8-bit byte.

Step 6. Repeat step 2 through 5 for the next 8-bit byte of the command message. Continue doing this until all bytes are processed. The final contents of the CRC register are the CRC value. When transmitting the CRC value in the message, the upper and lower bytes of the CRC value must be swapped, that is, the lower order byte is transmitted first.

The following is an example of CRC generation using C language. The function takes two arguments:

Unsigned char* data ← a pointer to the message buffer

Unsigned char length ← the quantity of bytes in the message buffer

The function returns the CRC value as a type of unsigned integer.

```
Unsigned int crc_chk(unsigned char* data, unsigned char length)
 {
        int j;
        unsigned int reg_crc=0Xffff;
        while(length--){
              reg_crc ^= *data++;
              for(j=0;j<8;j++){
                    if(reg_crc & 0x01){    /* LSB(b0)=1 */
                          reg_crc=(reg_crc>>1) ^ 0Xa001;
                    }else{
                          reg_crc=reg_crc >>1;
                    }
              }
        }
        return reg_crc;                        // return register CRC
  }
```

4. Address list

AC motor drive parameters

Modbus address	Function
GGnnH	GG is the parameter group, nn is the parameter number; for example, the address of Pr.04-10 is 040AH.

Control command (20xx)

Modbus address	R/W	Function	
2000H	RW	bit 1–0	00B: No function
			01B: Stop
			10B: Run
			11B: JOG + RUN
		bit 3–2	Reserved
		bit 5–4	00B: No function
			01B: FWD
			10B: REV
			11B: Change direction
		bit 7–6	00B: 1st acceleration / deceleration
			01B: 2nd acceleration / deceleration
			10B: 3rd acceleration / deceleration
			11B: 4th acceleration / deceleration
		bit 11–8	000B: Master speed
			0001B: 1st Step speed frequency
2000H	RW	bit 11–8	0010B: 2nd Step speed frequency

Modbus address	R/W	Function	
			0011B: 3rd Step speed frequency
			0100B: 4th Step speed frequency
			0101B: 5th Step speed frequency
			0110B: 6th Step speed frequency
			0111B: 7th Step speed frequency
			1000B: 8th Step speed frequency
			1001B: 9th Step speed frequency
			1010B: 10th Step speed frequency
			1011B: 11th Step speed frequency
			1100B: 12th Step speed frequency
			1101B: 13th Step speed frequency
			1110B: 14th Step speed frequency
			1111B: 15th Step speed frequency
		bit 12	1: Enable bit 06–11 function
		bit 14–13	00B: No function
			01B: Operated by digital keypad
			10B: Operated by Pr.00-21 setting
			11B: Change operation source
		bit 15	Reserved
2001H	RW	Frequency command (XXX.XX Hz)	
2002H	RW	bit 0	1: EF (external fault) on
		bit 1	1: Reset
		bit 2	1: B.B. ON
		bit 15–3	Reserved

Status monitor read only (21xx)

Modbus address	R/W	Function	
2100H	R	High byte: Warn code Low Byte: Error code	
2101H	R	bit 1–0	AC motor drive operation status 00B: Drive stops 01B: Drive decelerating 10B: Drive standby 11B: Drive operating
		bit 2	1: JOG command
		bit 4–3	Operation direction 00B: FWD run 01B: From REV run to FWD run 10B: REV run 11B: From FWD run to REV run
2101H	R	bit 8	1: Master frequency controlled by communication

Modbus address	R/W	Function	
			interface
		bit 9	1: Master frequency controlled by analog signal
		bit 10	1: Operation command controlled by communication interface
		bit 11	1: Parameter locked
		bit 12	1: Enable to copy parameters from keypad
		bit 15–13	Reserved
2102H	R	Frequency command (XXX.XX Hz)	
2103H	R	Output frequency (XXX.XX Hz)	
2104H	R	Output current (XX.XX A). When current is higher than 655.35, it shifts the decimal as (XXX.X A). The decimal can refer to High byte of 211F.	
2105H	R	DC bus voltage (XXX.X V)	
2106H	R	Output voltage (XXX.X V)	
2107H	R	Current step number of multi-step speed operation	
2108H	R	Reserved	
2109H	R	Counter value	
210AH	R	Power factor angle (XXX.X)	
210BH	R	Output torque (XXX.X %)	
210CH	R	Motor speed (XXXXX rpm)	
210DH	R	Reserved	
210EH	R	Reserved	
210FH	R	Prompt Power output (X.XXX kW)	
2116H	R	Multi-function display (Pr.00-04)	
211BH	R	Maximum Operation Frequency (Pr.01-00) or Maximum User-defined Value (Pr.00-26) When Pr.00-26 is 0, this value is equal to Pr.01-00 setting. When Pr.00-26 is not 0, and the command source is keypad, this value = Pr.00-24 * Pr.00-26 / Pr.01-00. When Pr.00-26 is not 0, and the command source is 485, this value = Pr.09-10 * Pr.00-26 / Pr.01-00.	
211FH	R	High byte: decimal of current value (display)	
2157H	R	Display the position of multi-point positioning	

Status monitor read only (22xx)

Modbus address	R/W	Function
2200H	R	Display output current (A). When current is higher than 655.35, it shifts the decimal as (XXX.X A). The decimal can refer to High byte of 211F.
2201H	R	Display counter value (c)

Modbus address	R/W	Function
2202H	R	Actual output frequency (XXXXX Hz)
2203H	R	DC bus voltage (XXX.X V)
2204H	R	Output voltage (XXX.X V)
2205H	R	Power angle (XXX.X)
2206H	R	Display actual motor speed kW of U, V, W (XXXXX kW)
2207H	R	Display motor speed in rpm estimated by the drive (XXXXX rpm)
2208H	R	Display positive / negative output torque in %, estimated by the drive (+0.0: positive torque, -0.0: negative torque) (XXX.X%)
2209H	R	Reserved
220AH	R	PID feedback value after enabling PID function (XXX.XX%)
220BH	R	Display signal of AVI analog input terminal, 0-10 V corresponds to 0.00–100.00% (see Explanation 1 in Pr.00-04)
220CH	R	Display signal of ACI analog input terminal, 4–20 mA / 0–10 V corresponds to 0.00–100.00% (see Explanation 2 in Pr.00-04)
220DH	R	Reserved
220EH	R	IGBT temperature of drive power module (XXX.X °C)
220FH	R	Reserved
2210H	R	The status of digital input (ON / OFF), refer to Pr.02-12 (see NOTE 3 in Pr.00-04)
2211H	R	The status of digital output (ON / OFF), refer to Pr.02-18 (see NOTE 4 in Pr.00-04)
2212H	R	The multi-step speed that is executing (S)
2213H	R	The corresponding CPU pin status of digital input (d.) (see NOTE 3 in Pr.00-04)
2214H	R	The corresponding CPU pin status of digital output (O.) (see NOTE 4 in Pr.00-04)
2215H	R	Reserved
2216H	R	Pulse input frequency (XXX.XX Hz)
2217H	R	Reserved
2218H	R	Reserved
2219H	R	Display times of counter overload (XXX.XX%)
221AH	R	GFF (XXX.XX%)
221BH	R	DC bus voltage ripples (XXX.X V)
221DH	R	Number of poles of a permanent magnet motor
221EH	R	User page displays the value in physical measure
221FH	R	Output value of Pr.00-05 (XXX.XX Hz)
2220H	R	Reserved

Modbus address	R/W	Function	
2221H	R	Reserved	
2222H	R	Reserved	
2223H	R	Control mode of the drive. 0: speed mode 1: torque mode	
2224H	R	Carrier frequency of the drive (XX kHz)	
2225H	R	Reserved	
2226H	R	Drive status	
		bit 1–0	00b: No direction 01b: Forward 10b: Reverse
		bit 3–2	01b: Drive ready 10b: Error
		bit 4	0b: Motor drive did not output 1b: Motor drive did output
		bit 5	0b: No alarm 1b: Alarm
2227H	R	Drive's estimated output torque (positive or negative direction) (XXXX Nt-m)	
2228H	R	Reserved	
2229H	R	Accumulate KWH display (XXXX.X)	
222AH	R	Reserved	
222BH	R	Reserved	
222CH	R	Reserved	
222DH	R	Reserved	
222EH	R	PID reference (XXX.XX%)	
222FH	R	PID offset (XXX.XX%)	
2230H	R	PID output frequency (XXX.XX Hz)	
2231H	R	Reserved	
2232H	R	Display auxiliary frequency	
2233H	R	Display master frequency	
2234H	R	Display frequency after addition and subtraction of auxiliary and master frequencies.	

5. Exception response

When the drive is using the communication connection, if an error occurs, the drive responds to the error code and sets the highest bit (bit 7) of code to 1 (function code AND 80H) then responds to the control system to signal that an error occurred.

If the keypad displays "CE-XX" as a warning message, "XX" is the error code at that time. Refer to the table of error codes for communication error for reference.

Example:

ASCII mode

STX	':'
Address	'0'
	'1'
Function	'8'
	'6'
Exception code	'0'
	'2'
LRC CHK	'7'
	'7'
END	CR
	LF

RTU mode:

Address	01H
Function	86H
Exception code	02H
CRC CHK Low	C3H
CRC CHK High	A1H

The explanation of error codes

Error code	Explanation
1	Function code is not supported or unrecognized.
2	Address is not supported or unrecognized.
3	Data is not correct or unrecognized.
4	Failure to execute this function code

09-09 Communication Response Delay Time

Default: 2.0

Settings 0.0–200.0 ms

Sets the response delay time after the AC motor drive receives a communication command as shown in the following.

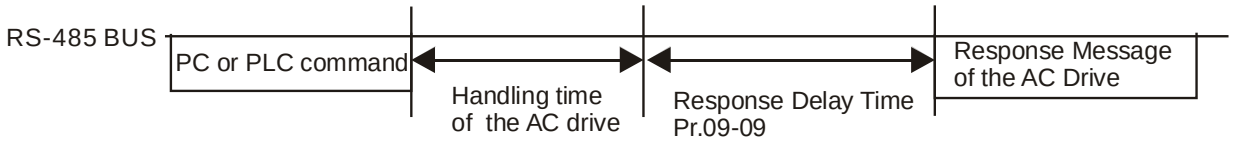

09-10 Communication Main Frequency

Default: 60.00

Settings 0.00–599.00 Hz

When you set Pr.00-20 to 1 (RS-485 serial communication), the AC motor drive saves the last Frequency command into Pr.09-10 when there is abnormal power off or momentary power loss. After the drive reboots when power is restored, it checks the frequency in Pr.09-10 if no new Frequency command is input. When a Frequency command of 485 changes (the Frequency command source must be set as Modbus), this parameter also changes.

09-11 Block Transfer 1

09-12 Block Transfer 2

09-13 Block Transfer 3

09-14 Block Transfer 4

09-15 Block Transfer 5

09-16 Block Transfer 6

09-17 Block Transfer 7

09-18 Block Transfer 8

09-19	Block Transfer 9
09-20	Block Transfer 10
09-21	Block Transfer 11
09-22	Block Transfer 12
09-23	Block Transfer 13
09-24	Block Transfer 14
09-25	Block Transfer 15
09-26	Block Transfer 16

Default: 0

Settings 0–65535

- There is a group of block transfer parameters available in the AC motor drive (Pr.09-11–Pr.09-26). Using communication code 03H, you can store the parameters (Pr.09-11–Pr.09-26) that you want to read.
- For example: according to the Address List (as shown in the table below), Pr.01-42 is shown as 012A. Set Pr.09-11 to 012Ah (the minimum voltage of Pr.01-42 M2 is 2.0 V), and use Pr.09-11 (communication address 090B) to read the communication parameter, the read value is 2.0.

AC motor drive parameters	GGnnH	GG is the parameter group, nn is the parameter number; for example, the address of Pr.04-10 is 040AH.

- Mind if the block transfer parameters are read only. If the data is written to read-only parameters from the upper unit, a communication error may occur.

09-30 Communication Decoding Method

Default: 1

Settings 0: Decoding method 1
1: Decoding method 2

- EtherCAT card only supports decoding method 2 (60xx).

Communication Decoding Method		Decoding Method 1	Decoding Method 2
Source of Operation Control	Digital Keypad	Digital keypad controls the drive action regardless of decoding method 1 or 2.	
	External Terminal	External terminal controls the drive action regardless of decoding method 1 or 2.	
	RS-485	Refer to address: 2000h–20FFh	Refer to address: 6000h–60FFh

09-31 Internal Communication Protocol

Default: 0

Settings 0: Modbus 485
-21: Pump Master
-22: Pump Slave 1
-23: Pump Slave 2
-24: Pump Slave 3

10 Speed Feedback Control Parameters

You can set this parameter during operation.

10-16 Pulse Input Type Setting

Default: 0

Settings
0: Disabled (default)
5: Single-phase pulse input
6: PWM signal input

- When Pr.00-20 = 4, the command source is MI5. Then, you can select external command as PWM mode through Pr.10-16.
- When you set Pr.10-16 = 0, the function for this parameter is disabled. When you set Pr.10-16 = 5, the pulse input type is single-phase pulse mode with a steady maximum input pulse frequency of 10 kHz and a corresponding relationship between 0–10 kHz pulse signal and 0–Fmax (Pr.01-00) frequency command. For example, if 10 ÷ 2 = 5 kHz pulse signal corresponds to Fmax ÷ 2 frequency command, and when the input pulse exceeds 10 kHz, the frequency command remains at Fmax (Pr.01-00).
- When you set Pr.10-16 = 0, the function for this parameter is disabled. When you set Pr.10-16 = 6, pulse input type is PWM mode. You can set how long the PWM outputs a command after how many times of averaging and set the period of external PWM both through Pr.07-43. The average value for frequency command and output speed depends on the settings for these two parameters. Refer to Pr.07-43 for detailed descriptions.

10-29 Upper Limit of Frequency Deviation

Default: 20.00

Settings 0.00–100.00 Hz

- Limits the maximum frequency deviation.
- If you set this parameter too high, an abnormal feedback malfunction occurs.

10-31 I/F Mode, Current Command

Default: 40

Settings 0–150% rated current of the motor

- Sets the current command for the drive in the low speed area. When the motor stalls on heavy duty start-up or forward/reverse with load, increase the parameter value. If the inrush current is too high and causes oc stall, then decrease the parameter value.

10-32 PM FOC Sensorless Speed Estimator Bandwidth

Default: 5.00

Settings 0.00–600.0 z

- Sets the speed estimator bandwidth. Adjust the parameter to change the stability and the accuracy of the motor speed. If there is low frequency vibration (the waveform is similar to sine wave) during the process, then increase the bandwidth. If there is high frequency vibration (the waveform shows extreme vibration and is like a spur), then decrease the bandwidth.

10-34 PM Sensorless Speed Estimator Low-pass Filter Gain

Default: 1.00

Settings 0.00–655.35

- Changes the response speed of the speed estimator.
- If there is low frequency vibration (the waveform is similar to a sine wave) during the process, then increase the gain. If there is high frequency vibration (the waveform shows extreme vibration and is like a spur), then decrease the gain.

10-42 Initial Angle Detection Pulse Value

Default: 1.0

Settings 0.0–3.0

- The angle detection is fixed to 3: Use the pulse injection method to start.
  The parameter influences the value of the pulse during the angle detection. The larger the pulse, the higher the accuracy of rotor's position. A larger pulse might cause oc.
- Increase the parameter when the running direction and the command are opposite during start-up. If oc occurs at start-up, then decrease the parameter.
- Refer to **Section 12-2 Adjustment & Application** for detailed motor adjustment procedure.

10-49 Zero Voltage Time During Start-up

Default: 00.000

Settings 00.000–60.000 sec.

- This parameter is valid only when the setting of Pr.07-12 (Speed Tracking during Start-up) = 0.
- When the motor is in static state at start-up, this increases the accuracy when estimating angles. In order to put the motor in static state, set the three-phase drive output to 0 V to the motor. The Pr.10-49 setting time is the length of time for three-phase output at 0 V.
- It is possible that even when you apply this parameter, the motor cannot go in to the static state because of inertia or some external force. If the motor does not go into the static state in 0.2 seconds, increase this setting value appropriately.
- If Pr.10-49 is too high, the start-up time is longer. If it is too low, then the braking performance is weak.

10-51 Injection Frequency

Default: 500

Settings 0–1200 Hz

- This parameter is a high frequency injection command in PM SVC control mode, and usually you do not need to adjust it. But if a motor's rated frequency (for example, 400 Hz) is too close to the frequency setting for this parameter (that is, the Default of 500 Hz), it affects the accuracy of the angle detection. Refer to the setting for Pr.01-01 before you adjust this parameter.
- If the setting value for Pr.00-17 is lower than Pr.10-51*10, then increase the frequency of the carrier wave.
- Pr.10-51 is valid only when Pr.10-53 = 2.

10-52 Injection Magnitude

Default: 15.0 / 30.0

Settings 115V / 230V series: 100.0 V
460V series: 200.0 V
Note: The setting range varies depending on the voltage.

- The parameter is the magnitude command for the high frequency injection signal in PM SVC control mode.
- Increasing the parameter can increase the accuracy of the angle estimation, but the electromagnetic noise might be louder if the setting value is too high.
- The system uses this parameter when the motor's parameter is "Auto". This parameter influences the angle estimation accuracy.
- When the ratio of the salient pole (Lq/Ld) is lower, increase Pr.10-52 to make the angle detection more accurate.
- Pr.10-52 is valid only when Pr.10-53 = 2.

10-53 Angle detection method

Default: 0

Settings 0: Disabled
1: Force attracting the rotor to zero degrees
2: High frequency injection
3: Pulse injection

- Set to 2 for IPM; set to 3 for SPM. If these settings cause problems, then set the parameter to 1.

[This page intentionally left blank]

11 Advanced Parameters

You can set this parameter during operation.

11-00 System Control

Default: 0

bit 3: Dead time compensation closed

bit 7: Save or do not save the frequency

11-41 PWM Mode Selection

Default: 2

Settings 0: Two-phase modulation mode

2: Space vector modulation mode

- Two-phase mode: effectively reduces the drive power components losses and provides better performance in long wire applications.
- Space vector mode: effectively reduces the power loss and electromagnetic noise of the motor.

11-42 PWM Mode Selection

Default: 0000

Settings 0000–FFFFh

bit No.	Function	Description
0	Reserved	
1	FWD / REV action control	0: FWD / REV cannot be controlled by Pr.02-12 bit 0 & 1. 1: FWD / REV can be controlled by Pr.02-12 bit 0 & 1.
2–15	Reserved	

[This page intentionally left blank]

12 Function Parameters

In this parameter group, ASR stands for Adjust Speed Regulator.

You can set this parameter during operation.

12-00 Set Point Deviation Level

Default: 0

Settings 0–100%

12-01 Detection Time of Set Point Deviation Level

Default: 10

Settings 1–9999 sec.

When the deviation is less than Pr.12-00 (in the range of PID set point to Pr.12.00 x PID set point) for a time exceeding the setting of Pr.12-01, the AC motor drive decelerates to stop to be constant pressure status (this deceleration time is the setting for Pr.01-15). The system is ready when the deviation is within the range of PID set point to Pr.12-00 x PID set point during deceleration.

Example:

If the set point of constant pressure control of a pump is 4 kg, Pr.12-00 is set to 5%, and Pr.12-01 is set to 15 seconds, then the deviation is 0.2 kg (4 kg × 5%=0.2 kg). It means when the feedback value is higher than 3.8 kg for a time exceeding 15 seconds, the AC motor drive decelerates to stop (this deceleration time acts according to Pr.01-12). When the feedback value is less than 3.8 kg, the AC motor drive starts to run.

12-02 Offset Level of Liquid Leakage

Default: 0

Settings 0–50%

In the constant pressure status, when the liquid leakage is higher than Pr.12-02 x PID set point, the AC motor drive starts to run.

It is used to prevent the drive from frequent run/stop operation due to liquid leakage.

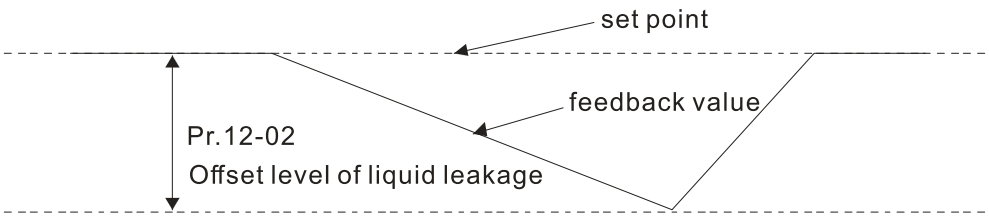

12-03 Liquid Leakage Change Detection

Default: 0

Settings 0: Disable

0–100%

12-04 Time Setting for Liquid Leakage Change

Default: 0.5

Settings 0: Disable

0.1–10.0 sec.

When the change of feedback value is less than the settings for Pr.12-03 and Pr.12-04, the liquid leakage occurs. When the system is in constant pressure status, the AC motor drive starts to run if the feedback value is higher than these two settings.

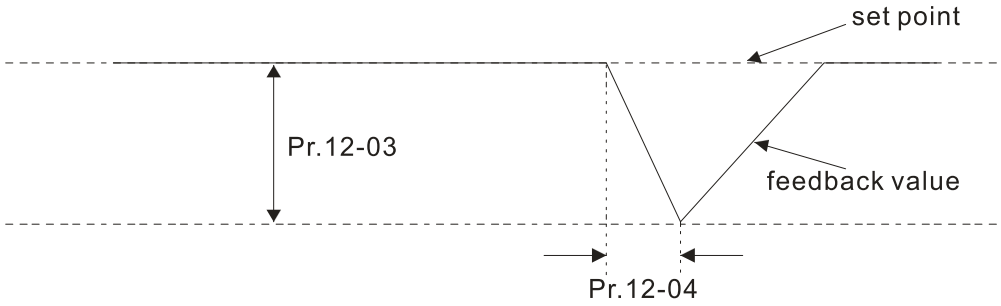

Example:

If the set point of constant pressure control of a pump is 4 kg, Pr.12-00 is set to 5%, Pr.12-01 is set to 15 seconds, Pr.12-02 is set to 25%, Pr.12-03 is set to 3% and Pr.12-04 is set to 0.5 seconds, then the offset is 0.2 kg (4 kgX5%=0.2 kg). It means when the feedback value is higher than 3.8 kg for a time exceeding 15 seconds, the AC motor drive decelerates to stop (this deceleration time acts according to Pr.01-15). When the feedback value is less than 3.8 kg, the AC motor drive starts to run.

Status 1:

If the AC motor drive is in the constant pressure status and the feedback change value is less than 0.12 kg within 0.5 seconds. The AC motor drive does not run until the feedback value decreases by this proportion to the value less than 3 kg.

Status 2:

When the AC motor drive is in constant pressure, it does not run until the feedback change value is less than 3.88 kg for a time exceeding 0.5 seconds.

12-05 Multi-Pump Control Mode

Default: 0

Settings 0–2

0: Disable
1: Fixed time circulation (alternative operation)
2: Fixed quantity control (multi-pump operating at constant pressure)

When using multi-pump control mode, the setting for Pr.12-05 of each pump must be the same.

12-07 Multi-pump's Fixed Time Circulation Period

Default: 60

Settings 1–65535 (minute)

Fixed time circulation mode (alternative operation). For example, when pump 01's operating time is longer than the setting at Pr.12-07, pump #1 is stopped then pump #2 is activated, so on and so forth.

- Fixed quantity control (multi-pump runs at constant pressure). For example, when master pump's operating time is longer than the setting at Pr.12-07, master pump switches to the slave pump.
- This parameter only applies for the master pump.

12-08 Frequency to Start Switching Pumps

Default: 60.00

Settings 0.00 Hz–FMAX (Pr.01-00)

12-09 Time Detected when Pump Reaches the Starting Frequency

Default: 1.0

Settings 0.0–3600.0 sec.

12-10 Frequency to Stop Switching Pumps

Default: 48.00

Settings 0.00 Hz–FMAX (Pr.01-00)

12-11 Time Detected when Pump Reaches the Stopping Frequency

Default: 1.0

Settings 0.0–3600.0 sec.

- This parameter only applies for the master pump.
- This parameter only works under fixed quantity control (multi-pump operating at constant pressure)
- When the master pump's operating frequency ≥ Pr.12-08 and the time elapsed exceeds Pr.12-09, a slave pump #1 will be activated. If the quantity of water is still insufficient, slave pump #2 and #3 will be activated under the same conditions.
- If the master pump's operating frequency ≤ Pr.12-10 and the time elapsed exceeds Pr.12-11, slave pump #1 stops. If the master pump still satisfies those conditions, then the slave pump #2 and #3 stop consecutively, the master pump remains in operation.
- The run or stop of the master pump depends on the automation stop function.

12-12 Pump's Frequency at Time-out (Disconnection)

Default: 0.00

Settings 0.00–FMAX (Pr.01-00)

- This parameter only applies for slave pumps.
- Refer to Pr.09.02 COM1 transmission fault treatment and Pr.09.03 COM1 time-out detection for the conditions to disconnect communication and treatment.
- If there is a time-out occurred under fixed quantity control (multi-pump operating at constant pressure) and a slave pump's time-out frequency = Pr.12-12, that slave pump is in stand-alone mode after stop command is given.
- The master pump has the function to redetect if a slave pump is time-out.

12-13 Pump's Error Treatment

Default: 1

Settings bit 0: whether to switch to an alternative pump when operation pump error occurred.
0: Stop all pump actions.
1: Switch to an alternative pump.
bit 1: Standby or stop after resetting from error.
0: Standby after reset.
1: Stop after reset.
bit 2: To run a pump or not when an error is occurred.
0: Do not start.
1: Select an alternative pump.

- This parameter only applies for the master pump.
- bit 0: If any error occurred during an operation, should the master pump switch to an alternative pump?
  0: Stop all the pump actions
  1: Switch to an alternative pump
  For example:
  When bit 0 = 0, if any error occurred during an operation, all the pumps stop.
  When bit 0 = 1, if there is any error during an operation, the erroneous pump switches to an alternative pump.
- bit 1: Stop or put the erroneous pump in standby mode after reset it?
  0: Reset the erroneous pump and put it in standby mode (this pump can receive RUN command).
  1: Reset the erroneous pump and stop it (this pump cannot receive RUN command).
  For example:
  When bit1 = 0, once the erroneous pump is reset, this pump can be in control again to keep running. When bit1 = 1, once the erroneous pump is reset, this pump cannot be in control to run again. Only after the master pump gives a RUN command, then that slave pump is able to run again.
- bit 2: Can the master pump accept a RUN command when there is an erroneous pump?
  0: When there is an erroneous pump, the master pump rejects the RUN command.
  1: When there is an erroneous pump, the master pump chooses an alternative pump to run.
  For example:
  When bit2 = 0, the master pump rejects the RUN command, while drive #2 has an error.
  When bi2 = 1, the master pump accepts the RUN command and choose an alternative pump to run, while drive #2 has an error.
- This parameter only works under auto mode.

12-14 Selection of Pump Start-up Sequence

Default: 1

Settings 0: By pump's ID #
1: By the running time.

- 0: By pump ID#, (1 → 2 → 3 → 4 → 1)
- 1: By the shortest running time

12-15 Running Time of Multi-pump under Alternative Operation

Default: 60.0

Settings 0.0–360.0 sec.

- This parameter only applies for the master pump.
- The assigned value (setting value) of time to switch between master pump and slave pump.

12-20 Simple Positioning Stop Frequency 0

Default: 0.00

Settings 0.00–599.00 Hz

12-21 Simple Positioning Stop Frequency 1

Default: 5.00

Settings 0.00–599.00 Hz

12-22 Simple Positioning Stop Frequency 2

Default: 10.00

Settings 0.00–599.00 Hz

12-23 Simple Positioning Stop Frequency 3

Default: 20.00

Settings 0.00–599.00 Hz

12-24 Simple Positioning Stop Frequency 4

Default: 30.00

Settings 0.00–599.00 Hz

12-25 Simple Positioning Stop Frequency 5

Default: 40.00

Settings 0.00–599.00 Hz

12-26 Simple Positioning Stop Frequency 6

Default: 50.00

Settings 0.00–599.00 Hz

12-27 Simple Positioning Stop Frequency 7

Default: 60.00

Settings 0.00–599.00 Hz

- The settings for Pr.12-20–Pr.12-27 must meet the following condition:
  Pr.12-20 ≤ Pr.12-21 ≤ Pr.12-22 ≤ Pr.12-23 ≤ Pr.12-24 ≤ Pr.12-25 ≤ Pr.12-26 ≤ Pr.12-27.
- If any two of the parameters (between Pr.012-20–Pr.12-27) have the same stop frequency, their Delay Time of Simple Positioning Stop must be the same as well.

12-28	Delay Time of Simple Positioning Stop 0
12-29	Delay Time of Simple Positioning Stop 1
12-30	Delay Time of Simple Positioning Stop 2
12-31	Delay Time of Simple Positioning Stop 3
12-32	Delay Time of Simple Positioning Stop 4
12-33	Delay Time of Simple Positioning Stop 5
12-34	Delay Time of Simple Positioning Stop 6
12-35	Delay Time of Simple Positioning Stop 7

Default: 0.00

Settings 0.00–600.00 sec.

- Valid only when Pr.00-22 is set to 2: motor stops by simple positioning.
- The settings for Pr.12-20–Pr.12-27 must correspond to the settings for Pr.12-28–Pr.12-35.

Corresponding parameters :

(Pr.12-20, Pr.12-28)	(Pr.12-21, Pr.12-29)	(Pr.12-22, Pr.12-30)	(Pr.12-23, Pr.12-31)
(Pr.12-24, Pr.12-32)	(Pr.12-25, Pr.12-33)	(Pr.12-26, Pr.12-34)	(Pr.12-27, Pr.12-35)

- The function of Pr.12-28–Pr.12-35 is simple positioning. Speed starts to decelerate after the time set at Pr.12-28–Pr.12-35 elapse. The accuracy of positioning is self-assessed by user.

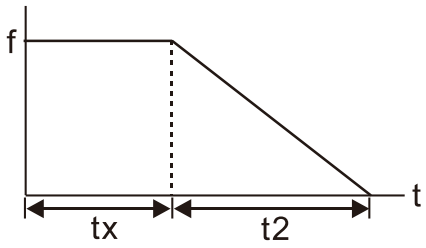

$$S = n \times \left(\frac{t_x + (t_x + t_2)}{2} \right) \qquad n = f \times \frac{120}{p}$$

$$S = n \times \left(\frac{t_x + (t_x + t_2)}{2} \right) \qquad n = f \times \frac{120}{p}$$

s: distance travelled (revolution)
n: rotation speed (revolution/second)
t_x: delay time (second)
t_2: deceleration time (second)

n: rotation speed (rmp) (revolution/ minute)
p: number of poles of motors
f: rotation frequency (Hz)

The value of t_x in the equation above is as shown below:

1.1 When the slope is negative (t1 > t2)

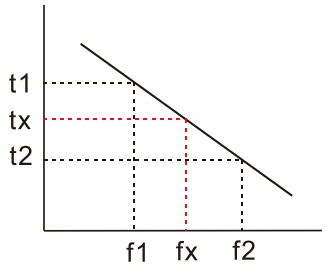

$$t_x = t_1 + \left(\frac{f_x - f_1}{f_2 - f_1} \right) \times (t_2 - t_1) = t_1 + \left(\frac{f_x - f_1}{10} \right) \times (t_2 - t_1)$$

1.2 When the sloe is positive (t1 < t2)

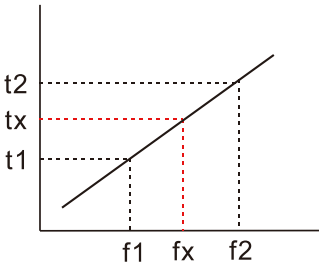

$$t_x = t_2 - \left(\frac{f_2 - f_x}{f_2 - f_1} \right) \times (t_2 - t_1) = t_2 - \left(\frac{f_2 - f_x}{10} \right) \times (t_2 - t_1)$$

As shown in the image below, a four-pole motor turntable's diameter = r and its rotation speed = n (RPM).

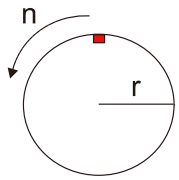

Example 01:

When the motor turntable is rotating at 50 Hz, Pr.00-22 =2 (motor stops by simple positioning), Pr.12-26=50 Hz (Simple Positioning Stop Frequency 6), and its corresponding Pr.12-34 =2 seconds (Delay Time of Simple Positioning Stop 6) , the deceleration time is 10 seconds for decreasing from 50 Hz to 0 Hz.

When STOP command is given, Simple Positioning Stop is activated, its rotation speed is n = 120 x 50 / 4 (revolution / minute) = 25 (revolution / second).

Number of revolutions of motor turntable = (25 x (2 + 12)) / 2 = 175 (revolutions)

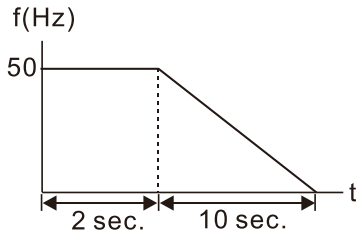

Therefore, the distance travelled by the motor after the STOP command is given = number of revolutions x circumference = 175x 2 π r. It means the turntable returns to the top after 175 revolutions.

Example 02:

If the turntable rotates at 1.5 Hz, Pr.12-22 = 10 Hz (Simple Positioning Stop Frequency 2), Pr.12-21 = 0 Hz, and Pr.12-30 =10 seconds (Delay Time of Simple Positioning Stop 2), then the deceleration time is 40 seconds for decreasing from 60 Hz to 0 Hz.

The delay time to stop of 1.5 Hz is 1.5 seconds, the deceleration time is 1 second for decreasing from 1.5 Hz to 0 Hz.

When STOP command is given, Simple Positioning Stop is activated, its rotation speed is n = 120 x 1.5 / 4 (revolution / minute) = 1.5 / 2 (revolution / second).

Number of revolutions of motor turntable = (1.5/2 x (1.5 + 2.5)) / 2 = 1.5 (revolutions)

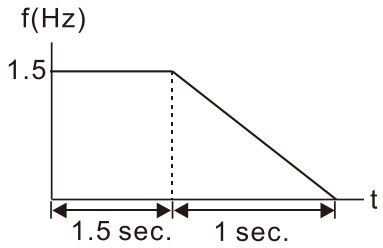

Therefore, the distance travelled by the motor after the STOP command is given = number of revolutions x circumference = 1.5x 2 π r. It means the turntable stopped after 1.5 revolutions.

12-40 Automatic Operation Mode

Default: 0

Settings 0: Disable operation
1: Execute one program cycle
2: Continuously execute program cycles
3: Execute one program cycle step by step
4: Continuously execute one program cycle step by step
5: Disable automatic operation, but the direction setting at multi-step speed 1 to 7 are effective

This parameter selects the mode of PLC operation for the AC motor drive. The PLC program can be applied for any external controls, relays or switches. The AC motor drive changes speeds and directions according to your desired programming.

When this parameter is set to 5 and it is running by external multi-speed, the highest priority of the operation direction is Pr.12-41.

Example 1 (Pr.12-40 = 1)

Execute one cycle of the PLC program. Related parameter settings are:

- Pr.04-00–04-06: 1st to 7th step speed (sets the frequency of each step speed).
- Pr.02-01–02-05: Multi-Function Input Terminals (set one multi-function terminal as 94-Programmable AUTO RUN).
- Pr.02-13–02-16: Multi-Function Output Terminals (set a Multi-Function Terminal as 77-program running indication, 78-Program Step Completed Indication or 79-Program Running Completed Indication).
- Pr.12-40: PLC mode.
- Pr.12-41: Direction of operation for Master Frequency and1st to 7th step speed.
- Pr.12-42–12-49: Operation time setting of Master Frequency and 1st to 7th step speed.

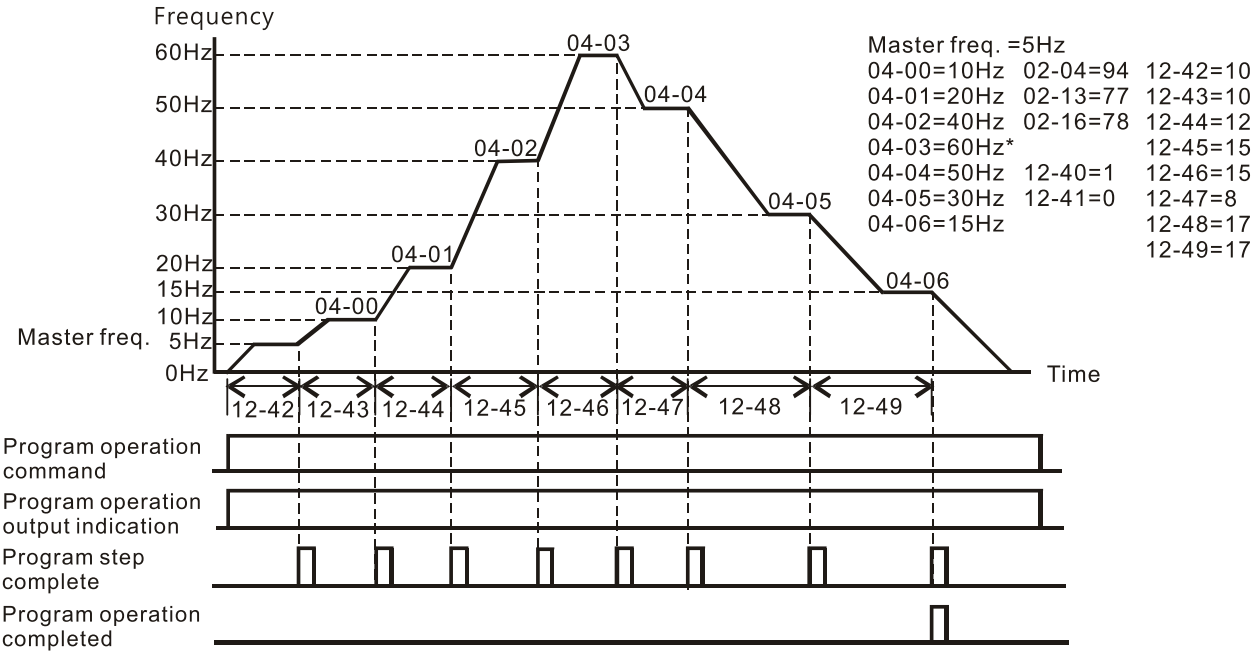

The diagram above shows one complete PLC cycle. To restart the cycle, turn the PLC program off and then turn back on.

Example 2 (Pr.12-40 = 2)

Continuously executes program cycles

The diagram below shows the PLC program stepping through each speed and then automatically starting again. To stop the PLC program, you must either pause the program or turn it off.

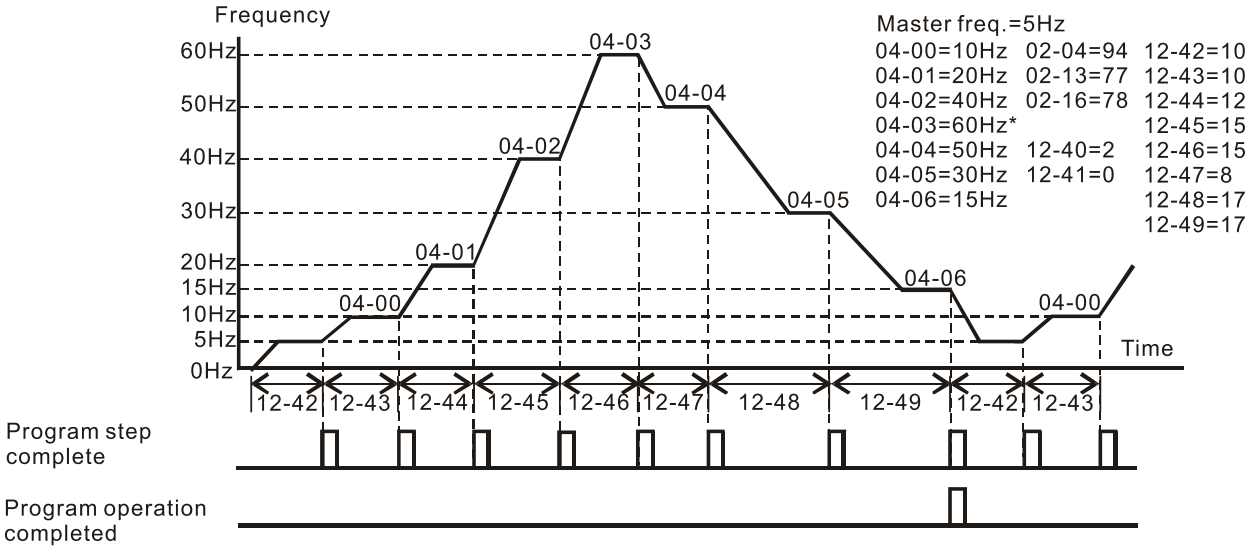

Example 3 (Pr.12-40 = 3)

Execute one program cycle step by step

The example shows how the PLC executes one program cycle at a time within a complete cycle. Each step uses the acceleration/deceleration time.

Noted that the time each step spends at its desired frequency reduces due to the time spent during acceleration/deceleration.

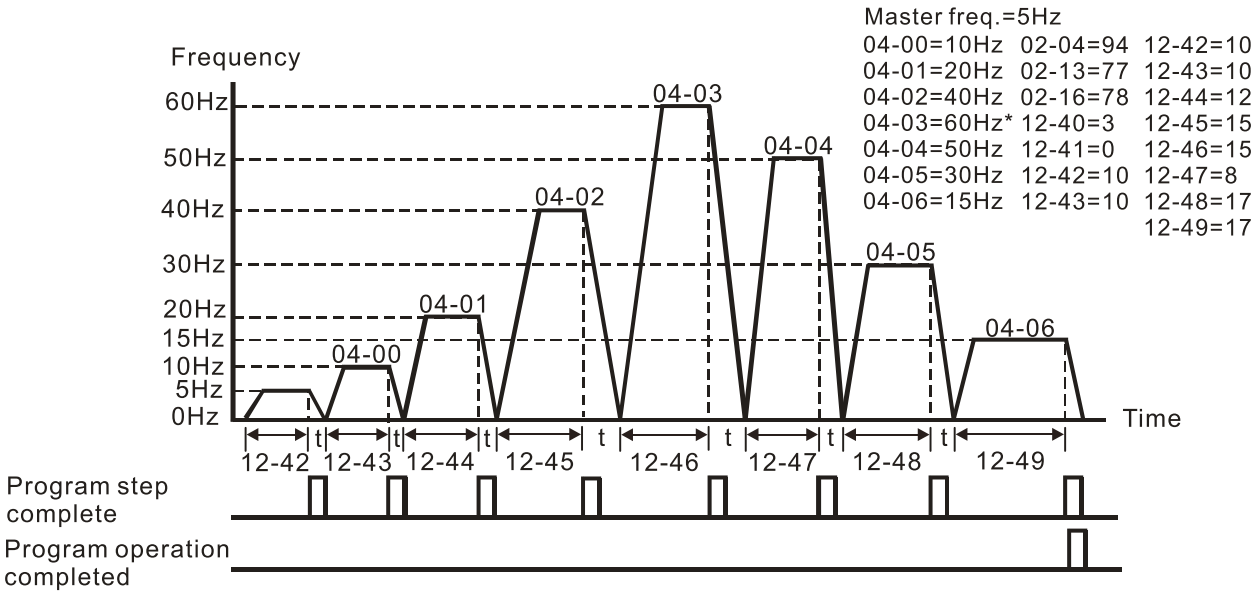

Example 4 (Pr.12-40 = 4)

Continuously execute PLC cycles step by step

In this example, PLC program runs continuously step by step. The diagram shown below is the example of steps in reverse direction.

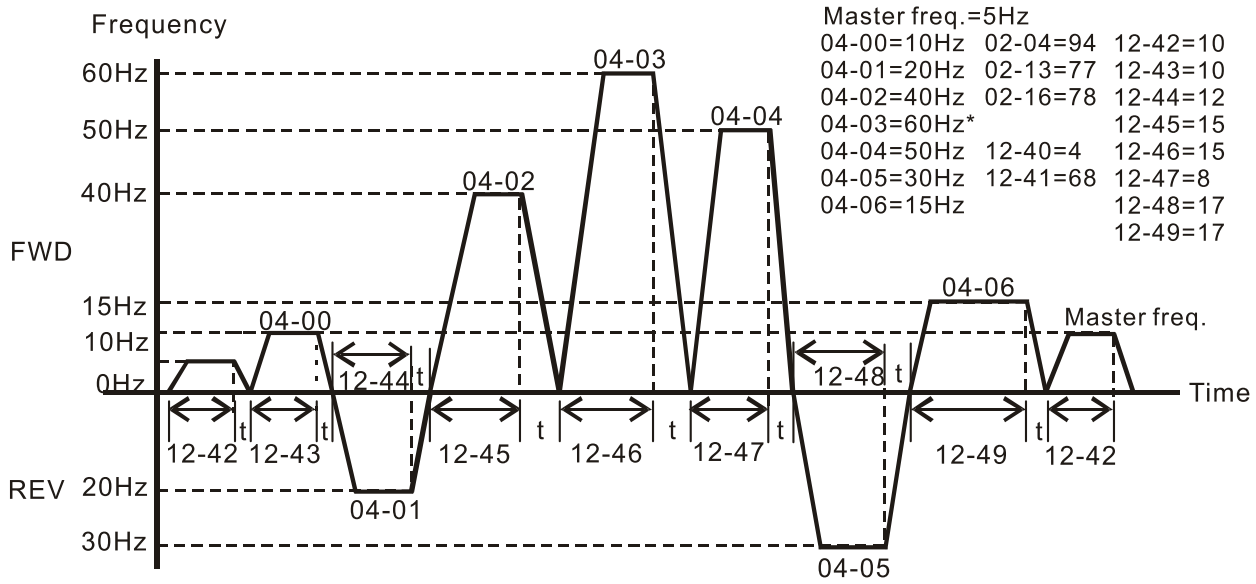

Example 5 (Pr.12-40=1)

Execute one cycle of the PLC program

In this example, the PLC program runs continuously. Noted that the times of reserve motion may be shorter than expected due to the acceleration/deceleration time.

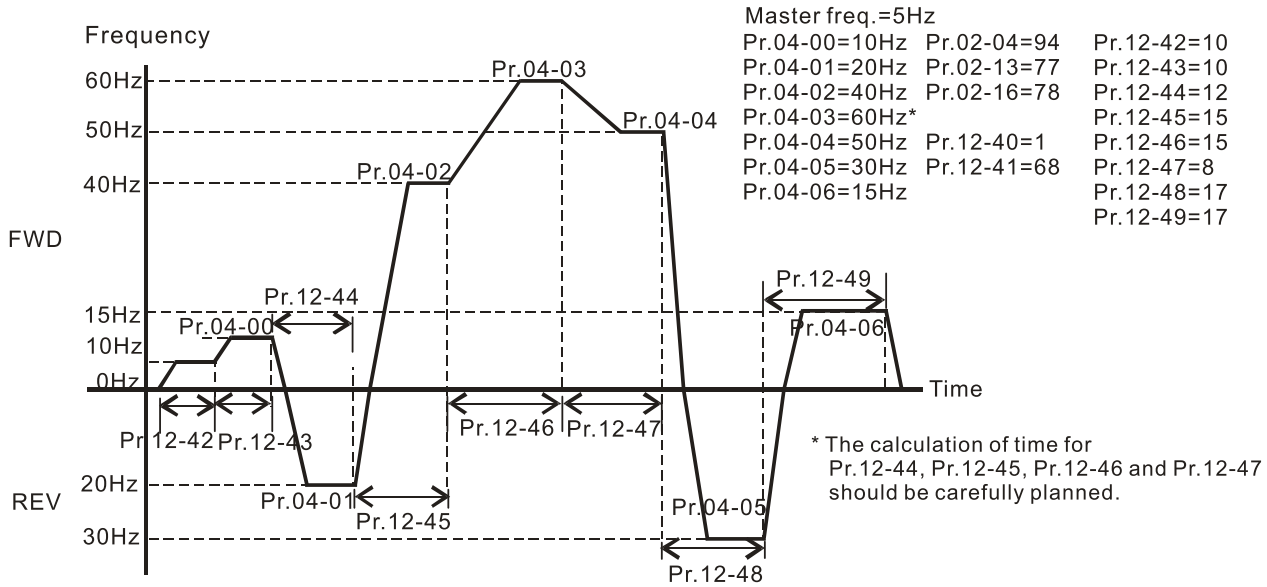

12-41 PLC Program Running Direction Mode

Default: 0

Settings bit 0–bit 7 (0: FWD RUN, 1: REV RUN)
bit 0: Direction of auto-operation's main speed
bit 1: Direction of the first speed for Pr.04-00
bit 2: Direction of the second speed for Pr.04-01
bit 3: Direction of the second speed for Pr.04-02
bit 4: Direction of the second speed for Pr.04-03
bit 5: Direction of the second speed for Pr.04-04
bit 6: Direction of the second speed for Pr.04-05
bit 7: Direction of the second speed for Pr.04-06

- This parameter controls the direction of motion for the Multi-Step Speed Pr.04-00 to Pr.04-06 and the Master Frequency. The original direction of Master Frequency will become invalid.
- The equivalent 8-bit number is used to program the forward/reverse motion for each of the 8 speed steps (including Master Frequency). The binary 8-bit number must convert to decimal, and then you can enter this parameter.

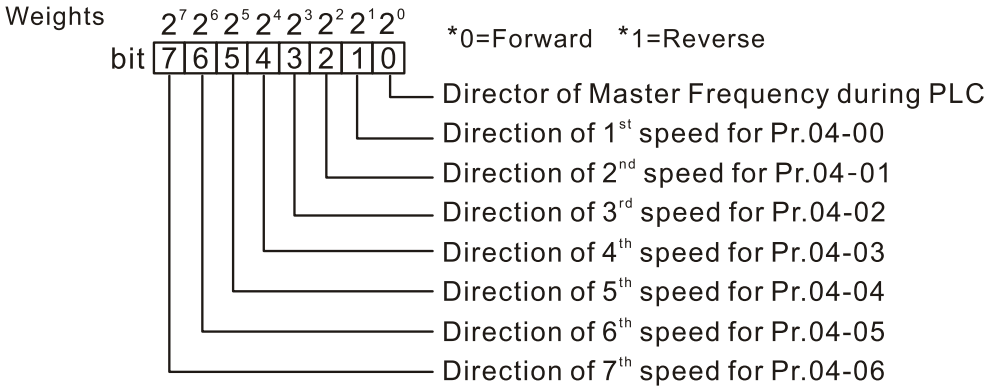

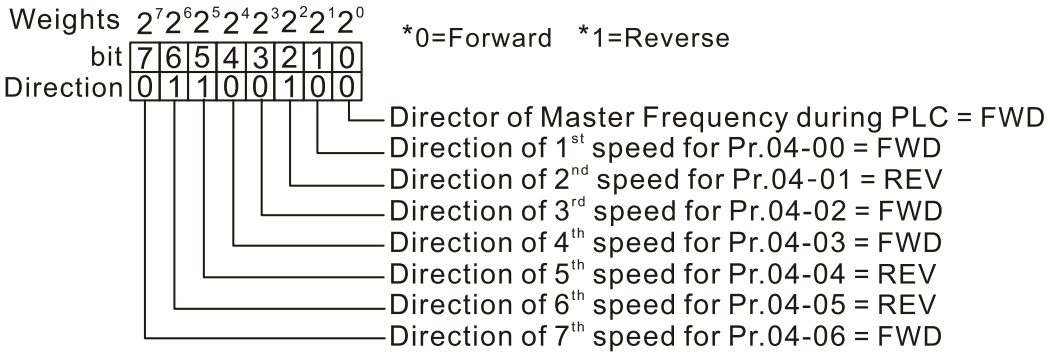

The setting value

$= bit7x2^7 + bit6x2^6 + bit5x2^5 + bit4x2^4 + bit3x2^3 + bit2x2^2 + bit1x2^1 + bit0x2^0$

$= 0x2^7 + 1x2^6 + 1x2^5 + 0x2^4 + 0x2^3 + 1x2^2 + 0x2^1 + 0x2^0$

$= 0 + 64 + 32 + 16 + 0 + 0 + 2 + 0$

$= 100$ Setting Pr.12-41 = 100

$2^0=1$	$2^3=8$	$2^6=64$
$2^1=2$	$2^4=16$	$2^7=128$
$2^2=4$	$2^5=32$	

12-42	Main Frequency Time Setting
12-43	1st Speed Time Setting
12-44	2nd Speed Time Setting
12-45	3rd Speed Time Setting
12-46	4th Speed Time Setting
12-47	5th Speed Time Setting
12-48	6th Speed Time Setting
12-49	7th Speed Time Setting

Default: 0

Settings 0–65500 sec.

- Pr.12-42 to Pr.12-49 correspond to the operation time for each multi-step speed defined. The maximum value for these parameters is 65500 sec., and it displays as 65.5.
- If it is set to 0 (0 sec.), the corresponding step skips. This is commonly used to reduce number of program steps.

12-51 Average PWM Signal

Default: 1

Settings 1–100 times

- This parameter calculates the corresponding frequency command based on the average values according to the set number of times for PWM signal period. The smaller the number of times set, the faster the frequency changes.

12-52 PWM Signal Period

Default: 1

Settings 1–2000 ms

- Sets the period for PWM signal input.
- ME300 can control the operation frequency of the drive through PWM/pulse signal outputted from devices such as PLC; however, PWM signal can only be input from MI5. You must set the Master frequency command (AUTO) source Pr.00-20 to 4 (Pulse input without direction command) and set pulse input type Pr.10-16 to 6 (PWM signal input). Pr.07-43 sets how long the PWM outputs a command after how many times of averaging and sets the period of external PWM. The corresponding output frequency calculates according to the settings for these two parameters.
- When the actual input PWM pulse signal period is different from Pr.07-44 setting, the output frequency calculates incorrectly.
- The relationship between PWM signal and frequency command shows as the diagram below:

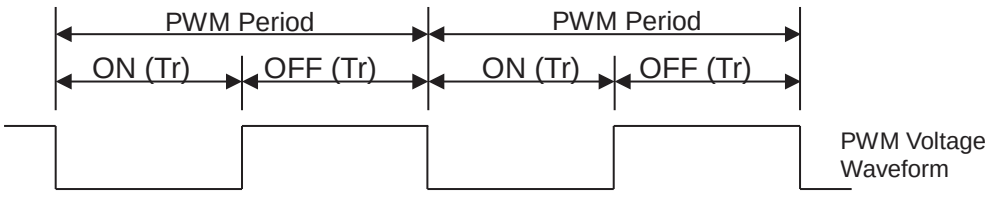

Frequency command value (Hz) = (ON time / PWM period) × the maximum output frequency (Hz)

13 Industry Application Parameters

13-00 Application Selection

Default: 00

Settings
00: Disabled
01: User-Defined parameter
03: Fan
04: Pump
05: Conveyor
07: Packing
10: Logistics
11: Tension PID
12: Tension PID + master / auxiliary frequency

📖 Note: after you select the macro, some of the default values adjust automatically according to the application selection.

📖 Group setting 03: Fan

The following table lists the relevant fan setting application parameters.

Pr.	Explanation	Settings
00-11	Speed control mode	0 (IM V/F)
00-16	Load selection	0 (Normal load)
00-17	Carrier frequency	Default setting
00-20	Master frequency command source (AUTO, REMOTE)	2 (External analog input)
00-21	Operation command source (AUTO, REMOTE)	1 (External terminals)
00-22	Stop method	1 (Coast to stop)
00-23	Motor direction control	1 (Disable reverse)
00-30	Master frequency command source (HAND, LOCAL)	0 (Digital keypad)
00-31	Operation command source (HAND, LOCAL)	0 (Digital keypad)
01-00	Motor 1 maximum operation frequency	Default setting
01-01	Motor 1 output frequency	Default setting
01-02	Motor 1 output voltage	Default setting
01-03	Motor 1 mid-point frequency 1	Default setting
01-04	Motor 1 mid-point voltage 1	Default setting
01-05	Motor 1 mid-point frequency 2	Default setting
01-06	Motor 1 mid-point voltage 2	Default setting
01-07	Motor 1 minimum output frequency	Default setting
01-08	Motor 1 minimum output voltage	Default setting
01-10	Output frequency upper limit	50.00 (Hz)
01-11	Output frequency lower limit	35.00 (Hz)
01-12	Acceleration time 1	15.00 (sec.)

Pr.	Explanation	Settings
01-13	Deceleration time 1	15 (sec.)
01-43	V/F curve selection	2 (V/F curve to the power of 2)
02-05	Multi-function input command 5 (MI5)	15: Rotating speed command from AVI
02-16	Multi-function output 2 (MO1)	11 (Malfunction indication)
03-00	Analog input selection (AI)	1 (Frequency command)
03-28	AI terminal input selection	0 (0–10 V)
03-50	Analog input curve selection	1 (three-point curve of AVI)
07-06	Restart after momentary power loss	2 (Speed tracking by the minimum output frequency)
07-11	Number of times of restart after fault	5 (times)
07-33	Auto-restart interval of fault	60 (sec.)

🕮 Group setting 04: Pump

The following table lists the relevant pump setting application parameters.

Pr.	Explanation	Settings
00-11	Speed control mode	0 (VF)
00-16	Load selection	0 (Normal load)
00-20	Master frequency command source (AUTO, REMOTE)	2 (External analog input)
00-21	Operation command source (AUTO, REMOTE)	1 (External terminals)
00-23	Motor direction control	1 (Disable reverse)
01-00	Motor 1 maximum operation frequency	Default setting
01-01	Output rated / base frequency of motor 1	Default setting
01-02	Motor 1 output voltage	Default setting
01-03	Motor 1 mid-point frequency 1	Default setting
01-04	Motor 1 mid-point voltage 1	Default setting
01-05	Motor 1 mid-point frequency 2	Default setting
01-06	Motor 1 mid-point voltage 2	Default setting
01-07	Motor 1 minimum output frequency	Default setting
01-08	Motor 1 minimum output voltage	Default setting
01-10	Output frequency upper limit	50.00 (Hz)
01-11	Output frequency lower limit	35.00 (Hz)
01-12	Acceleration time 1	15.00 (sec.)
01-13	Deceleration time 1	15 (sec.)
01-43	V/F curve selection	2 (V/F curve to the power of 2)
07-06	Restart after momentary power loss	2 (Speed tracking by the minimum output frequency)
07-11	Number of times of restart after fault	5 (times)
07-33	Auto-restart interval of fault	60 (sec.)

Group setting 05: Conveyor

The following table lists the relevant conveyor setting application parameters.

Pr.	Explanation	Settings
00-11	Speed control mode	0 (VF)
00-16	Load selection	0 (Normal load)
00-20	Master frequency command source (AUTO, REMOTE)	2 (External analog input)
00-21	Operation command source (AUTO, REMOTE)	1 (External terminals)
01-00	Motor 1 maximum operation frequency	Default setting
01-01	Output rated / base frequency of motor 1	Default setting
01-02	Output rated / base voltage of motor 1	Default setting
01-03	Mid-point frequency 1 of motor 1	Default setting
01-04	Mid-point voltage 1 of motor 1	Default setting
01-05	Mid-point frequency 2 of motor 1	Default setting
01-06	Mid-point voltage 2 of motor 1	Default setting
01-07	Minimum output frequency of motor 1	Default setting
01-08	Minimum output voltage of motor 1	Default setting
01-12	Acceleration time 1	10.00 (sec.)
01-13	Deceleration time 1	10 (sec.)

Group setting 07: Packing

The following table lists the relevant packing setting application parameters.

Pr.	Explanation	Settings
00-11	Speed control mode	0 (VF)
00-20	Master frequency command source (AUTO, REMOTE)	0 (Digital keypad)
00-21	Operation command source (AUTO, REMOTE)	2 (RS-485 Communication input)
02-00	Two-wire / Three-wire operation control	1 (two-wire mode 1, power on for operation control (M1: FWD / STOP, M2: REV / STOP))
01-00	Motor 1 maximum operation frequency	Default setting
01-01	Output rated / base frequency of motor 1	Default setting
01-02	Output rated / base voltage of motor 1	Default setting
01-03	Mid-point frequency 1 of motor 1	Default setting
01-04	Mid-point voltage 1 of motor 1	Default setting
01-05	Mid-point frequency 2 of motor 1	Default setting
01-06	Mid-point voltage 2 of motor 1	Default setting
01-07	Minimum output frequency of motor 1	Default setting
01-08	Minimum output voltage of motor 1	Default setting
01-12	Acceleration time 1	10.00 (sec.)
01-13	Deceleration time 1	10 (sec.)

Pr.	Explanation	Settings
01-24	S-curve for acceleration begin time 1	Default setting
01-25	S-curve for acceleration arrival time 2	Default setting
01-26	S-curve for deceleration begin time 1	Default setting
01-27	S-curve for deceleration arrival time 2	Default setting
03-00	Analog input selection (AI)	1 (Frequency command)
03-28	AI terminal input selection	Default setting

📖 Setting 10: Logistics

The following table lists the relevant logistics setting application parameters.

Pr.	Parameter Name	Settings
00-20	Master frequency command source (AUTO, REMOTE)	7 (Digital keypad potentiometer knob)
00-21	Operation command source (AUTO, REMOTE)	1 (External terminals)
01-00	Maximum operation frequency	Default setting
01-01	Output rated / base frequency of motor 1	Default setting
01-02	Output rated / base voltage of motor 1	400.0
01-04	Mid-point voltage 1 of motor 1	20.0
01-06	Mid-point voltage 2 of motor 1	20.0
01-08	Minimum output voltage of motor 1	20.0
01-03	Mid-point frequency 1 of motor 1	1.50
01-07	Minimum output frequency of motor 1	1.50
01-12	Acceleration time 1	3.00 (sec.)
01-13	Deceleration time 1	3 (sec.)
01-24	S-curve for acceleration begin time 1	0.00
01-25	S-curve for acceleration arrival time 2	0.00
01-26	S-curve for deceleration begin time 1	0.00
01-27	S-curve for deceleration arrival time 2	0.00
06-03	Over-current stall prevention during acceleration	200
06-04	Over-current stall prevention during operation	200
06-05	Acceleration / deceleration time selection for stall prevention at constant speed	2: By the second acceleration / deceleration time
07-23	Automatic voltage regulation (AVR) function	1: Disable AVR
07-26	Torque compensation gain	0

🕮 Setting 11: Tension PID

The following table lists the relevant tension PID setting application parameters.

Pr.	Parameter Name	Settings
00-20	Master frequency command source (AUTO, REMOTE)	9 (PID controller)
00-21	Operation command source (AUTO, REMOTE)	1 (External terminals)
01-00	Maximum operation frequency	Default setting
01-12	Acceleration time 1	3 (sec.)
01-13	Deceleration time 1	3 (sec.)
03-00	Analog input selection (AI)	5 (PID feedback signal)
03-50	Analog input curve selection	1: Three-point curve of AVI
03-63	AVI voltage lowest point	0.00
03-65	AVI voltage mid-point	9.99
03-66	AVI proportional mid-point	100%
08-00	Terminal selection of PID feedback	1: Negative PID feedback: by analog input (Pr.03-00, Pr.03-01)
08-01	Proportional gain (P)	10
08-02	Integral time (I)	1.00 (sec.)
08-20	PID mode selection	1: Parallel connection
08-21	Enable PID to change the operation direction	0: Operation direction cannot be changed
08-65	PID target value source	1: Pr.08-66 setting
08-66	PID target value setting	50.00%

🕮 Setting 12: Tension PID + master / auxiliary frequency

The following table lists the relevant tension PID + master / auxiliary frequency setting application parameters.

Pr.	Parameter Name	Settings
00-20	Master frequency command source (AUTO, REMOTE)	9 (PID controller)
00-21	Operation command source (AUTO, REMOTE)	1 (External terminals)
00-35	Auxiliary frequency source	3: Analog input
01-00	Motor 1 Maximum operation frequency	Default setting
01-12	Acceleration time 1	3 (sec.)
01-13	Deceleration time 1	3 (sec.)
03-00	Analog input selection (AVI)	5 (PID feedback signal)
03-10	Reverse setting when analog signal input is negative frequency	0: Negative frequency input is not allowed. The digital keypad or external terminal controls the forward and reverse direction.

Pr.	Parameter Name	Settings
03-12	Analog input gain (ACI)	100.0%
03-50	Analog input curve selection	1: Three-point curve of AVI
03-63	AVI voltage lowest point	0.00
03-65	AVI voltage mid-point	9.99
03-66	AVI proportional mid-point	100%
08-00	Terminal selection of PID feedback	1: Negative PID feedback: by analog input (Pr.03-00, Pr.03-01)
08-01	Proportional gain (P)	10
08-02	Integral time (I)	1.00 (sec.)
08-20	PID mode selection	1: Parallel connection
08-21	Enable PID to change the operation direction	0: Operation direction cannot be changed
08-65	PID target value source	1: Pr.08-66 setting
08-66	PID target value setting	50.00%
08-67	Master and auxiliary reverse running cutoff frequency	10.0%

13-00 – 13-50 Application Parameters (User-Defined)

14 Protection Parameters (2)

You can set this parameter during operation.

14-50	Output Frequency at Malfunction 2
14-54	Output Frequency at Malfunction 3
14-58	Output Frequency at Malfunction 4
14-62	Output Frequency at Malfunction 5
14-66	Output Frequency at Malfunction 6

Default: Read only

Settings 0.00–599.00 Hz

When an error occurs, you can check the output frequency for the malfunction. If the error happens again, this parameter overwrites the previous record.

14-51	DC bus Voltage at Malfunction 2
14-55	DC bus Voltage at Malfunction 3
14-59	DC bus Voltage at Malfunction 4
14-63	DC bus Voltage at Malfunction 5
14-67	DC bus Voltage at Malfunction 6

Default: Read only

Settings 0.0–6553.5 V

When an error occurs, you can check the DC voltage for the malfunction. If the error happens again, this parameter overwrites the previous record.

14-52	Output Current at Malfunction 2
14-56	Output Current at Malfunction 3
14-60	Output Current at Malfunction 4
14-64	Output Current at Malfunction 5
14-68	Output Current at Malfunction 6

Default: Read only

Settings 0.00–655.35 Amp

When an error occurs, you can check the output current for the malfunction. If the error happens again, this parameter overwrites the previous record.

14-53	IGBT Temperature at Malfunction 2
14-57	IGBT Temperature at Malfunction 3
14-61	IGBT Temperature at Malfunction 4
14-65	IGBT Temperature at Malfunction 5
14-69	IGBT Temperature at Malfunction 6

Default: Read only

Settings -3276.7–3276.7°C

When an error occurs, you can check the IGBT temperature for the malfunction. If the error happens again, this parameter overwrites the previous record.

14-70	Fault Record 7
14-71	Fault Record 8
14-72	Fault Record 9
14-73	Fault Record 10

Default: 0

Settings
0: No fault record
1: Over-current during acceleration (ocA)
2: Over-current during deceleration (ocd)
3: Over-current during steady operation (ocn)
4: Ground fault (GFF)
6: Over-current at stop (ocS)
7: Over-voltage during acceleration (ovA)
8: Over-voltage during deceleration (ovd)
9: Over-voltage at constant speed (ovn)
10: Over-voltage at stop (ovS)
11: Low-voltage during acceleration (LvA)
12: Low-voltage during deceleration (Lvd)
13: Low-voltage at constant speed (Lvn)
14: Low-voltage at stop (LvS)
15: Phase loss protection (orP)
16: IGBT overheating (oH1)
18: IGBT temperature detection failure (tH1o)
21: Overload (oL)
22: Electronic thermal relay protection 1 (EoL1)
23: Electronic thermal relay protection 2 (EoL2)
24: Motor overheating (PTC / PT100) (oH3)
26: Over-torque 1 (ot1)
27: Over-torque 2 (ot2)
28: Under current (uC)
31: EEPROM read error (cF2)
33: U-phase error (cd1)
34: V-phase error (cd2)
35: W-phase error (cd3)
36: cc hardware failure (Hd0)
37: oc hardware failure (Hd1)
40: Auto-tuning error (AUE)
41: PID loss ACI (AFE)
48: ACI loss (ACE)
49: External fault input (EF)
50: Emergency stop (EF1)
51: External base block (bb)

52: Password is locked (Pcod)
54: Illegal command (CE1)
55: Illegal data address (CE2)
56: Illegal data value (CE3)
57: Data is written to read-only address (CE4)
58: Modbus transmission time-out (CE10)
63: Over-slip (oSL)
72: S1 internal loop detection error (STL1)
76: STO (STo)
77: S2 internal loop detection error (STL2)
78: S3 internal loop detection error (STL3)
82: Output phase loss U phase (OPL1)
83: Output phase loss V phase (OPL2)
84: Output phase loss W phase (OPL3)
87: Overload protection at low frequency (oL3)
142: Auto-tuning error 1 (DC test stage) (AUE1)
143: Auto-tuning error 2 (high frequency test stage) (AUE2)
149: Total resistance measurement fault (AUE5)
150: No-load current IO measurement fault (AUE6)
151: dq axis inductance measurement fault (AUE7)
152: High frequency injection measurement fault (AUE8)
157: Pump PID feedback error (dEv)

- 🕮 The system records the fault as long as the fault is forced to stop.
- 🕮 Low voltage (Lv) when stopped (LvS warning, no record); low voltage (Lv) when operating (LvA, Lvd, Lvn error, recorded by the system).
- 🕮 When the dEb function is effective and enabled, the drive starts the dEb function and also records the fault code 62 to Pr.06-17–Pr.06-22, Pr.14-70–Pr.14-73 at the same time.

[This page intentionally left blank]

12-2 Adjustment & Application

Standard PM Motor Adjustment Procedure

- Pr.00-11 Speed Control Mode = 2 SVC (Pr.05-33 = 1 or 2)

Adjustment flow chart when starting up WITHOUT load

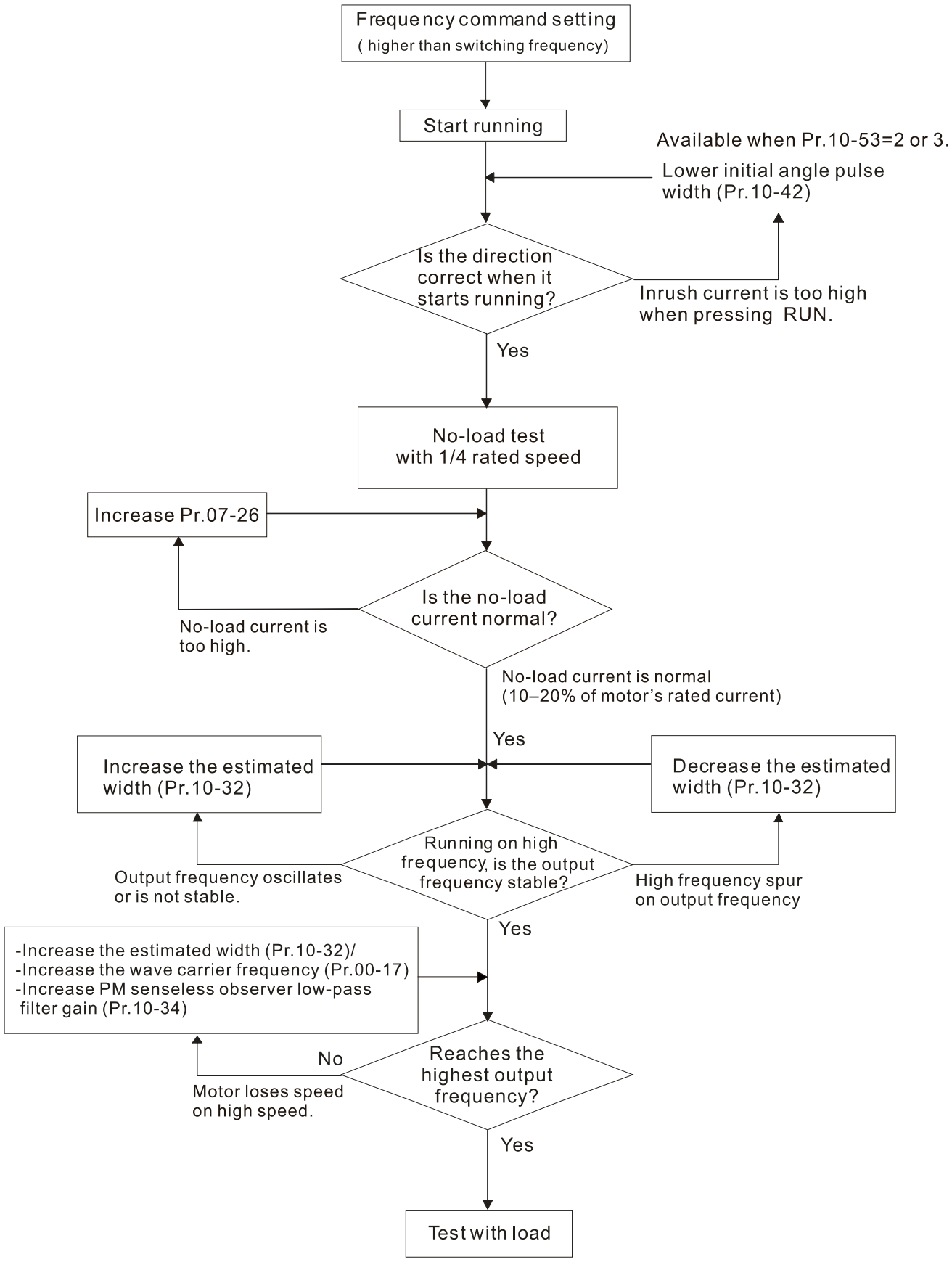

Adjustment flow chart when starting up WITH load

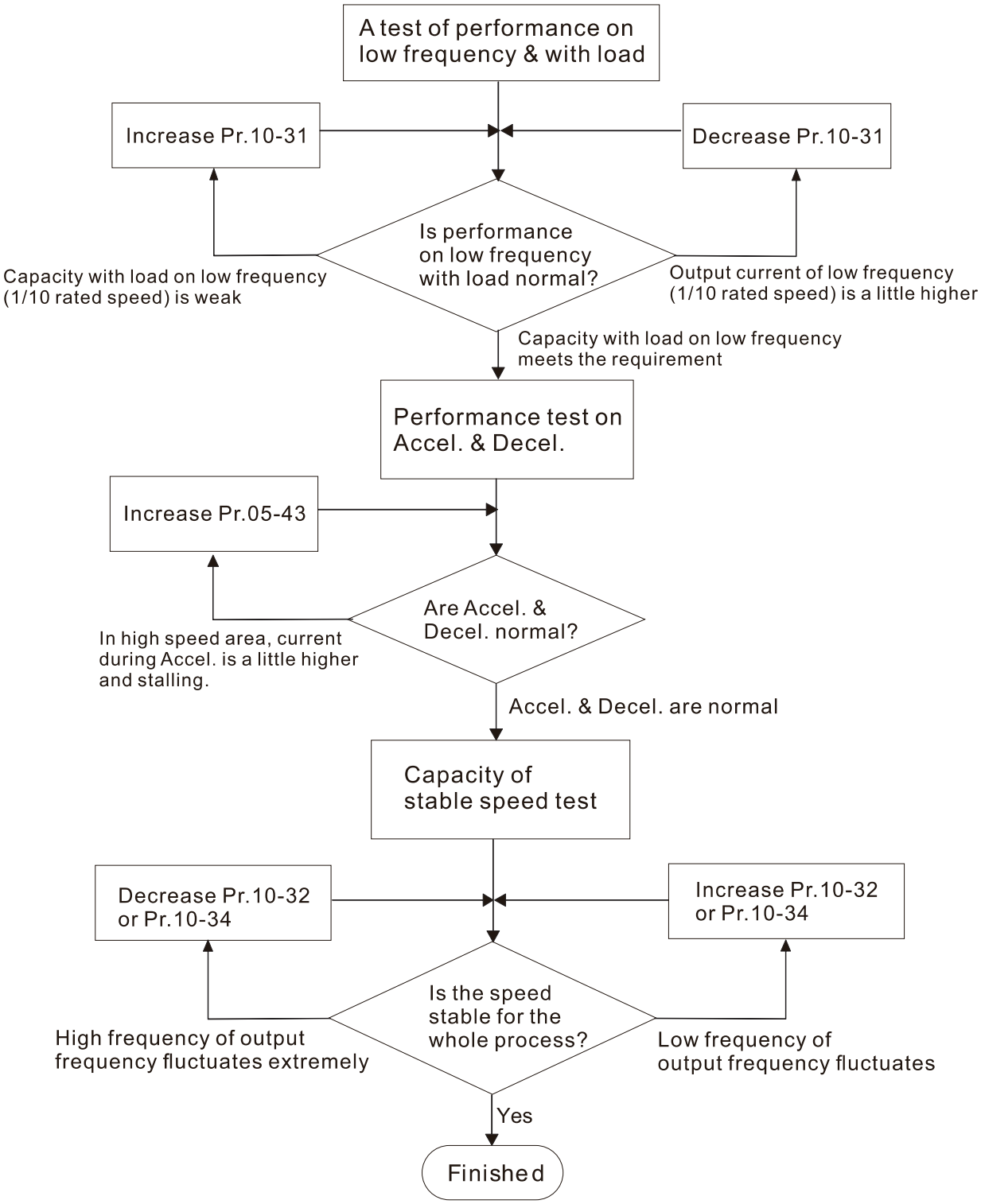

PMSVC control diagram

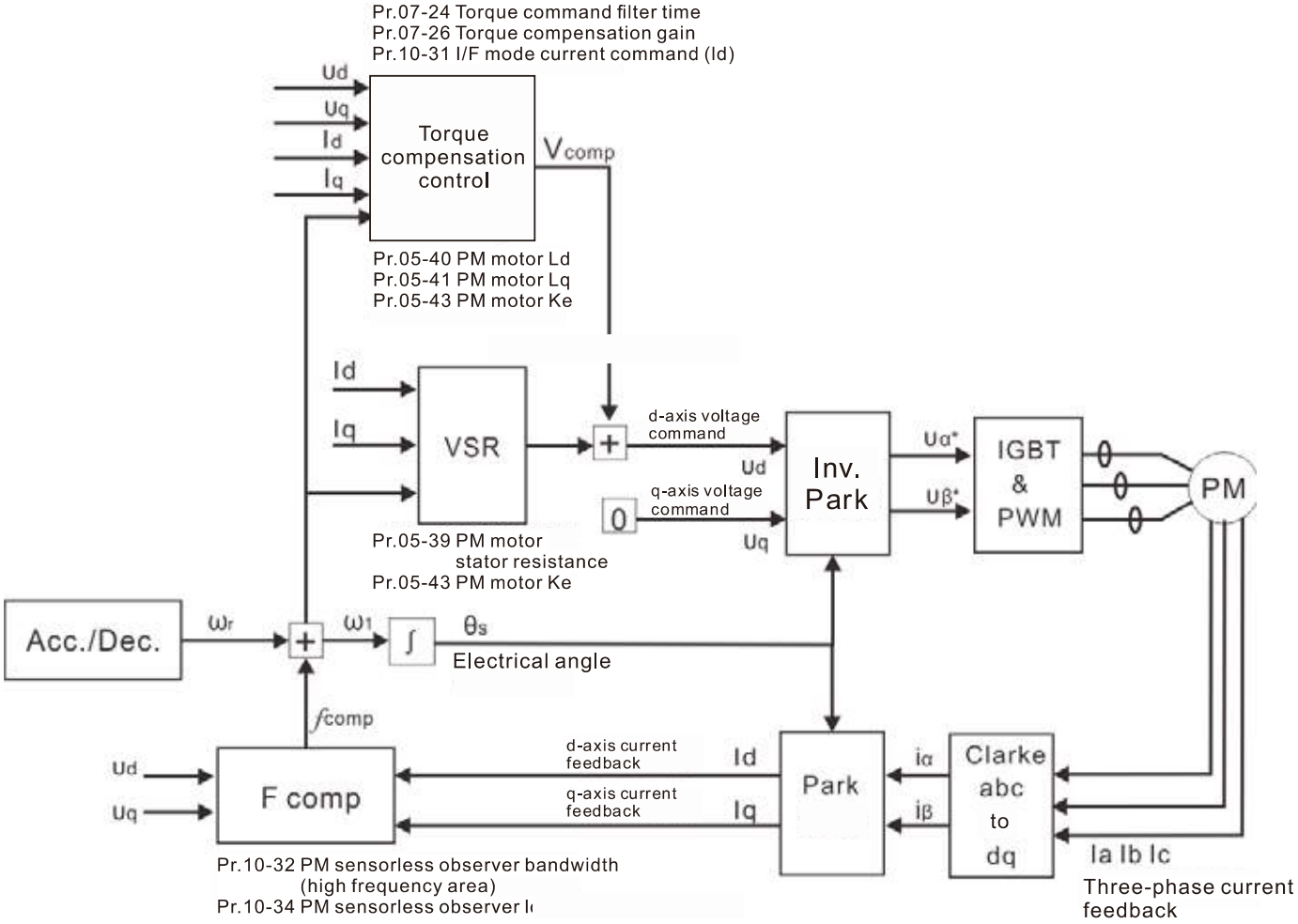

Adjustment procedure

1. Select PM motor control
   Pr.05-33 Induction Motor (IM) or Permanent Magnet Synchronous Motor Selection =1 (SPM) or 2 (IPM)
2. Set up motor parameters according to the motor's nameplate
   Pr.01-01: Rated frequency
   Pr.01-02: Rated voltage
   Pr.05-34: Rated current
   Pr.05-35: Rated Power
   Pr.05-36: Rated speed
   Pr.05-37: Number of poles for the motor
3. Execute PM Auto-tuning (static)
   Set Pr.05-00 Motor Parameter Auto-Tuning =13 (High frequency stall test for PM synchronous motor) and press RUN.
   When you finish tuning, the following parameters are available:
   Pr.05-39: Stator resistance
   Pr.05-40: Permanent magnet motor Ld
   Pr.05-41: Permanent magnet motor Lq
   Pr.05-43: (V / 1000 rpm), the Ke parameter of PM motor (you can calculate this automatically according to power, current, and speed of the motor).
   Pr.10-52: The amplitude of the high frequency signal injected during angle detection.
4. Set the speed control mode: Pr.00-10 Control Mode = 0, Pr.00-11 Speed Control Mode = 2 SVC.
5. Cut off the power after you finish tuning, and then restart.
6. The ratio of the PMSVC control mode is 1:20.
7. When the PMSVC control mode is under 1/20th of the rated speed, the load bearing capacity is 100% of the motor rated torque.
8. PMSVC control mode is not applicable to zero speed control.
9. Start-up with load and forward/reverse load bearing capacity of PMSVC control mode equal to 100% of the rated torque of motor.
10. Set up the speed estimators related parameters.
    Pr.10-31 I/F Mode, Current Command
    Pr.10-32 PM FOC Sensorless Speed Estimator Bandwidth
    Pr.10-34 PM Sensorless Speed Estimator Low-pass Filter Gain
    Pr.10-42 Initial Angle Detection Pulse Value
    Pr.10-49 Zero Voltage Time during Start-up
    Pr.10-51 Injection Frequency
    Pr.10-52 Injection Magnitude
    Pr.10-53 Position Detection Method
11. Speed adjustment parameter
    Pr.07-26 Torque Compensation Gain

Chapter 13 Warning Codes

Summary of Warning Codes

No.	Warning Name	No.	Warning Name
0	No record	20	Over-torque 1 (ot1)
3	Communication error 3 (CE3)	21	Over-torque (ot2)
4	Communication error 4 (CE4)	22_1	Motor over-heating (oH3) PTC
5	Communication error 10 (CE10)	22_2	Motor over-heating (oH3) PT100
7	Save error 1 (SE1)	24	Over-slip warning (oSL)
8	Save error 2 (SE2)	25	Auto-tuning (tUn)
9	IGBT over-heating warning (oH1)	28	Output phase loss (OPHL)
11	PID feedback error (PID)	30	Save error 3 (SE3)
12	ACI analog signal loss (AnL)	102	Deceleration energy backup error (dEb)
13	Under current (uC)	103	PID feedback fault (dEv)

No.	Display on LED Keypad	Warning Name	Description
3	CE3	Communication error 3 (CE3)	RS-485 Modbus illegal data value
Action and Reset			
Action condition		When the length of communication data is too long.	
Action time		Immediately	
Warning treatment parameter		N/A	
Reset method		"Warning" occurs when Pr.09-02 = 0 and the motor drive keeps running. The drive resets automatically when receiving the correct communication data value.	
Reset condition		Immediately reset	
Record		N/A	
Cause		Corrective Actions	
Incorrect communication command from the upper unit		Check if the communication command is correct.	
Malfunction caused by interference		Verify the wiring and grounding of the communication circuit. It is recommended to separate the communication circuit from the main circuit, or wire in 90 degree for effective anti-interference performance.	
Different communication setting from the upper unit		Check if the setting for Pr.09-01 and Pr.09-04 are the same as the setting for the upper unit.	
Disconnection or bad connection of the cable		Check the cable and replace it if necessary.	

No.	Display on LED Keypad	Warning Name	Description
4	CE4	Communication error 4 (CE4)	RS-485 Modbus data is written to read-only address.
Action and Reset			
Action condition		When the data is written to read-only address.	
Action time		Immediately	
Warning treatment parameter		N/A	
Reset method		"Warning" occurs when Pr.09-02 = 0 and the motor drive keeps running. The drive resets automatically when receiving the correct written address of communication data.	
Reset condition		Immediately reset	
Record		N/A	
Cause		Corrective Actions	
Incorrect communication command from the upper unit		Check if the communication command is correct.	
Malfunction caused by interference		Verify the wiring and grounding of the communication circuit. It is recommended to separate the communication circuit from the main circuit, or wire in 90 degree for effective anti-interference performance.	
Different communication setting from the upper unit		Check if the setting for Pr.09-01 and Pr.09-04 are the same as the setting for the upper unit.	
Disconnection or bad connection of the cable		Check the cable and replace it if necessary.	

No.	Display on LCD Keypad	Warning Name	Description
5	CE 10	Communication error 10 (CE10)	RS-485 Modbus transmission time-out
Action and Reset			
Action level		When the communication time exceeds the detection time of Pr.09-03 communication time-out	
Action time		Pr.09-03	
Warning setting parameter		N/A	
Reset method		“Warning” occurs when Pr.09-02 = 0 and the motor drive keeps running. The drive resets automatically when receiving the next communication packet.	
Reset condition		Immediately reset	
Record		N/A	
Cause		Corrective Actions	
The upper unit does not transmit the communication command within Pr.09-03 setting time		Check if the upper unit transmits the communication command within the setting time for Pr.09-03.	
Malfunction caused by interference		Verify the wiring and grounding of the communication circuit. It is recommended to separate the communication circuit from the main circuit, or wire in 90 degree for effective anti-interference performance.	
Different communication setting from the upper unit		Check if the setting for Pr.09-01 and Pr.09-04 are the same as the setting for the upper unit.	
Disconnection or bad connection of the cable		Check the cable and replace it if necessary.	

No.	Display on LED Keypad	Warning Name	Description
7	SE1	Save error 1 (SE1)	Keypad COPY error 1: keypad copy time-out
Action and Reset			
Action condition		"SE1" warning occurs when the keypad does not transmit the COPY command to the drive, and does not transmit any data to the drive again in 10 ms at the time you copy the parameters to the drive.	
Action time		10 ms	
Warning treatment parameter		N/A	
Reset method		Manual reset	
Reset condition		Immediately reset	
Record		N/A	
Cause		Corrective Actions	
Communication connection error		SE1: The causes of error are mostly communication problems between the keypad and control board. Potential causes include communication signal interference and the unacceptable communication command to the Slave. It is not suggested to consider the communication quality at this time. Check if the error occurs randomly, or only occurs when copying certain parameters (the error displays on the upper right corner of the copy page). If you cannot clear the error, please contact Delta.	
Keypad error			
Control board error			

No.	Display on LED Keypad	Warning Name	Description
8	SE2	Save error 2 (SE2)	Keypad COPY error 2: parameter writing error
Action and Reset			
Action condition		"SE2" warning occurs when writing the parameters incorrectly at the time you copy the parameters to the drive. For example, you copy the new firmware version with added parameters to the drive with old firmware version.	
Action time		N/A	
Warning treatment parameter		N/A	
Reset method		Manual reset	
Reset condition		Immediately reset	
Record		N/A	
Cause		Corrective Actions	
Add new parameters to the new firmware version.		SE2: In this stage, the copied data has been transmitted to the Slave. The Slave compares and processes the copied data, and then saves the data to the Data ROM. During the process, the data error (should be attribution error) may occur, or the data cannot be saved to EEPROM. At this time, the warning occurs. It is not suggested to consider the Data ROM at this time. If you cannot clear the error, please contact Delta.	
Malfunction caused by interference		Verify the wiring and grounding of the main circuit, control circuit and the encoder for effective anti-interference performance.	

No.	Display on LED Keypad	Warning Name	Description
9	oH1	IGBT over-heating warning (oH1)	The AC motor drive detects over-heating of IGBT, and over the protection level of oH1 warning. (When Pr.06-15 is higher than the IGBT over-heating level, the drive shows oH1 error without displaying oH1 warning.)

Action and Reset	
Action condition	Pr.06-15
Action time	"oH1" warning occurs when IGBT temperature is higher than Pr.06-15 setting value.
Warning treatment parameter	N/A
Reset method	Auto-reset
Reset condition	The drive auto-resets when IGBT temperature is lower than oH1 warning level minus (–) 5°C.
Record	N/A

Cause	Corrective Actions
Check if the ambient temperature or temperature inside the cabinet is too high, or if there is obstruction in the ventilation hole of the control cabinet.	1. Check the ambient temperature. 2. Regularly inspect the ventilation hole of the control cabinet. 3. Change the installed place if there are heating objects, such as braking resistors, in the surroundings. 4. Install/ add cooling fan or air conditioner to lower the temperature inside the cabinet.
Check if there is any obstruction on the heat sink or if the fan is running.	Remove the obstruction or replace the cooling fan.
Insufficient ventilation space	Increase ventilation space of the drive.
Check if the drive matches the corresponded loading.	1. Decrease the loading. 2. Decrease the carrier. 3. Replace with a drive with larger capacity.
The drive has run 100% or more than 100% of the rated output for a long time.	Replace with a drive with larger capacity.

No.	Display on LED Keypad	Warning Name	Description
11	PId	PID feedback error (PID)	PID feedback loss (warning for analog feedback signal; works only when PID enables)
Action and Reset			
Action condition		When the analog input is lower than 4 mA (only detects analog input 4–20 mA).	
Action time		Pr.08-08	
Warning treatment parameter		Pr.08-09 0: Warn and keep operation 1: Fault and ramp to stop 2: Fault and coast to stop 3: Warn and operate at last frequency	
Reset method		Auto	"Warning" occurs when Pr.08-09 = 0 or 3. The "Warning" automatically clears when the feedback signal is larger than 4 mA.
		Manual	"Fault" occurs when Pr.08-09 = 1 or 2. You must reset manually.
Reset condition		Immediately reset	
Record		Records when Pr.08-09 = 1 or 2 ("Fault"). Does not record when Pr.08-09 = 0 or 3 ("Warning").	
Cause		Corrective Actions	
Loose or broken PID feedback wiring		Tighten the terminals again. Replace with a new cable.	
Feedback device malfunction		Replace with a new feedback device.	
Hardware error		If the PID error still occurs after checking all the wiring, send the drive back to the factory for repair.	

No.	Display on LED Keypad	Warning Name	Description
12	AnL	ACI analog signal loss (AnL)	Analog input current loss (including all analog 4–20 mA signals)
Action and Reset			
Action condition		When the analog input is lower than 4 mA (only detects analog input 4–20 mA)	
Action time		Immediately act	
Warning treatment parameter		Pr.03-19 0: Disable 1: Continue operation at the last frequency (warning, the keypad displays ”AnL”) 2: Decelerate to 0 Hz (warning, the keypad displays ”AnL”) 3: Stop immediately and display “ACE”	
Reset method		Auto	“Warning” occurs when Pr.03-19 = 1 or 2. The “Warning automatically clears when the analog input signal is larger than 4 mA.
		Manual	“Fault” occurs when Pr.03-19 = 3. You must reset manually.
Reset condition		Immediately reset	
Record		Record when Pr.03-19 = 3 (“Fault”) Does not record when Pr.03-19 = 1 or 2 (“Warning”).	
Cause		Corrective Actions	
Loose or broken ACI wiring		Tighten the terminals again. Replace with a new cable.	
External device error		Replace with a new device.	
Hardware error		If the AnL error still occurs after checking all the wiring, send the drive back to the factory for repair.	

No.	Display on LED Keypad	Warning Name	Description
13	uC	Under current (uC)	Low current
Action and Reset			
Action condition		Pr.06-71	
Action time		Pr.06-72	
Warning treatment parameter		Pr.06-73 0: No function 1: Fault and coast to stop 2: Fault and ramp to stop by second deceleration time 3: Warn and continue operation	
Reset method		Auto	"Warning" occurs when Pr.06-73 = 3. The "Warning" automatically clears when the output current is > (Pr.06-71+0.1 A).
		Manual	"Fault" occurs when Pr.06-73 = 1 and 2. You must reset manually.
Reset condition		Immediately reset	
Record		Does not record when Pr.06-73 = 3 and uC displays "Warning".	
Cause		Corrective Actions	
Broken motor cable		Exclude the connection issue of the motor and its load.	
Improper setting for the low current protection		Set the proper settings for Pr.06-71, Pr.06-72 and Pr.06-73.	
Low load		Check the loading status. Make sure the loading matches the motor capacity.	

No.	Display on LED Keypad	Warning Name	Description
20	ot1	Over-torque 1 (ot1)	Over-torque 1 warning
Action and Reset			
Action condition		Pr.06-07	
Action time		Pr.06-08	
Warning treatment parameter		Pr.06-06 = 1 or 3 0: No function 1: Continue operation after over-torque detection during constant speed operation 2: Stop after over-torque detection during constant speed operation 3: Continue operation after over-torque detection during RUN 4: Stop after over-torque detection during RUN	
Reset method		When input current < (Pr.06-07 – 5%), the ot1 warning automatically clears.	
Reset condition		When input current < (Pr.06-07 – 5%), the ot1 warning automatically clears.	
Record		N/A	
Cause		Corrective Actions	
Incorrect parameter setting		Configure the settings for Pr.06-07 and Pr.06-08 again.	
Mechanical error (e.g. mechanical lock due to over-torque)		Remove the causes of malfunction.	
The load is too large.		Decrease the loading. Replace with a motor with larger capacity.	
Accel./ Decel. time and working cycle is too short.		Increase the setting values for Pr.01-12–01-19 (accel./ decel. time).	
V/F voltage is too high.		Adjust the settings for Pr.01-01–01-08 (V/F curve), especially the setting value for the mid-point voltage (if the mid-point voltage is set too small, the load capacity decreases at low-speed).	
The motor capacity is too small.		Replace with a motor with larger capacity.	
Over-load during low-speed operation.		Decrease the loading during low-speed operation. Increase the motor capacity.	
The torque compensation is too large.		Readjust the torque compensation value (Pr.07-26 torque compensation gain) till the output current decreases and the motor does not stall.	
Improper parameter settings for the speed tracking function (including restart after momentary power loss and restart after fault)		Correct the parameter settings for speed tracking. Start the speed tracking function. Adjust the maximum current for Pr.07-09 speed tracking.	

No.	Display on LED Keypad	Warning Name	Description
21	ot2	Over-torque (ot2)	Over-torque 2 warning
Action and Reset			
Action condition		Pr.06-10	
Action time		Pr.06-11	
Warning treatment parameter		Pr.06-09 = 1 or 3 0: No function 1: Continue operation after over-torque detection during constant speed operation 2: Stop after over-torque detection during constant speed operation 3: Continue operation after over-torque detection during RUN 4: Stop after over-torque detection during RUN	
Reset method		When output current < (Pr.06-10 – 5%), the Ot2 warning automatically clears.	
Reset condition		When output current < (Pr.06-10 – 5%), the Ot2 warning automatically clears.	
Record		N/A	
Cause		Corrective Actions	
Incorrect parameter setting		Configure the settings for Pr.06-10 and Pr.06-11 again.	
Mechanical error (e.g. mechanical lock due to over-torque)		Remove the causes of malfunction.	
The load is too large.		Decrease the loading. Replace with a motor with larger capacity.	
Accel./ Decel. time and working cycle is too short.		Increase the setting values for Pr.01-12–01-19 (accel./ decel. time).	
V/F voltage is too high.		Adjust the settings for Pr.01-35–01-42 (V/F curve), especially the setting value for the mid-point voltage (if the mid-point voltage is set too small, the load capacity decreases at low-speed).	
The motor capacity is too small.		Replace with a motor with larger capacity.	
Over-load during low-speed operation.		Decrease the loading during low-speed operation. Increase the motor capacity.	
The torque compensation is too large.		Readjust the torque compensation value (Pr.07-26 torque compensation gain) till the output current decreases and the motor does not stall.	
Improper parameter settings for the speed tracking function (including restart after momentary power loss and restart after fault)		Correct the parameter settings for speed tracking. Start the speed tracking function. Adjust the maximum current for Pr.07-09 speed tracking.	

No.	Display on LED Keypad	Warning Name	Description
22_1	oH3	Motor over-heating (oH3) PTC	Motor over-heating warning. The AC motor drive detects the temperature inside the motor is too high.
Action and Reset			
Action condition		Pr.03-00 = 6 (PTC), PTC input level > Pr.06-30 (default = 50%).	
Action time		Immediately act	
Warning treatment parameter		Error treatment: Pr.06-29 0: Warn and continue operation 1: Fault and ramp to stop 2: Fault and coast to stop 3: No warning When Pr.06-29 = 0 and when the temperature is ≤ Pr.06-30 level, the oH3 warning automatically clears. When Pr.06-29 = 0 (“Warning”), it automatically resets.	
Reset method		When Pr.06-29 = 0, oH3 displays “Warning”. When the temperature is ≤ Pr.06-30 level, the oH3 warning automatically clears.	
Reset condition		When the temperature is ≤ Pr.06-30 level, the oH3 warning automatically clears.	
Record		N/A	
Cause		Corrective Actions	
Motor locked.		Clear the motor lock status.	
The load is too large.		Decrease the loading. Replace with a motor with larger capacity.	
Ambient temperature is too high.		Change the installed place if there are heating devices in the surroundings. Install/ add cooling fan or air conditioner to lower the ambient temperature.	
Motor cooling system error		Check the cooling system to make it work normally.	
Motor fan error		Replace the fan.	
Operates at low-speed too long.		Decrease low-speed operation time. Change to the dedicated motor for the drive. Increase the motor capacity.	
Accel./ Decel. time and working cycle is too short.		Increase the setting values for Pr.01-12–01-19 (accel./ decel. time).	
V/F voltage is too high.		Adjust the settings for Pr.01-01–01-08 (V/F curve), especially the setting value for the mid-point voltage (if the mid-point voltage is set too small, the load capacity decreases at low-speed).	
Check if the motor rated current matches the motor nameplate.		Configure the correct rated current value of the motor again.	
Check if the PTC is properly set and wired.		Check the connection between PTC thermistor and the heat protection.	
Check if the setting for stall prevention is correct.		Set the stall prevention to the proper value.	

Unbalanced three-phase impedance of the motor	Replace the motor.
Harmonics are too high.	Use remedies to reduce harmonics.

No.	Display on LED Keypad	Warning Name	Description
22_2		Motor over-heating (oH3) PT100	Motor over-heating warning. The AC motor drive detects the temperature inside the motor is too high.
Action and Reset			
Action condition			Pr.03-00 = 11 (PT100), PT100 input level > Pr.06-57 (default = 7 V).
Action time			Immediately act
Warning treatment parameter			Error treatment: Pr.06-29 0: Warn and continue operation 1: Fault and ramp to stop 2: Fault and coast to stop 3: No warning When Pr.06-29 = 0 and when the temperature is < Pr.06-56 level, the oH3 warning automatically clears. If the temperature is between Pr.06-56 and Pr.06-57, the frequency outputs according to the operating frequency setting for Pr.06-58.
Reset method			When Pr.06-29 = 0, oH3 displays “Warning”. When the temperature is < Pr.06-56 level, the oH3 warning automatically clears.
Reset condition			When the temperature is < Pr.06-56 level, the oH3 warning automatically clears.
Record			N/A
Cause			Corrective Actions
Motor locked.			Clear the motor lock status.
The load is too large.			Decrease the loading. Replace with a motor with larger capacity.
Ambient temperature is too high.			Change the installed place if there are heating devices in the surroundings. Install/ add cooling fan or air conditioner to lower the ambient temperature.
Motor cooling system error			Check the cooling system to make it work normally.
Motor fan error			Replace the fan.
Operates at low-speed too long.			Decrease low-speed operation time. Change to the dedicated motor for the drive. Increase the motor capacity.
Accel./ Decel. time and working cycle is too short.			Increase the setting values for Pr.01-12–01-19 (accel./ decel. time).
V/F voltage is too high.			Adjust the settings for Pr.01-01–01-08 (V/F curve), especially the setting value for the mid-point voltage (if the mid-point voltage is set too small, the load capacity decreases at low-speed).

Check if the motor rated current matches the motor nameplate.	Configure the correct rated current value of the motor again.
Check if the PT100 is properly set and wired.	Check the connection between PT100 thermistor and the heat protection.
Check if the setting for stall prevention is correct.	Set the stall prevention to the proper value.
Unbalanced three-phase impedance of the motor	Replace the motor.
Harmonics are too high.	Use remedies to reduce harmonics.

No.	Display on LED Keypad	Warning Name	Description
24	oSL	Over-slip warning (oSL)	Over-slip warning. By using the maximum slip (Pr.10-29) as the base, when the drive outputs at constant speed, and the F > H or F < H exceeds Pr.07-29 level and Pr.07-30 setting time, 100% of Pr.07-29 = Pr.10-29.
Action and Reset			
Action condition			When the drive outputs at constant speed, and F>H or F<H exceeds the Pr.07-29 level.
Action time			Pr.07-30
Warning treatment parameter			Pr.07-31 = 0 Warning 0: Warn and continue operation 1: Fault and ramp to stop 2: Fault and coast to stop 3: No warning
Reset method			When Pr.07-31 = 0 and when the drive outputs at constant speed, and F>H or F<H no longer exceeds the Pr.07-29 level, the oSL warning automatically clears.
Reset condition			N/A
Record			N/A
Cause			Corrective Actions
Check if the motor parameter is correct.			Check the motor parameter.
The load is too large.			Decrease the loading.
Check if the settings for Pr.07-29, Pr.07-30 and Pr.10-29 are properly set.			Check the parameter settings for oSL protection.

No.	Display on LED Keypad	Warning Name	Description
25	tUn	Auto-tuning (tUn)	Parameter auto-tuning is processing. When running auto-tuning, the keypad displays “tUn”.
Action and Reset			
Action condition		When running Pr.05-00 motor parameter auto-tuning, the keypad displays “tUn”.	
Action time		N/A	
Warning treatment parameter		N/A	
Reset method		When auto-tuning is finished and no error occurs, the warning automatically clears.	
Reset condition		When auto-tuning is finished and no error occurs.	
Record		N/A	
Cause		Corrective Actions	
The motor parameter is running auto-tuning.		When the auto-tuning is finished, the warning automatically clears.	

No.	Display on LED Keypad	Warning Name	Description
28	oPHL	Output phase loss (OPHL)	Output phase loss
Action and Reset			
Action condition		Pr.06-47	
Action time		N/A	
Warning treatment parameter		Pr.06-45 0: Warn and continue operation 1: Fault and ramp to stop 2: Fault and coast to stop 3: No warning	
Reset method		If Pr.06-45 is set to 0, the OPHL warning automatically clears after the drive stops.	
Reset condition		N/A	
Record		N/A	
Cause		Corrective Actions	
Unbalanced three-phase impedance of the motor		Replace the motor.	
Check if the wiring is incorrect.		Check the cable. Replace the cable.	
Check if the motor is a single-phase motor.		Choose a three-phase motor.	
Check if the current sensor is broken.		Check if the control board cable is loose. If yes, reconnect the cable and run the drive to test. If the error still occurs, send the drive back to the factory for repair. Check if the three-phase current is balanced with a current clamp meter. If the current is balanced and the OPHL error still shows on the display, send the drive back to the factory for repair.	
Check if the drive capacity is larger than the motor capacity.		Choose the drive that matches the motor capacity.	

No.	Display on LED Keypad	Warning Name	Description
30	SE3	Save error 3 (SE3)	Keypad COPY error 3: copy model error
Action and Reset			
Action condition		“SE3” warning occurs when different drive identity codes are found during copying parameters.	
Action time		Immediately act when the error is detected.	
Warning treatment parameter		N/A	
Reset method		Manual reset	
Reset condition		N/A	
Record		N/A	
Cause		Corrective Actions	
Keypad copy between different power range drives		It is mainly to prevent parameter copies between different HP/ models.	

No.	Display on LED Keypad	Warning Name	Descriptions
102	dEb	Deceleration energy backup error (dEb)	When Pr.07-13 is not 0, and the power is suddenly off, causing the DC bus voltage lower than the dEb action level, the dEb function acts and the motor ramps to stop. Then dEb displays on the keypad.
Action and Reset			
Action condition		When Pr.07-13 is not 0, and the DC bus voltage is lower than the level of dEb.	
Action time		Immediately act	
Fault treatment parameter		N/A	
Reset method	Auto	When Pr.07-13 = 2 (dEb with auto-acceleration / auto-deceleration, the drive outputs the frequency after the power is restored): dEb is automatically cleared.	
	Manually	When Pr.07-13 = 1 (dEb with auto-acceleration / auto-deceleration, the drive does not output the frequency after the power is restored): The drive stops when dEb acts and the rotation speed becomes 0 Hz, then the drive can be reset manually.	
Reset condition		Auto: The fault is automatically cleared. Manually: When the drive decelerates to 0 Hz.	
Record		Yes	
Cause		Corrective Actions	
Unstable power source or the power is off		Check the power system.	
There is any other large load operates in the power system		1. Replace power system with a larger capacity. 2. Use a different power system from the large load system.	

No.	Display on LED Keypad	Warning Name	Descriptions
103	dEv	PID feedback fault (dEv)	PID feedback fault
Action and Reset			
Action condition		Verify if the value of the feedback deviation is lower than the setting at Pr.08-13.	
Action time		Pr.08-14	
Fault treatment parameter		Pr.08-62	
Reset method		Manual reset	
Reset condition		When the feedback value is back to the setting range of Pr.08-13, this warning resets automatically.	
Record		Yes	
Cause			
PID feedback loss		Verify if any feedback mistake or loss.	
Pressure sensor fault		Verify if any feedback mistake or loss.	
Insufficient pressure		Verify if any feedback mistake or loss.	

[This page intentionally left blank]

Chapter 14 Fault Codes and Descriptions

Summary of Fault Codes

No.	Fault Name	No.	Fault Name
0	No fault record	37	oc hardware failure (Hd1)
1	Over-current during acceleration (ocA)	40	Auto-tuning error (AUE)
2	Over-current during deceleration (ocd)	41	PID loss ACI (AFE)
3	Over-current during steady operation (ocn)	48	ACI loss (ACE)
4	Ground fault (GFF)	49	External fault input (EF)
6	Over-current at stop (ocS)	50	Emergency stop (EF1)
7	Over-voltage during acceleration (ovA)	51	External base block (bb)
8	Over-voltage during deceleration (ovd)	52	Password is locked (Pcod)
9	Over-voltage at constant speed (ovn)	54	Illegal command (CE1)
10	Over-voltage at stop (ovS)	55	Illegal data address (CE2)
11	Low-voltage during acceleration (LvA)	56	Illegal data value (CE3)
12	Low-voltage during deceleration (Lvd)	57	Data is written to read-only address (CE4)
13	Low-voltage at constant speed (Lvn)	58	Modbus transmission time-out (CE10)
14	Low-voltage at stop (LvS)	63	Over-slip (oSL)
15	Phase loss protection (orP)	72	S1 internal loop detection error (STL1)
16	IGBT overheating (oH1)	76	STO (STo)
18	IGBT temperature detection failure (tH1o)	77	S2 internal loop detection error (STL2)
21	Overload (oL)	78	S3 internal loop detection error (STL3)
22	Electronic thermal relay protection 1 (EoL1)	82	Output phase loss U phase (OPL1)
23	Electronic thermal relay protection 2 (EoL2)	83	Output phase loss V phase (OPL2)
24_1	Motor overheating (PTC) (oH3)	84	Output phase loss W phase (OPL3)
24_2	Motor overheating (PT100) (oH3)	87	Overload protection at low frequency (oL3)
26	Over-torque 1 (ot1)	142	Auto-tuning error 1 (DC test stage) (AUE1)
27	Over-torque 2 (ot2)	143	Auto-tuning error 2 (High frequency test stage) (AUE2)
28	Under current (uC)	149	Total resistance measurement fault (AUE5)
31	EEPROM read error (cF2)	150	No-load current IO measurement fault (AUE6)
33	U-phase error (cd1)	151	dq axis inductance measurement fault (AUE7)
34	V-phase error (cd2)	152	High frequency injection measurement fault (AUE8)
35	W-phase error (cd3)	157	Pump PID feedback error (dEv)
36	cc hardware failure (Hd0)		

No.	Display on LED Keypad	Fault Name	Fault Descriptions
1		Over-current during acceleration (ocA)	Output current exceeds 2.5 times of the rated current during acceleration. When ocA occurs, the drive closes the gate of the output immediately, the motor runs freely, and the display shows an ocA error.
Action and Reset			
Action condition		250% of the rated current (software)	
Action time		Immediately act	
Fault treatment parameter		N/A	
Reset method		Manual reset	
Reset condition		Reset in 5 sec. after the fault is cleared.	
Record		Yes	
Cause		Corrective Actions	
Acceleration time is too short.		1. Increase the acceleration time 2. Increase the acceleration time of S-curve 3. Set auto-acceleration and auto-deceleration parameter (Pr.01-44) 4. Set over-current stall prevention function (Pr.06-03) 5. Replace the drive with a larger capacity model	
Short-circuit at motor output due to poor insulation wiring.		Without considering the short circuits, check the motor cable or replace the cable before turning on the power.	
Check for possible burnout or aging insulation of the motor		Check the motor insulation value with megger. Replace the motor if the insulation is poor.	
The load is too large.		Check if the output current during the whole working process exceeds the AC motor drive's rated current. If yes, replace the AC motor drive with a larger capacity model.	
Impulsive change of the load		Reduce the load or increase the capacity of the AC motor drive.	
Use special motor or motor with larger capacity than the drive		Check the motor capacity (the rated current on the motor's nameplate should ≤ the rated current of the drive)	
Use ON / OFF controller of an electromagnetic contactor at the output (U/V/W) of the drive		Check the action timing of the contactor and make sure it is not turned ON / OFF when the drive outputs the voltage.	
V/F curve setting error		Adjust V/F curve settings and frequency / voltage. When the fault occurs, and the frequency voltage is too high, reduce the voltage.	
Torque compensation is too large.		Adjust the torque compensation (refer to Pr.07-26 torque compensation gain) until the output current reduces and the motor does not stall.	
Malfunction caused by interference		Verify the wiring of the control circuit and wiring / grounding of the main circuit to prevent interference.	
The motor starts when in free run.		Enable the speed tracking during start-up of Pr.07-12.	

Improper parameter settings for the speed tracking function (including restart after momentary power loss and restart after fault)	Correct the parameter settings for speed tracking. 1. Start the speed tracking function. 2. Adjust the maximum current for Pr.07-09 speed tracking.
Incorrect combination of control mode and used motor	Check the settings for Pr.00-11 control mode: 1. For IM motor, Pr.00-11 = 0, 2, Pr.05-33 = 0 2. For PM motor, Pr.00-11 = 2, Pr.05-33 = 1, 2
The length of motor cable is too long.	Increase the AC motor drive's capacity. Install AC reactor(s) on the output side (U/V/W).
Hardware failure	The ocA occurs due to short circuit or ground fault at the output side of the drive. Check for possible short circuits between terminals with the electric meter: B1 corresponds to U, V, W; DC- corresponds to U, V, W; ⏚ corresponds to U, V, W. If short circuits occur, return to the factory for repair.
Check if the setting for stall prevention is correct.	Set the stall prevention to the proper value.

No.	Display on LED Keypad	Fault Name	Fault Descriptions
2	ocd	Over-current during deceleration (ocd)	Output current exceeds 2.5 times of the rated current during deceleration. When ocd occurs, the drive closes the gate of the output immediately, the motor runs freely, and the display shows an ocd error.

Action and Reset	
Action condition	250% of the rated current
Action time	Immediately act
Fault treatment parameter	N/A
Reset method	Manual reset
Reset condition	Reset in 5 sec. after the fault is cleared.
Record	Yes
Cause	**Corrective Actions**
Deceleration time is too short.	1. Increase the deceleration time 2. Increase the deceleration time of S-curve 3. Set auto-acceleration and auto-deceleration parameter (Pr.01-44) 4. Set over-current stall prevention function (Pr.06-03) 5. Replace the drive with a larger capacity model
Check if the mechanical brake of the motor activates too early	Check the action timing of the mechanical brake
Short-circuit at motor output due to poor insulation wiring.	Without considering the short circuits, check the motor cable or replace the cable before turning on the power.
Check for possible burnout or aging insulation of the motor	Check the motor insulation value with megger. Replace the motor if the insulation is poor.

The load is too large.	Check if the output current during the whole working process exceeds the AC motor drive's rated current. If yes, replace the AC motor drive with a larger capacity model.
Impulsive change of the load	Reduce the load or increase the capacity of the AC motor drive.
Use special motor or motor with larger capacity than the drive	Check the motor capacity (the rated current on the motor's nameplate should ≤ the rated current of the drive)
Use ON / OFF controller of an electromagnetic contactor at the output (U/V/W) of the drive	Check the action timing of the contactor and make sure it is not turned ON / OFF when the drive outputs the voltage.
V/F curve setting error	Adjust V/F curve settings and frequency / voltage. When the fault occurs, and the frequency voltage is too high, reduce the voltage.
Torque compensation is too large.	Adjust the torque compensation (refer to Pr.07-26 torque compensation gain) until the output current reduces and the motor does not stall.
Malfunction caused by interference	Verify the wiring of the control circuit and wiring / grounding of the main circuit to prevent interference.
The length of motor cable is too long.	Increase the AC motor drive's capacity. Install AC reactor(s) on the output side (U/V/W).
Hardware failure	The ocd occurs due to short circuit or ground fault at the output side of the drive. Check for possible short circuits between terminals with the electric meter: B1 corresponds to U, V, W; DC- corresponds to U, V, W; ⏚ corresponds to U, V, W. If short circuits occur, return to the factory for repair.
Check if the setting for stall prevention is correct.	Set the stall prevention to the proper value.

No.	Display on LED Keypad	Fault Name	Fault Descriptions
3	ocn	Over-current during steady operation (ocn)	Output current exceeds 2.5 times of the rated current during constant speed. When ocn occurs, the drive closes the gate of the output immediately, the motor runs freely, and the display shows an ocn error.

Action and Reset	
Action condition	250% of the rated current
Action time	Immediately act
Fault treatment parameter	N/A
Reset method	Manual reset
Reset condition	Reset in 5 sec. after the fault is cleared.
Record	Yes

Cause	Corrective Actions
Short-circuit at motor output due to poor insulation wiring.	Without considering the short circuits, check the motor cable or replace the cable before turning on the power.
Check for possible shaft lock, burnout or aging insulation of the motor	Troubleshoot the motor shaft lock. Check the motor insulation value with megger. Replace the motor if the insulation is poor.
Impulsive change of the load	Reduce the load or increase the capacity of the AC motor drive.
Use special motor or motor with larger capacity than the drive	Check the motor capacity (the rated current on the motor's nameplate should ≤ the rated current of the drive).
Use ON / OFF controller of an electromagnetic contactor at the output (U/V/W) of the drive	Check the action timing of the contactor and make sure it is not turned ON / OFF when the drive outputs the voltage.
V/F curve setting error	Adjust V/F curve settings and frequency / voltage. When the fault occurs, and the frequency voltage is too high, reduce the voltage.
Torque compensation is too large.	Adjust the torque compensation (refer to Pr.07-26 torque compensation gain) until the output current reduces and the motor does not stall.
Malfunction caused by interference	Verify the wiring of the control circuit and wiring / grounding of the main circuit to prevent interference.
The length of motor cable is too long.	Increase the AC motor drive's capacity. Install AC reactor(s) on the output side (U/V/W).
Hardware failure	The ocn occurs due to short circuit or ground fault at the output side of the drive. Check for possible short circuits between terminals with the electric meter: B1 corresponds to U, V, W; DC- corresponds to U, V, W; ⏚ corresponds to U, V, W. If short circuits occur, return to the factory for repair.

No.	Display on LED Keypad	Fault Name	Fault Descriptions
4	GFF	Ground fault (GFF)	When (one of) the output terminal(s) is grounded, short circuit current is larger than Pr.06-60 setting value, and the detection time is longer than Pr.06-61 time setting, GFF occurs. NOTE: the short circuit protection is provided for AC motor drive protection, not to protect you.
Action and Reset			
Action condition		Pr.06-60 (Default = 60%)	
Action time		Pr.06-61 (Default = 0.10 sec.)	
Fault treatment parameter		N/A	
Reset method		Manual reset	
Reset condition		Reset in 5 sec. after the fault is cleared.	
Record		Yes	
Cause		Corrective Actions	
Motor burnout or aging insulation occurred.		Check the motor insulation value with megger. Replace the motor if the insulation is poor.	
Short circuit due to broken cable		Troubleshoot the short circuit. Replace the cable.	
Larger stray capacitance in the cable and terminal ⏚		If the motor cable length exceeds 100 m, decrease the setting value for carrier frequency. Take remedies to reduce stray capacitance.	
Malfunction caused by interference		Verify the grounding and wiring of the communication circuit. It is recommended to separate the communication circuit from the main circuit, or wire in 90 degree for effective sufficient anti-interference performance.	
Hardware failure		Cycle the power after checking the status of motor, cable and cable length. If GFF still exists, return to the factory for repair.	

No.	Display on LED Keypad	Fault Name	Fault Descriptions
6		Over-current at stop (ocS)	Over-current or hardware failure in current detection at stop. Cycle the power after ocS occurs. If the hardware failure occurs, the display shows cd1, cd2 or cd3.
Action and Reset			
Action condition		240% of the rated current	
Action time		Immediately act	
Fault treatment parameter		N/A	
Reset method		Manual reset	
Reset condition		Reset in 5 sec. after the fault is cleared.	
Record		Yes	
Cause		Corrective Actions	
Malfunction caused by interference		Verify the wiring of the control circuit and wiring / grounding of the main circuit to prevent interference.	
Hardware failure		Check if other error codes such as cd1–cd3 occur after cycling the power. If yes, return to the factory for repair.	

No.	Display on LED Keypad	Fault Name	Fault Descriptions
7		Over-voltage during acceleration (ovA)	DC bus over-voltage during acceleration. When ovA occurs, the drive closes the gate of the output, the motor runs freely, and the display shows an ovA error.
Action and Reset			
Action condition		230V models: 410 V_{DC} 460V models: 820 V_{DC}	
Action time		Immediately act when DC bus voltage is higher than the level.	
Fault treatment parameter		N/A	
Reset method		Manual reset	
Reset condition		Reset only when DC bus voltage is lower than 90% of the over-voltage level.	
Record		Yes	
Cause		Corrective Actions	
Acceleration is too slow (e.g. It it takes too much time to accelerate when an elevator is descending, the ovA fault occurs.)		Decrease the acceleration time. Use brake unit or DC bus. Replace the drive with a larger capacity model.	
The setting for stall prevention level is smaller than no-load current.		The setting for stall prevention level should be larger than no-load current.	
Power voltage is too high.		Check if the input voltage is within the rated AC motor drive input voltage range, and check for possible voltage spikes.	
ON / OFF switch action of phase-in capacitor in the same power system		If the phase-in capacitor or active power supply unit acts in the same power system, the input voltage may surge abnormally in a short time. In this case, install an AC reactor.	
Regenerative voltage of motor inertia		Use over-voltage stall prevention function (Pr.06-01). Use auto-acceleration and auto-deceleration setting (Pr.01-44). Use a brake unit or DC bus.	
Acceleration time is too short.		Check if the over-voltage warning occurs after acceleration stops. When the warning occurs, do the following: 1. Increase the acceleration time 2. Set Pr.06-01 over-voltage stall prevention 3. Increase the setting value for Pr.01-25 S-curve acceleration arrival time 2	
Motor ground fault		The ground short circuit current charges the capacitor in the main circuit through the power. Check if there is ground fault on the motor cable, wiring box and its internal terminals. Troubleshoot the ground fault.	
Incorrect wiring of brake resistor or brake unit		Check the wiring of brake resistor or brake unit.	
Malfunction caused by interference		Verify the wiring of the control circuit and wiring / grounding of the main circuit to prevent interference.	

No.	Display on LED Keypad	Fault Name	Fault Descriptions
8		Over-voltage during deceleration (ovd)	DC bus over-voltage during deceleration. When ovd occurs, the drive closes the gate of the output, the motor runs freely, and the display shows an ovd error.
Action and Reset			
Action condition		230V models: 410 V_{DC} 460V models: 820 V_{DC}	
Action time		Immediately act when DC bus voltage is higher than the level.	
Fault treatment parameter		N/A	
Reset method		Manual reset	
Reset condition		Reset only when DC bus voltage is lower than 90% of the over-voltage level.	
Record		Yes	
Cause		Corrective Actions	
Deceleration time is too short, causing too large regenerative energy of the load.		1. Increase the setting value for Pr.01-13, Pr.01-15, Pr.01-17 and Pr.01-19 (deceleration time). 2. Connect brake resistor, brake unit or COMMON DC bus to the drive. 3. Reduce the brake frequency. 4. Replace the drive with a larger capacity model. 5. Use S-curve acceleration / deceleration. 6. Use over-voltage stall prevention (Pr.06-01). 7. Use auto-acceleration and auto-deceleration (Pr.01-44). Adjust braking level (Pr.07-01 or the jumper of the brake unit).	
The setting for stall prevention level is smaller than no-load current.		The setting for stall prevention level should be larger than no-load current.	
Power voltage is too high.		Check if the input voltage is within the rated AC motor drive input voltage range, and check for possible voltage spikes.	
ON / OFF switch action of phase-in capacitor in the same power system		If the phase-in capacitor or active power supply unit acts in the same power system, the input voltage may surge abnormally in a short time. In this case, install an AC reactor.	
Motor ground fault		The ground short circuit current charges the capacitor in the main circuit through the power. Check if there is ground fault on the motor cable, wiring box and its internal terminals. Troubleshoot the ground fault.	
Incorrect wiring of brake resistor or brake unit		Check the wiring of brake resistor or brake unit.	
Malfunction caused by interference		Verify the wiring of the control circuit and wiring / grounding of the main circuit to prevent interference.	

No.	Display on LED Keypad	Fault Name	Fault Descriptions
9		Over-voltage at constant speed (ovn)	DC bus over-voltage at constant speed. When ovn occurs, the drive closes the gate of the output, motor runs freely, and the display shows an ovn error.
Action and Reset			
Action condition		230V models: 410 V_{DC} 460V models: 820 V_{DC}	
Action time		Immediately act when DC bus voltage is higher than the level.	
Fault treatment parameter		N/A	
Reset method		Manual reset	
Reset condition		Reset only when DC bus voltage is lower than 90% of the over-voltage level.	
Record		Yes	
Cause		Corrective Actions	
Impulsive change of the load		1. Connect brake resistor, brake unit or DC bus to the drive. 2. Reduce the load. 3. Replace the drive with a larger capacity model. 4. Adjust braking level (Pr.07-01 or the bolt position of the brake unit).	
The setting for stall prevention level is smaller than no-load current.		The setting for stall prevention level should be larger than no-load current.	
Regenerative voltage of motor inertia		Use over-voltage stall prevention function (Pr.06-01) Use a brake unit or DC bus	
Power voltage is too high.		Check if the input voltage is within the rated AC motor drive input voltage range, and check for possible voltage spikes.	
ON / OFF switch action of phase-in capacitor in the same power system		If the phase-in capacitor or active power supply unit acts in the same power system, the input voltage may surge abnormally in a short time. In this case, install an AC reactor.	
Motor ground fault		The ground short circuit current charges the capacitor in the main circuit through the power. Check if there is ground fault on the motor cable, wiring box and its internal terminals. Troubleshoot the ground fault.	
Incorrect wiring of brake resistor or brake unit		Check the wiring of brake resistor or brake unit.	
Malfunction caused by interference		Verify the wiring of the control circuit and wiring / grounding of the main circuit to prevent interference.	

No.	Display on LED Keypad	Fault Name	Fault Descriptions
10	ovS	Over-voltage at stop (ovS)	Over-voltage at stop
Action and Reset			
Action condition		230V models: 410 V_{DC} 460V models: 820 V_{DC}	
Action time		Immediately act when DC bus voltage is higher than the level.	
Fault treatment parameter		N/A	
Reset method		Manual reset	
Reset condition		Reset only when DC bus voltage is lower than 90% of the over-voltage level.	
Record		Yes	
Cause		Corrective Actions	
Power voltage is too high.		Check if the input voltage is within the rated AC motor drive input voltage range, and check for possible voltage spikes.	
ON / OFF switch action of phase-in capacitor in the same power system		If the phase-in capacitor or active power supply unit acts in the same power system, the input voltage may surge abnormally in a short time. In this case, install an AC reactor.	
Incorrect wiring of brake resistor or brake unit		Check the wiring of brake resistor or brake unit.	
Malfunction caused by interference		Verify the wiring of the control circuit and wiring / grounding of the main circuit to prevent interference.	
Hardware failure in voltage detection		Check if other error codes such as cd1–cd3 occur after cycling the power. If yes, return to the factory for repair.	
Motor ground fault		The ground short circuit current charges the capacitor in the main circuit through the power. Check if there is ground fault on the motor cable, wiring box and its internal terminals. Troubleshoot the ground fault.	

No.	Display on LED Keypad	Fault Name	Fault Descriptions
11	LvA	Low-voltage during acceleration (LvA)	DC bus voltage is lower than Pr.06-00 setting value during acceleration.
Action and Reset			
Action condition		Pr.06-00 (Default = depending on the model)	
Action time		Immediately act when DC bus voltage is lower than Pr.06-00.	
Fault treatment parameter		N/A	
Reset method		Manual reset	
Reset condition		Reset when DC bus voltage is higher than Pr.06-00 + 30 V (230V models) / + 60 V (460V models).	
Record		Yes	
Cause		Corrective Actions	
Power-off		Improve power supply condition.	
Power voltage changes		Adjust voltage to the power range of the drive.	
Start up the motor with large capacity.		Check the power system. Increase the capacity of power equipment.	
The load is too large.		Reduce the load. Increase the drive capacity. Increase the acceleration time.	
DC bus		Install DC reactor(s).	
Check if there is short circuit plate or any DC reactor installed between terminal +1 and +2.		Connect short circuit plate or DC reactor between terminal +1 and +2. If the error still exists, return to the factory for repair.	

No.	Display on LED Keypad	Fault Name	Fault Descriptions
12	Lvd	Low-voltage during deceleration (Lvd)	DC bus voltage is lower than Pr.06-00 setting value during deceleration.
Action and Reset			
Action condition		Pr.06-00 (Default = depending on the model)	
Action time		Immediate activate when DC bus voltage is lower than Pr.06-00.	
Fault treatment parameter		N/A	
Reset method		Manual reset	
Reset condition		Reset when DC bus voltage is higher than Pr.06-00 + 30 V (230V models) / 60 V (460V models).	
Record		Yes	
Cause		Corrective Actions	
Power-off		Improve power supply condition.	
Power voltage changes		Adjust voltage to the power range of the drive.	
Start up the motor with large capacity.		Check the power system. Increase the capacity of power equipment.	
Sudden load		Reduce the load. Increase the drive capacity.	
DC bus		Install DC reactor(s).	

No.	Display on LED Keypad	Fault Name	Fault Descriptions
13	Lvn	Low-voltage at constant speed (Lvn)	DC bus voltage is lower than Pr.06-00 setting value at constant speed.
Action and Reset			
Action condition		Pr.06-00 (Default = depending on the model)	
Action time		Immediately act when DC bus voltage is lower than Pr.06-00.	
Fault treatment parameter		N/A	
Reset method		Manual reset	
Reset condition		Reset when DC bus voltage is higher than Pr.06-00 + 30 V (230V models) / + 60 V (460V models).	
Record		Yes	
Cause		Corrective Actions	
Power-off		Improve power supply condition.	
Power voltage changes		Adjust voltage to the power range of the drive.	
Start up the motor with large capacity.		Check the power system. Increase the capacity of power equipment.	
Sudden load		Reduce the load. Increase the drive capacity.	
DC bus		Install DC reactor(s).	

No.	Display on LED Keypad	Fault Name	Fault Descriptions
14	LvS	Low-voltage at stop (LvS)	1. DC bus voltage is lower than Pr.06-00 setting value at stop. 2. Hardware failure in voltage detection.
Action and Reset			
Action condition		Pr.06-00 (Default = depending on the model)	
Action time		Immediately act when DC bus voltage is lower than Pr.06-00.	
Fault treatment parameter		N/A	
Reset method		Manual / Auto 230V models: Lv level + 30 V_{DC} + 500 ms 460V models: Lv level + 60 V_{DC} + 500 ms	
Reset condition		500 ms	
Record		Yes	
Cause		Corrective Actions	
Power-off		Improve power supply condition.	
Incorrect drive models		Check if the power specification matches the drive.	
Power voltage changes		Adjust voltage to the power range of the drive. Cycle the power after checking the power. If LvS error still exists, return to the factory for repair.	
Start up the motor with large capacity.		Check the power system. Increase the capacity of power equipment.	
DC bus		Install DC reactor(s).	

No.	Display on LED Keypad	Fault Name	Fault Descriptions
15	orP	Phase loss protection (OrP)	Phase loss of power input
Action and Reset			
Action condition		DC bus is lower than Pr.07-00, and DC bus ripple is too high.	
Action time		N/A	
Fault treatment parameter		Pr.06-53	
Reset method		Manual reset	
Reset condition		Immediately reset when DC bus is higher than Pr.07-00.	
Record		Yes	
Cause		Corrective Actions	
Phase loss of input power		Correctly install the wiring of the main circuit power.	
Single phase power input to three-phase models		Choose the model whose power matches the voltage.	
Power voltage changes		If the main circuit power works normally, verify the main circuit. Cycle the power after checking the power. If OrP error still exists, return to the factory for repair.	
Loose wiring terminal of input power		Tighten the terminal screws according to the torque described in the user manual.	
The input cable of three-phase power is cut off.		Wire correctly. Replace the cut-off cable.	
Unbalanced three-phase of input power		Check the power three-phase status.	
Use Open Delta Connection system (V-V system)		Install reactors or use drives with higher power.	

No.	Display on LED Keypad	Fault Name	Fault Descriptions
16	oH1	IGBT overheating (oH1)	IGBT temperature exceeds the protection level. (Refer to Pr.06-15)
Action and Reset			
Action condition		When Pr.06-15 is higher than the IGBT overheating protection level, oH1 error occurs instead of oH1 warning.	
Action time		IGBT temperature exceeds the protection level for more than 100 ms, oH1 error occurs.	
Fault treatment parameter		N/A	
Reset method		Manual reset	
Reset condition		Reset only when IGBT temperature is lower than oH1 error level minus (-) 10°C.	
Record		Yes	
Cause		Corrective Actions	
Check if the ambient temperature or temperature inside the control cabinet is too high, or if there is obstruction in the ventilation hole of the control cabinet.		1. Check the ambient temperature. 2. Regularly inspect the ventilation hole of the control cabinet. 3. Change the installed place if there are heating objects, such as braking resistors, in the surroundings. 4. Install / add cooling fan or air conditioner to lower the temperature inside the cabinet.	
Check if there is any obstruction on the heat sink or if the fan is running.		Remove the obstruction or replace the cooling fan.	
Insufficient ventilation space		Increase ventilation space of the drive.	
Check if the drive matches the corresponding load.		1. Reduce the load. 2. Reduce the carrier. 3. Replace the drive with a larger capacity model.	
The drive has run 100% or more than 100% of the rated output for a long time.		Replace the drive with a larger capacity model	

No.	Display on LED Keypad	Fault Name	Fault Descriptions
18	tH1o	IGBT temperature detection failure (tH1o)	IGBT hardware failure in temperature detection
Action and Reset			
Action condition		NTC broken or wiring failure	
Action time		When the IGBT temperature is higher than the protection level, and detection time exceeds 100 ms, the tH1o protection activates.	
Fault treatment parameter		N/A	
Reset method		Manual reset	
Reset condition		Immediately reset	
Record		Yes	
Cause		Corrective Actions	
Hardware failure		Wait for 10 minutes, and then cycle the power. Check if tH1o protection still exists. If yes, return to the factory for repair.	

No.	Display on LED Keypad	Fault Name	Fault Descriptions
21	oL	Overload (oL)	The AC motor drive detects excessive drive output current. Overload capacity: • Normal duty: Sustains for one minute when the drive outputs 120% of the drive's rated output current. Sustains for three seconds when the drive outputs 150% of the drive's rated output current. • Heavy duty: Sustains for one minute when the drive outputs 150% of the drive's rated output current. Sustains for three seconds when the drive outputs 200% of the drive's rated output current.
Action and Reset			
Action condition		Based on overload curve and derating curve (Pr.06-55)	
Action time		When the load is higher than the protection level and exceeds allowable time, the oL protection activates.	
Fault treatment parameter		N/A	
Reset method		Manual reset	
Reset condition		Reset in 5 sec. after the fault is cleared.	
Record		Yes	
Cause		Corrective Actions	
The load is too large.		Reduce the load.	

Accel./Decel. time and the working cycle are too short.	Increase the setting values for Pr.01-12–01-19 (accel. / decel. time).
V/F voltage is too high.	Adjust the settings for Pr.01-01–01-08 (V/F curve), especially the setting value for the mid-point voltage (if the mid-point voltage is set too low, the load capacity decreases at low speed). Refer to the V/F curve selection of Pr.01-43.
The capacity of the drive is too small.	Replace the drive with a larger capacity model.
Overload during low-speed operation.	Reduce the load during low-speed operation. Increase the drive capacity. Decrease the carrier frequency of Pr.00-17.
Torque compensation is too large.	Adjust the torque compensation (refer to Pr.07-26 torque compensation gain) until the output current reduces and the motor does not stall.
Check if the setting for stall prevention is correct.	Set the stall prevention to the proper value.
Output phase loss	Check the status of three-phase motor. Check if the cable is broken or the screws are loose.
Improper parameter settings for the speed tracking function (including restart after momentary power loss and restart after fault)	Correct the parameter settings for speed tracking. 1. Start the speed tracking function. 2. Adjust the maximum current for Pr.07-09 speed tracking.

No.	Display on LED Keypad	Fault Name	Fault Descriptions
22	EoL 1	Electronic thermal relay 1 protection (EoL1)	Electronic thermal relay 1 protection. The drive coasts to stop once it activates.
Action and Reset			
Action condition		Start counting when output current > 150% of motor 1 rated current.	
Action time		Pr.06-14 (if the output current is larger than 105% of motor 1 rated current again within 60 sec., the counting time reduces and is less than Pr.06-14.)	
Fault treatment parameter		N/A	
Reset method		Manual reset	
Reset condition		Reset in 5 sec. after the fault is cleared.	
Record		Yes	
Cause		Corrective Actions	
The load is too large.		Reduce the load.	
Accel./Decel. time and the working cycle are too short.		Increase the setting values for Pr.01-12–01-19 (accel./decel. time)	
V/F voltage is too high.		Adjust the settings for Pr.01-01–01-08 (V/F curve), especially the setting value for the mid-point voltage (if the mid-point voltage is set too low, the load capacity decreases at low speed). Refer to the V/F curve selection of Pr.01-43.	
Overload during low-speed operation.When using a general motor, even it operates below rated current, an overload may still occur during low-speed operation.		Decrease low-speed operation time. Replace the drive with a dedicated to VFD model. Increase the motor capacity.	
When using VFD dedicated motors, Pr.06-13 = 0 (electronic thermal relay selection motor 1 = 0 inverter motor)		Pr.06-13 = 1 electronic thermal relay selection motor 1 = standard motor (motor with fan on the shaft).	
Incorrect value of electronic thermal relay		Reset to the correct motor rated current.	
The maximum motor frequency is set too low.		Reset to the correct motor rated frequency.	
One drive to multiple motors		Set Pr.06-13 = 2 electronic thermal relay selection motor 1 = disable, and install thermal relay on each motor.	
Check if the setting for stall prevention is correct.		Set the stall prevention to the proper value.	
Torque compensation is too large.		Adjust the torque compensation (refer to Pr.07-26 torque compensation gain) until the current reduces and the motor does no stall.	
Motor fan error		Check the status of the fan, or replace the fan.	
Unbalanced three-phase impedance of the motor		Replace the motor.	

No.	Display on LED Keypad	Fault Name	Fault Descriptions
23	EoL2	Electronic thermal relay 2 protection (EoL2)	Electronic thermal relay 2 protection. The drive coasts to stop once it activates.
Action and Reset			
Action condition		Start counting when output current > 150% of motor 2 rated current.	
Action time		Pr.06-28 (If the output current is larger than 105% of motor 2 rated current again within 60 sec., the counting time reduces and is less than Pr.06-28.)	
Fault treatment parameter		N/A	
Reset method		Manual reset	
Reset condition		Reset in 5 sec. after the fault is cleared.	
Record		Yes	
Cause		Corrective Actions	
The load is too large.		Reduce the load.	
Accel./Decel. time and the working cycle are too short.		Increase the setting values for Pr.01-12–01-19 (accel./decel. time)	
V/F voltage is too high.		Adjust the settings for Pr.01-01–Pr.01-08 (V/F curve), especially the setting value for the mid-point voltage (if the mid-point voltage is set too low, the load capacity decreases at low speed). Refer to the V/F curve selection setting of Pr.01-43.	
Overload during low-speed operation. When using a general motor, even it operates below rated current, an overload may still occur during low-speed operation.		Decrease low-speed operation time. Replace the drive with a dedicated to VFD model. Increase the motor capacity.	
When using VFD dedicated motors, Pr.06-27 = 0 (electronic thermal relay selection motor 2 = 0 inverter motor)		Pr.06-27 = 1 Electronic thermal relay selection motor 2 = standard motor (motor with fan on the shaft).	
Incorrect value of electronic thermal relay		Reset to the correct motor rated current.	
The maximum motor frequency is set too low.		Reset to the correct motor rated frequency.	
One drive to multiple motors		Set Pr.06-27 = 2 Electronic thermal relay selection motor 2 = disable, and install thermal relay on each motor.	
Check if the setting for stall prevention is correct.		Set the stall prevention to the proper value.	
Torque compensation is too large.		Adjust the torque compensation (refer to Pr.07-26 torque compensation gain) until the current reduces and the motor does no stall.	
Motor fan error		Check the status of the fan, or replace the fan.	
Unbalanced three-phase impedance of the motor		Replace the motor.	

No.	Display on LED Keypad	Fault Name	Fault Descriptions
24_1	oH3	Motor overheating (oH3) PTC	Motor overheating (PTC) (Pr.03-00 = 6 PTC). When PTC input > Pr.06-30, the fault treatment acts according to Pr.06-29.
Action and Reset			
Action condition		PTC input value > Pr.06-30 setting (Default = 50%)	
Action time		Immediately act	
Fault treatment parameter		Pr.06-29 0: Warn and continue operation 1: Fault and ramp to stop 2: Fault and coast to stop 3: No warning	
Reset method		When Pr.06-29 = 0, oH3 is a “Warning”. The “Warning” is automatically cleared. When Pr.06-29 = 1 or 2, oH3 is a “Fault”. You must reset manually.	
Reset condition		Immediately reset	
Record		When Pr.06-29 = 1 or 2, oH3 is a fault, and the fault is recorded.	
Cause		Corrective Actions	
Motor shaft lock		Remove the shaft lock.	
The load is too large.		Reduce the load. Increase the motor capacity.	
Ambient temperature is too high.		Change the installed place If there are heating devices in the surroundings. Install / add cooling fan or air conditioner to lower the ambient temperature.	
Motor cooling system error		Check the cooling system to make it work normally.	
Motor fan error		Replace the fan.	
Operate at low-speed too long.		Decrease low-speed operation time. Replace the motor with a dedicated to VFD model. Increase the motor capacity.	
Accel./Decel. time and working cycle are too short.		Increase the setting values for Pr.01-12–01-19 (accel./decel. time).	
V/F voltage is too high.		Adjust settings for Pr.01-01–01-08 (V/F curve), especially the setting value for the mid-point voltage (if the mid-point voltage is set too low, the load capacity decreases at low speed). Refer to the V/F curve selection of Pr.01-43.	
Check if the motor rated current matches that on the motor nameplate.		Reset to the correct motor rated current.	
Check if the PTC is properly set and wired.		Check the connection between PTC thermistor and the heat protection.	
Check if the setting for stall prevention is correct.		Set the stall prevention to the proper value.	
Unbalanced three-phase impedance of the motor		Replace the motor.	
Harmonics are too high.		Use remedies to reduce harmonics.	

No.	Display on LED Keypad	Fault Name	Fault Descriptions
24_2	oH3	Motor overheating (oH3) PT100	Motor overheating (PT100) (Pr.03-00 = 11 PT100). When PT100 input > Pr.06-57 (default = 7 V), the fault treatment acts according to Pr.06-29.
Action and Reset			
Action condition		PT100 input value > Pr.06-57 setting (default = 7 V)	
Action time		Immediately act	
Fault treatment parameter		Pr.06-29 0: Warn and continue operation 1: Fault and ramp to stop 2: Fault and coast to stop 3: No warning	
Reset method		When Pr.06-29 = 0 and the temperature < Pr.06-56, oH3 is automatically cleared. When Pr.06-29 = 1 or 2, oH3 is a “Fault”. You must reset manually	
Reset condition		Immediately reset	
Record		When Pr.06-29 = 1 or 2, oH3 is a “Fault”, and the fault is recorded.	
Cause		Corrective Actions	
Motor shaft lock		Remove the shaft lock.	
The load is too large.		Reduce the load. Increase the motor capacity.	
Ambient temperature is too high.		Change the installed place If there are heating devices in the surroundings. Install / add cooling fan or air conditioner to lower the ambient temperature.	
Motor cooling system error		Check the cooling system to make it work normally.	
Motor fan error		Replace the fan	
Operate at low-speed too long.		Decrease low-speed operation time. Replace the motor with a dedicated to VFD model. Increase the motor capacity.	
Accel./Decel. time and working cycle are too short.		Increase the setting values for Pr.01-12–01-19 (accel./decel. time).	
V/F voltage is too high.		Adjust settings for Pr.01-01–01-08 (V/F curve), especially the setting value for the mid-point voltage (if the mid-point voltage is set too low, the load capacity decreases at low speed). Refer to the V/F curve selection of Pr.01-43.	
Check if the motor rated current matches that on the motor nameplate.		Reset to the correct motor rated current.	
Check if the PT100 is properly set and wired.		Check connection of PT100 thermistor.	
Check if the setting for stall prevention is correct.		Set the stall prevention to the proper value.	
Unbalanced three-phase impedance of the motor		Replace the motor.	
Harmonics are too high.		Use remedies to reduce harmonics.	

No.	Display on LED Keypad	Fault Name	Fault Descriptions
26	ot1	Over-torque 1 (ot1)	When output current exceeds the over-torque detection level (Pr.06-07) and exceeds over-torque detection time (Pr.06-08), and when Pr.06-06 or Pr.06-09 is set to 2 or 4, the ot1 error displays.

Action and Reset		
Action condition	Pr.06-07	
Action time	Pr.06-08	
Fault treatment parameter	Pr.06-06 0: No function 1: Continue operation after over-torque detection during constant speed operation 2: Stop after over-torque detection during constant speed operation 3: Continue operation after over-torque detection during RUN 4: Stop after over-torque detection during RUN	
Reset method	Auto	When Pr.06-06 = 1 or 3, ot1 is a “Warning”. The warning is automatically cleared when the output current < (Pr.06-07 - 5%).
	Manual	When Pr.06-06 = 2 or 4, ot1 is a “Fault”. You must reset manually.
Reset condition	Immediately reset	
Record	When Pr.06-06 = 2 or 4, ot1 is a “Fault”, and the fault is recorded.	

Cause	Corrective Actions
Incorrect parameter setting	Reset Pr.06-07 and 06-08.
Mechanical error (e.g. over-torque, mechanical lock)	Remove the causes of malfunction.
The load is too large.	Reduce the load. Replace the motor with a larger capacity model.
Accel./Decel. time and working cycle are too short.	Increase the setting values for Pr.01-12–01-19 (accel./decel. time).
V/F voltage is too high.	Adjust settings for Pr.01-01–01-08 (V/F curve), especially the setting value for the mid-point voltage (if the mid-point voltage is set too low, the load capacity decreases at low speed). Refer to the V/F curve selection of Pr.01-43.
The motor capacity is too small.	Replace the motor with a larger capacity model.
Overload during low-speed operation.	Decrease low-speed operation time. Increase the motor capacity.
Torque compensation is too large.	Adjust the torque compensation (refer to Pr.07-26 torque compensation gain) until the current reduces and the motor does no stall.
Improper parameter settings for speed tracking function (including restart after momentary power loss and restart after fault)	Correct the parameter settings for speed tracking. 1. Start the speed tracking function. 2. Adjust the maximum current for Pr.07-09 speed tracking.

No.	Display on LED Keypad	Fault Name	Fault Descriptions
27	ot2	Over-torque 2 (ot2)	When output current exceeds the over-torque detection level (Pr.06-10) and exceeds over-torque detection time (Pr.06-11), and when Pr.06-09 is set to 2 or 4, the ot2 error displays.

Action and Reset		
Action condition	Pr.06-10	
Action time	Pr.06-11	
Fault treatment parameter	Pr.06-09 0: No function 1:Continue operation after over-torque detection during constant speed operation 2: Stop after over-torque detection during constant speed operation 3: Continue operation after over-torque detection during RUN 4: Stop after over-torque detection during RUN	
Reset method	Auto	When Pr.06-09 = 1 or 3, ot2 is a “Warning”. The warning is automatically cleared when the output current < (Pr.06-10 – 5%).
	Manual	When Pr.06-09 = 2 or 4, ot2 is a “Fault”. You must reset manually.
Reset condition	Immediately reset	
Record	When Pr.06-09 = 2 or 4, ot2 is a “Fault”, and the fault is recorded.	

Cause	Corrective Actions
Incorrect parameter setting	Reset Pr.06-10 and Pr.06-11.
Mechanical error (e.g. over-torque, mechanical lock)	Remove the causes of malfunction.
The load is too large.	Reduce the load. Replace the motor with a larger capacity model.
Accel./Decel. time and working cycle are too short.	Increase the setting values for Pr.01-12–01-19 (accel./decel. time).
V/F voltage is too high.	Adjust the settings for Pr.01-35–Pr.01-42 (V/F curve), especially the setting value for the mid-point voltage (if the mid-point voltage is set too low, the load capacity decreases at low speed).
The motor capacity is too small.	Replace the motor with a larger capacity model.
Overload during low-speed operation	Decrease low-speed operation time. Increase the motor capacity.
Torque compensation is too large.	Adjust the torque compensation (refer to Pr.07-26 torque compensation gain) until the current reduces and the motor does no stall.
Improper parameter settings for speed tracking function (including restart at momentary power loss and restart after fault)	Correct the parameter settings for speed tracking. 1. Start the speed tracking function. 2. Adjust the maximum current for Pr.07-09 speed tracking.

No.	Display on LED Keypad	Fault Name	Fault Descriptions
28	uC	Under current (uC)	Low current detection
Action and Reset			
Action condition	Pr.06-71		
Action time	Pr.06-72		
Fault treatment parameter	Pr.06-73 0: No function 1: Fault and coast to stop 2: Fault and ramp to stop by the second deceleration time 3: Warn and continue operation		
Reset method	Auto	When Pr.06-73 = 3, uC is a “Warning”. The warning is automatically cleared when the output current > (Pr.06-71 + 0.1 A).	
	Manual	When Pr.06-73 = 1 or 2, uC is a “Fault”. You must reset manually.	
Reset condition	Immediately reset		
Record	When Pr.06-73 = 1 or 2, uC is a “Fault”, and the fault is recorded.		
Cause	Corrective Actions		
Motor cable disconnection	Troubleshoot the connection between the motor and the load.		
Improper setting of low-current protection	Reset Pr.06-71, Pr.06-72 and Pr.06-73 to proper settings.		
The load is too low.	Check the load status. Check if the motor capacity matches the load.		

No.	Display on LED Keypad	Fault Name	Fault Descriptions
31	cF2	EEPROM read error (cF2)	Internal EEPROM cannot be read.
Action and Reset			
Action condition	Firmware internal detection		
Action time	cF2 acts immediately when the drive detects the fault.		
Fault treatment parameter	N/A		
Reset method	Manual reset		
Reset condition	Immediately reset		
Record	Yes		
Cause	Corrective Actions		
Internal EEPROM cannot be read.	Press RESET key. If cF2 error still displays on the keypad, return to the factory for repair. Reset the parameter to the default setting. If cF2 error still displays on the keypad, return to the factory for repair. Cycle the power. If cF2 error still exists, return to the factory for repair.		

No.	Display on LED Keypad	Fault Name	Fault Descriptions
33	cd1	U-phase error (cd1)	U-phase current detection error when power is ON.
Action and Reset			
Action condition		Hardware detection	
Action time		cd1 acts immediately when the drive detects the fault.	
Fault treatment parameter		N/A	
Reset method		Power-off	
Reset condition		N/A	
Record		Yes	
Cause		Corrective Actions	
Hardware failure		Cycle the power. If the fault code still displays on the keypad, return to the factory for repair.	

No.	Display on LED Keypad	Fault Name	Fault Descriptions
34	cd2	V-phase error (cd2)	V-phase current detection error when power is ON.
Action and Reset			
Action condition		Hardware detection	
Action time		cd2 acts immediately when the drive detects the fault.	
Fault treatment parameter		N/A	
Reset method		Power-off	
Reset condition		N/A	
Record		Yes	
Cause		Corrective Actions	
Hardware failure		Cycle the power. If the fault code still displays on the keypad, return to the factory for repair.	

No.	Display on LED Keypad	Fault Name	Fault Descriptions
35	cd3	W-phase error (cd3)	W-phase current detection error when power is ON.
Action and Reset			
Action condition		Hardware detection	
Action time		cd3 acts immediately when the drive detects the fault.	
Fault treatment parameter		N/A	
Reset method		Power-off	
Reset condition		N/A	
Record		Yes	
Cause		Corrective Actions	
Hardware failure		Cycle the power. If the fault code still displays on the keypad, return to the factory for repair.	

No.	Display on LED Keypad	Fault Name	Fault Descriptions
36	Hd0	cc Hardware failure (Hd0)	cc (current clamp) hardware protection error when power is ON.
Action and Reset			
Action condition		Hardware detection	
Action time		Hd0 acts immediately when the drive detects the fault.	
Fault treatment parameter		N/A	
Reset method		Power-off	
Reset condition		N/A	
Record		Yes	
Cause		Corrective Actions	
Hardware failure		Cycle the power. If the fault code still displays on the keypad, return to the factory for repair.	

No.	Display on LED Keypad	Fault Name	Fault Descriptions
37	Hd1	oc Hardware failure (Hd1)	oc hardware protection error when power is ON.
Action and Reset			
Action condition		Hardware detection	
Action time		Hd1 acts immediately when the drive detects the fault.	
Fault treatment parameter		N/A	
Reset method		Power-off	
Reset condition		N/A	
Record		Yes	
Cause		Corrective Actions	
Hardware failure		Cycle the power. If the fault code still displays on the keypad, return to the factory for repair.	

No.	Display on LED Keypad	Fault Name	Fault Descriptions
40	AUE	Auto-tuning error (AUE)	Motor auto-tuning error
Action and Reset			
Action condition		Hardware detection	
Action time		Immediately act	
Fault treatment parameter		N/A	
Reset method		Manual reset	
Reset condition		Immediately reset	
Record		Yes	
Cause		Corrective Actions	
Press STOP key during auto-tuning.		Re-execute auto-tuning.	
Incorrect motor capacity (too large or too small) and parameter setting		Check motor capacity and related parameters. Set the correct parameters, that is Pr.01-01–01-02. Set Pr.01-00 larger than motor rated frequency.	
Incorrect motor wiring		Check the wiring.	
Motor shaft lock		Remove the cause of motor shaft lock.	
The electromagnetic contactor is OFF at output side (U/V/W) of the drive		Make sure the electromagnetic valve is ON.	
The load is too large.		Reduce the load. Replace the motor with a larger capacity model.	
Accel./Decel. time is too short.		Increase the setting values for Pr.01-12–01-19 (Accel./Decel. time).	

No.	Display on LED Keypad	Fault Name	Fault Descriptions
41	AFE	PID loss ACI (AFE)	PID feedback loss (analog feedback signal is only valid when the PID function is enabled.)
Action and Reset			
Action condition		When the analog input < 4 mA (only detects 4–20 mA analog input)	
Action time		Pr.08-08	
Fault treatment parameter		Pr.08-09 0: Warn and continue operation 1: Fault and ramp to stop 2: Fault and coast to stop 3: Warn and operate at last frequency	
Reset method		Auto	When Pr.08-09 = 3 or 4, AFE is a “Warning”. When the feedback signal is > 4 mA, the ”Warning” is automatically cleared.
		Manual	When Pr.08-09 = 1 or 2, AFE is a “Fault”. You must rest manually.
Reset condition		Immediately reset	
Record		When Pr.08-09 = 1 or 2, AFE is a “Fault”, and the fault is recorded; when Pr.08-09 = 3 or 4, AFE is a “Warning”, and the warning is not recorded.	
Cause		Corrective Actions	
PID feedback cable is loose or cut off.		Tighten the terminal. Replace the cable with a new one.	
Feedback device failure		Replace the device with a new one.	
Hardware failure		Check all the wiring. If the AFE fault still displays on the keypad, return to the factory for repair.	

No.	Display on LED Keypad	Fault Name	Fault Descriptions
48	ACE	ACI loss (ACE)	Analog input loss (including all the 4–20 mA analog signal)
Action and Reset			
Action condition		When the analog input is < 4 mA (only detects 4–20 mA analog input)	
Action time		Immediately act	
Fault treatment parameter		Pr.03-19 0: Disable 1: Continue operation at the last frequency (warning, AnL displays on the keypad) 2: Decelerate to 0 Hz (warning, AnL displays on the keypad) 3: Stop immediately and display “ACE”	
Reset method		Auto	When Pr.03-19 = 1 or 2, ACE is a “Warning”. When analog input signal is > 4 mA, the “Warning” is automatically cleared.
		Manual	When Pr.03-19 = 3, ACE is a “Fault”. You must reset manually.
Reset condition		Immediately reset	
Record		When Pr.03-19 = 3, ACE is a “Fault”, and the fault is recorded. When Pr.03-19 = 1 or 2, ACE is a “Warning”, and it is not recorded.	
Cause		Corrective Actions	
ACI cable is loose or cut off.		Tighten the terminal. Replace the cable with a new one.	
External device failure		Replace the device with a new one.	
Hardware failure		Check all the wiring. If the ACE fault still displays on the keypad, return to the factory for repair.	

No.	Display on LED Keypad	Fault Name	Fault Descriptions
49	EF	External fault (EF)	External fault. When the drive decelerates based on the setting of Pr.07-20, the EF fault displays on the keypad
Action and Reset			
Action condition		MI = EF and the MI terminal is ON.	
Action time		Immediately act	
Fault treatment parameter		Pr.07-20 0: Coast to stop 1: Stop by first deceleration time 2: Stop by second deceleration time 3: Stop by third deceleration time 4: Stop by fourth deceleration time 5: System deceleration 6: Automatic deceleration	
Reset method		Manual reset	
Reset condition		Manual reset only after the external fault is cleared (terminal status is recovered).	
Record		Yes	
Cause		Corrective Actions	
External fault		Press RESET key after the fault is cleared.	

No.	Display on LED Keypad	Fault Name	Fault Descriptions
50	EF1	Emergency stop (EF1)	When the contact of MI = EF1 is ON, the output stops immediately and displays EF1 on the keypad. The motor is in free running.
Action and Reset			
Action condition		MI = EF1 and the MI terminal is ON.	
Action time		Immediately act	
Fault treatment parameter		N/A	
Reset method		Manual reset	
Reset condition		Manual reset only after the external fault is cleared (terminal status is recovered).	
Record		Yes	
Cause		Corrective Actions	
MI = EF1 activates		Verify if the system is back to normal condition, and then press RESET key to return to the default.	

No.	Display on LED Keypad	Fault Name	Fault Descriptions
51	bb	External base block (bb)	When the contact of MI = bb is ON, the output stops immediately and displays bb on the keypad. The motor is in free running.
Action and Reset			
Action condition		MI = bb and the MI terminal is ON.	
Action time		Immediately act	
Fault treatment parameter		N/A	
Reset method		The display “bb” is automatically cleared after the fault is cleared.	
Reset condition		N/A	
Record		No	
Cause		Corrective Actions	
MI = bb activates		Verify if the system is back to normal condition and then press RESET key to return to the default.	

No.	Display on LED Keypad	Fault Name	Fault Descriptions
52	Pcod	Password is locked (Pcod)	Entering the wrong password three consecutive times
Action and Reset			
Action condition		Entering the wrong password three consecutive times	
Action time		Immediately act	
Fault treatment parameter		N/A	
Reset method		Manual reset	
Reset condition		Power-off	
Record		Yes	
Cause		Corrective Actions	
Incorrect password input through Pr.00-07		1. Input the correct password after rebooting the motor drive. 2. If you forget the password, enter 9999. 3. Press ENTER, and then enter 9999 again. 4. You must finish pressing ENTER within 10 seconds. If not, you must repeat the entering. After you successfully unlock the password, the parameter settings return to the default.	

No.	Display on LED Keypad	Fault Name	Fault Descriptions
54	CE1	Illegal command (CE1)	Communication command is illegal
Action and Reset			
Action condition	When the function code is not 03, 06, 10, or 63.		
Action time	Immediately act		
Fault treatment parameter	N/A		
Reset method	Manual reset		
Reset condition	Immediately reset		
Record	No		
Cause	Corrective Actions		
Incorrect communication command from the upper unit	Check if the communication command is correct.		
Malfunction caused by interference	Verify the wiring and grounding of the communication circuit. It is recommended to separate the communication circuit from the main circuit, or wire in 90 degree for effective anti-interference performance.		
Different communication setting from the upper unit	Check if the setting for Pr.09-01 and Pr.09-04 is the same as the setting for the upper unit.		
Disconnection or bad connection of the cable	Check the cable and replace it if necessary.		

No.	Display on LED Keypad	Fault Name	Fault Descriptions
55	CE2	Illegal data address (CE2)	Data address is illegal.
Action and Reset			
Action condition	When the data address is correct.		
Action time	Immediately act		
Fault treatment parameter	N/A		
Reset method	Manual reset		
Reset condition	Immediately reset		
Record	No		
Cause	Corrective Actions		
Incorrect communication command from the upper unit	Check if the communication command is correct.		
Malfunction caused by interference	Verify the wiring and grounding of the communication circuit. It is recommended to separate the communication circuit from the main circuit, or wire in 90 degree for effective anti-interference performance.		
Different communication setting from the upper unit	Check if the setting for Pr.09-01 and Pr.09-04 is the same as the setting for the upper unit.		
Disconnection or bad connection of the cable	Check the cable and replace it if necessary.		

No.	Display on LED Keypad	Fault Name	Fault Descriptions
56	CE3	Illegal data value (CE3)	Data value is illegal.
Action and Reset			
Action condition		When the data length is too long.	
Action time		Immediately act	
Fault treatment parameter		N/A	
Reset method		Manual reset	
Reset condition		Immediately reset	
Record		No	
Cause		Corrective Actions	
Incorrect communication command from the upper unit		Check if the communication command is correct.	
Malfunction caused by interference		Verify the wiring and grounding of the communication circuit. It is recommended to separate the communication circuit from the main circuit, or wire in 90 degree for effective anti-interference performance.	
Different communication setting from the upper unit		Check if the setting for Pr.09-01 and Pr.09-04 is the same as the setting for the upper unit.	
Disconnection or bad connection of the cable		Check the cable and replace it if necessary.	

No.	Display on LED Keypad	Fault Name	Fault Descriptions
57	CE4	Data is written to read-only address (CE4)	Data is written to read-only address.
Action and Reset			
Action condition		When the data is written to read-only address.	
Action time		Immediately act	
Fault treatment parameter		N/A	
Reset method		Manual reset	
Reset condition		Immediately reset	
Record		No	
Cause		Corrective Actions	
Incorrect communication command from the upper unit		Check if the communication command is correct.	
Malfunction caused by interference		Verify the wiring and grounding of the communication circuit. It is recommended to separate the communication circuit from the main circuit, or wire in 90 degree for effective anti-interference performance.	
Different communication setting from the upper unit		Check if the setting for Pr.09-01 and Pr.09-04 is the same as the setting for the upper unit.	
Disconnection or bad connection of the cable		Check the cable and replace it if necessary.	

No.	Display on LED Keypad	Fault Name	Fault Descriptions
58	CE 10	Modbus transmission time-out (CE10)	Modbus transmission time-out occurs.
Action and Reset			
Action condition		When the communication time exceeds the detection time for Pr.09-03 time-out.	
Action time		Pr.09-03	
Fault treatment parameter		Pr.09-02 0: Warn and continue operation 1: Fault and ramp to stop 2: Fault and coast to stop 3: No warning, no fault and continue operation	
Reset method		Manual reset	
Reset condition		Immediately reset	
Record		Yes	
Cause		Corrective Actions	
The upper unit does not transmit the communication command within Pr.09-03 setting time.		Check if the upper unit transmits the communication command within the setting time for Pr.09-03.	
Malfunction caused by interference		Verify the wiring and grounding of the communication circuit. It is recommended to separate the communication circuit from the main circuit, or wire in 90 degree for effective anti-interference performance.	
Different communication setting from the upper unit		Check if the setting for Pr.09-01 and Pr.09-04 is the same as the setting for the upper unit.	
Disconnection or bad connection of the cable		Check the cable and replace it if necessary.	

No.	Display on LED Keypad	Fault Name	Fault Descriptions
63	oSL	Over-slip (oSL)	The slip is abnormal. By using the maximum slip (Pr.10-29) as the base, when the drive outputs at constant speed, and the F > H or F < H exceeds Pr.07-29 level and Pr.07-30 setting time, oSL occurs. oSL occurs only when using a general induction motor.
Action and Reset			
Action condition		Pr.07-29 (100% of Pr.07-29 = Pr.10-29 Top limit of frequency deviation)	
Action time		Pr.07-30	
Fault treatment parameter		Pr.07-31 0: Warn and continue operation 1: Fault and ramp to stop 2: Fault and coast to stop 3: No warning	
Reset method		Auto	When Pr.07-31 = 0, oSL is a “Warming” When the drive outputs at constant speed, and the F > H or F < H no longer exceeds the Pr.07-29 level, the oSL warning is automatically cleared.
		Manual	When Pr.07-31 = 1 or 2, oSL is a “Fault”. You must reset manually.
Reset condition		Immediately reset	
Record		When Pr.07-31 = 1 or 2, oSL is a “Fault”, and the fault is recorded.	
Cause		Corrective Actions	
Check if the motor setting is correct.		Check the motor parameter.	
The load is too large.		Decrease the load.	
Check if the settings for Pr.07-29, Pr.07-30 and Pr.10-29 are properly set.		Check the parameter settings for oSL protection.	

No.	Display on LED Keypad	Fault Name	Fault Descriptions
72	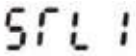	S1 internal loop detection error (STL1)	S1–DCM internal loop detection error
Action and Reset			
Action condition		Hardware detection	
Action time		Immediately act	
Fault treatment parameter		N/A	
Reset method		Hardware failure, and cannot reset. Cycle the power.	
Reset condition		N/A	
Record		Yes	
Cause		Corrective Actions	
STO jumper cap is not installed or is off.		Install the jumper cap.	
External STO card S1 and +24V short circuit line are not connected.		Check the wiring of the S1 and +24V terminal.	
External STO card is installed incorrectly or pin fractures.		Check if STO card is correctly installed.	
Insufficient external input voltage		Check that the input voltage maintains at least 11V.	
False trigger		Reset the emergency switch (ON: activated) and cycle the power.	
Hardware failure		After you make sure all the wiring is correct, if STL1 fault still exists after cycling the power, please contact Delta.	

No.	Display on LED Keypad	Fault Name	Fault Descriptions
76	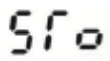	STO (STO)	Safe Torque Off function activates.
Action and Reset			
Action condition		Hardware detection	
Action time		Immediately act	
Fault treatment parameter		N/A	
Reset method		Auto	When Pr.06-44 = 1 and after STO error is cleared, it automatically resets.
		Manual	When Pr.06-44 = 0 and after STO error is cleared, reset it manually.
Reset condition		Reset only after STO error is cleared.	
Record		Yes	
Cause		Corrective Actions	
The switch action of S1/+24V and S2/+24V		Check the wiring of the S1 and S2 terminals.	
External STO card is installed incorrectly or pin fractures.		Check if STO card is correctly installed.	
False trigger		Reset the emergency switch (ON: activated) and cycle the power.	
Insufficient external input voltage		Check that the input voltage maintains at least 11V.	
Hardware failure		After you make sure all the wiring is correct, if STO fault still exists after cycling the power, please contact Delta.	

No.	Display on LED Keypad	Fault Name	Fault Descriptions
77	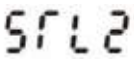	S2 internal loop detection error (STL2)	S2–DCM internal loop detection error
Action and Reset			
Action condition		Hardware detection	
Action time		Immediately act	
Fault treatment parameter		N/A	
Reset method		Hardware failure, and cannot reset. Cycle the power.	
Reset condition		N/A	
Record		Yes	
Cause		Corrective Actions	
STO jumper cap is not installed or is off.		Install the jumper cap.	
External STO card S1 and +24V short circuit line are not connected.		Check the wiring of the S1 and +24V terminals.	
External STO card is installed incorrectly or pin fractures.		Check if STO card is correctly installed.	
Insufficient external input voltage		Check that the input voltage maintains at least 11V.	
False trigger		Reset the emergency switch (ON: activated) and cycle the power.	
Hardware failure		After you make sure all the wiring is correct, if STL2 fault still exists after cycling the power, please contact Delta.	

No.	Display on LED Keypad	Fault Name	Fault Descriptions
78	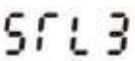	S3 internal loop detection error (STL3)	S1–DCM & S2–DCM internal loop detection error
Action and Reset			
Action condition		Hardware detection	
Action time		Immediately act	
Fault treatment parameter		N/A	
Reset method		Hardware failure, and cannot reset. Cycle the power.	
Reset condition		N/A	
Record		Yes	
Cause		Corrective Actions	
STO jumper cap is not installed or is off.		Install the jumper cap.	
Incorrect wiring of STO card		Check all the wiring of STO card.	
External STO card is installed incorrectly or pin fractures.		Check if STO card is correctly installed.	
False trigger		Reset the emergency switch (ON: activated) and cycle the power.	
Hardware failure		After you make sure all the wiring is correct, if STL3 fault still exists after cycling the power, please contact Delta.	

No.	Display on LED Keypad	Fault Name	Fault Descriptions
79	Aoc	U-phase short circuit (Aoc)	U-phase short circuit detected when output wiring detection is performed before the drive runs.
Action and Reset			
Action condition		240% of the rated current	
Action time		Immediately act	
Fault treatment parameter		N/A	
Reset method		Manual reset	
Reset condition		Reset in 5 sec. after the fault is cleared.	
Record		Yes	
Cause		Corrective Actions	
Incorrect motor wiring		Check if the motor's internal wiring and the UVW wiring of the drive output terminal are correct.	
Short-circuit at motor output due to poor insulation wiring.		Without considering the short circuits, check the motor cable or replace the cable before turning on the power.	
Check for possible burnout or aging insulation of the motor.		Check the motor insulation value with megger. Replace the motor if the insulation is poor.	
Malfunction caused by interference		Verify the wiring of the control circuit and wiring / grounding of the main circuit to prevent interference.	
The length of motor cable is too long.		Increase the AC motor drive's capacity. Install AC reactor(s) on the output side (U/V/W).	
Hardware failure		The Aoc occurs due to short circuit or ground fault at the output side of the drive. Check for possible short circuits between terminals with the electric meter: B1 corresponds to U, V, W; DC- corresponds to U, V, W; ⏚ corresponds to U, V, W. If short circuits occur, return to the factory for repair.	

No.	Display on LED Keypad	Fault Name	Fault Descriptions
80	boc	V-phase short circuit (Boc)	V-phase short circuit detected when output wiring detection is performed before the drive runs.
Action and Reset			
Action condition		240% of the rated current	
Action time		Immediately act	
Fault treatment parameter		N/A	
Reset method		Manual reset	
Reset condition		Reset in 5 sec. after the fault is cleared.	
Record		Yes	
Cause		Corrective Actions	
Incorrect motor wiring		Check if the motor's internal wiring and the UVW wiring of the drive output terminal are correct.	
Short-circuit at motor output due to poor insulation wiring.		Without considering the short circuits, check the motor cable or replace the cable before turning on the power.	
Check for possible burnout or aging insulation of the motor.		Check the motor insulation value with megger. Replace the motor if the insulation is poor.	
Malfunction caused by interference		Verify the wiring of the control circuit and wiring / grounding of the main circuit to prevent interference.	
The length of motor cable is too long.		Increase the AC motor drive's capacity. Install AC reactor(s) on the output side (U/V/W).	
Hardware failure		The Boc occurs due to short circuit or ground fault at the output side of the drive. Check for possible short circuits between terminals with the electric meter: B1 corresponds to U, V, W; DC- corresponds to U, V, W; ⏚ corresponds to U, V, W. If short circuits occur, return to the factory for repair.	

No.	Display on LED Keypad	Fault Name	Fault Descriptions
81		W-phase short circuit (Coc)	W-phase short circuit detected when output wiring detection is performed before the drive runs.
Action and Reset			
Action condition		240% of the rated current	
Action time		Immediately act	
Fault treatment parameter		N/A	
Reset method		Manual reset	
Reset condition		Reset in 5 sec. after the fault is cleared.	
Record		Yes	
Cause		Corrective Actions	
Incorrect motor wiring		Check if the motor's internal wiring and the UVW wiring of the drive output terminal are correct.	
Short-circuit at motor output due to poor insulation wiring.		Without considering the short circuits, check the motor cable or replace the cable before turning on the power.	
Check for possible burnout or aging insulation of the motor.		Check the motor insulation value with megger. Replace the motor if the insulation is poor.	
Malfunction caused by interference		Verify the wiring of the control circuit and wiring / grounding of the main circuit to prevent interference.	
The length of motor cable is too long.		Increase the AC motor drive's capacity. Install AC reactor(s) on the output side (U/V/W).	
Hardware failure		The Coc occurs due to short circuit or ground fault at the output side of the drive. Check for possible short circuits between terminals with the electric meter: B1 corresponds to U, V, W; DC- corresponds to U, V, W; ⏚ corresponds to U, V, W. If short circuits occur, return to the factory for repair.	

No.	Display on LED Keypad	Fault Name	Fault Descriptions
82	oPL 1	Output phase loss U phase (oPL1)	U phase output phase loss
Action and Reset			
Action condition		Pr.06-47	
Action time		Pr.06-46 Pr.06-48: Use the setting value of Pr.06-48 first. If DC braking function activates, use that of Pr.06-46.	
Fault treatment parameter		Pr.06-45 0: Warn and continue operation 1: Fault and ramp to stop 2: Fault and coast to stop 3: No warning	
Reset method		Manual reset	
Reset condition		Immediately reset	
Record		When Pr.06-45 = 1 or 2, oPL1 is a “Fault”, and the fault is recorded.	
Cause		Corrective Actions	
Unbalanced three-phase impedance of the motor		Replace the motor.	
Check if the wiring is incorrect.		Check the cable and replace it if necessary. Check the motor’s internal wiring. If the fault still exists, replace the motor.	
Check if the motor is a single-phase motor.		Choose a three-phase motor.	
Check if the current sensor is broken.		Check if the control board cable is loose. If yes, reconnect the cable and run the drive to test. If the fault still exists, return to the factory for repair. Check if the three-phase current is balanced with a current clamp meter. If the current is balanced and the oPL1 fault still exists, return to the factory for repair.	
Check if the drive capacity is larger than the motor capacity.		Choose the drive that matches the motor capacity.	

No.	Display on LED Keypad	Fault Name	Fault Descriptions
83	oPL2	Output phase loss V phase (oPL2)	V phase output phase loss
Action and Reset			
Action condition		Pr.06-47	
Action time		Pr.06-46 Pr.06-48: Use the setting value of Pr.06-48 first. If DC braking function activates use that of Pr.06-46.	
Fault treatment parameter		Pr.06-45 0: Warn and continue operation 1: Fault and ramp to stop 2: Fault and coast to stop 3: No warning	
Reset method		Manual reset	
Reset condition		Immediately reset	
Record		When Pr.06-45 = 1 or 2, oPL2 is a “Fault”, and the fault is recorded.	
Cause		Corrective Actions	
Unbalanced three-phase impedance of the motor		Replace the motor.	
Check if the wiring is incorrect.		Check the cable and replace it if necessary. Check the motor’s internal wiring. If the fault still exists, replace the motor.	
Check if the motor is a single-phase motor.		Choose a three-phase motor.	
Check if the current sensor is broken.		Check if the control board cable is loose. If yes, reconnect the cable and run the drive to test. If the fault still exists, return to the factory for repair. Check if the three-phase current is balanced with a current clamp meter. If the current is balanced and the oPL2 fault still exists, return to the factory for repair.	
Check if the drive capacity is larger than the motor capacity.		Choose the drive that matches the motor capacity.	

No.	Display on LED Keypad	Fault Name	Fault Descriptions
84	oPL3	Output phase loss W phase (oPL3)	W phase output phase loss
Action and Reset			
Action condition		Pr.06-47	
Action time		Pr.06-46 Pr.06-48: Use the setting value of Pr.06-48 first. If DC braking function activates, use that of Pr.06-46.	
Fault treatment parameter		Pr.06-45 0: Warn and continue operation 1: Fault and ramp to stop 2: Fault and coast to stop 3: No warning	
Reset method		Manual reset	
Reset condition		Immediately reset	
Record		When Pr.06-45 = 1 or 2, oPL3 is a “Fault”, and the fault is recorded.	
Cause		Corrective Actions	
Unbalanced three-phase impedance of the motor		Replace the motor.	
Check if the wiring is incorrect.		Check the cable and replace it if necessary. Check the motor’s internal wiring. If the fault still exists, replace the motor.	
Check if the motor is a single-phase motor.		Choose a three-phase motor.	
Check if the current sensor is broken.		Check if the control board cable is loose. If yes, reconnect the cable and run the drive to test. If the fault still exists, return to the factory for repair. Check if the three-phase current is balanced with a current clamp meter. If the current is balanced and the oPL3 fault still exists, return to the factory for repair.	
Check if the drive capacity is larger than the motor capacity.		Choose the drive that matches the motor capacity.	

No.	Display on LED Keypad	Fault Name	Fault Descriptions
87	oL3	Overload protection for components inside the motor drive (oL3)	Power components inside the motor drive reach the overload protection level.
Action and Reset			
Action condition		Software detection	
Action time		Immediately act	
Fault treatment parameter		N/A	
Reset method		Manual reset	
Reset condition		Immediately reset	
Record		Yes	
Cause		Corrective Actions	
The power components inside the motor drive are overloaded.		1. Decrease the load of the motor drive. 2. Decrease the carrier frequency (Pr.00-17). 3. Improve the heat dissipation of the distribution box. 4. Increase the acceleration time. 5. Use a motor drive with larger capacity. 6. Decrease the current limit (Pr.06-03, Pr.06-04, Pr.06-12).	

No.	Display on LED Keypad	Fault Name	Fault Descriptions
142	AuE1	Auto-tune error 1 (AUE1)	No feedback current error when motor parameter automatically detects.
Action and Reset			
Action condition		Software detection	
Action time		Immediately act	
Fault treatment parameter		N/A	
Reset method		Manual reset	
Reset condition		Immediately reset	
Record		Yes	
Cause		Corrective Actions	
Motor is not wired.		Wire the motor correctly.	
The electromagnetic contactor is OFF at the output side of the drive (U/V/W).		Verify that the electromagnetic valve is ON.	

No.	Display on LED Keypad	Fault Name	Fault Descriptions
143	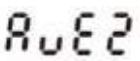	Auto-tune error 2 (AUE2)	Motor phase loss error when motor parameter automatically detects.
Action and Reset			
Action condition		Software detection	
Action time		Immediately act	
Fault treatment parameter		N/A	
Reset method		Manual reset	
Reset condition		Immediately reset	
Record		Yes	
Cause		Corrective Actions	
Incorrect motor wiring		Wire the motor correctly.	
Motor error		Check if the motor works normally.	
The electromagnetic contactor is OFF at the output side of the drive (U/V/W).		Verify that the three-phases of the electromagnetic valve are all ON.	
Motor U/V/W wire error		Check if the wires are broken.	

No.	Display on LED Keypad	Fault Name	Fault Descriptions
149		Total resistance measurement fault (AUE5)	Fault on measuring total resistance
Action and Reset			
Action condition		Software detection	
Action time		Immediately act	
Fault treatment parameter		N/A	
Reset method		Manual reset	
Reset condition		Immediately reset	
Record		Yes	
Cause		Corrective Actions	
Motor error		Check if the motor works normally.	

No.	Display on LED Keypad	Fault Name	Fault Descriptions
150	AuE6	No-load current IO measurement fault (AUE6)	Fault on measuring no-load current IO.
Action and Reset			
Action condition		Software detection	
Action time		Immediately act	
Fault treatment parameter		N/A	
Reset method		Manual reset	
Reset condition		Immediately reset	
Record		Yes	
Cause		Corrective Actions	
Motor error		Check if the motor works normally.	

No.	Display on LED Keypad	Fault Name	Fault Descriptions
151	AuE7	dq axis inductance measurement fault (AUE7)	Fault on measuring dq axis inductance
Action and Reset			
Action condition		Software detection	
Action time		Immediately act	
Fault treatment parameter		N/A	
Reset method		Manual reset	
Reset condition		Immediately reset	
Record		Yes	
Cause		Corrective Actions	
Motor error		Check if the motor works normally.	

No.	Display on LED Keypad	Fault Name	Fault Descriptions
152	AuE8	High frequency injection measurement fault (AUE8)	Fault on measuring high frequency injection
Action and Reset			
Action condition		Software detection	
Action time		Immediately act	
Fault treatment parameter		N/A	
Reset method		Manual reset	
Reset condition		Immediately reset	
Record		Yes	
Cause		Corrective Actions	
Motor error		Check if the motor works normally.	

No.	Display on LED Keypad	Fault Name	Fault Descriptions
157	dEv	Pump PID feedback error (dEv)	Pump PID feedback error
Action and Reset			
Action condition		Feedback value < target value × (1 - Pr.08-13)	
Action time		Pr.08-14	
Fault treatment parameter		Pr.08-62	
Reset method		Self-recovery or manual reset	
Reset condition		Set as Warm: Feedback value ≥ target value (1 - Pr.08-13) automatic recovery Set as Fault: Immediately reset	
Record		Error will be recorded	
Cause		Corrective Actions	
Unreasonable parameter settings		Pr.08-14 Time extension	
Motor error		Check if the motor works normally.	

Chapter 15 Safe Torque Off Function

15-1 Basic Function Description

15-2 Safe Torque Off Terminal Function Description

15-3 Wiring Diagram

15-4 Failure Rate of the Drive Safety Function

15-5 Reset the Parameter Settings

15-6 Timing Diagram Description

15-7 Error Code and Troubleshooting Instructions

15-8 Test and Fault Confirmation

15-1 Basic Function Description

The ME300 series provide a Safe Torque Off (STO) function. The ME300 series use dual-channel S1 and S2 signal inputs to turn off IGBT switching, further preventing the generation of motor torque in order to achieve a safe stop. Refer to Figure 1 for the Safe Torque Off function circuit diagram.

The ME300 Safe Torque Off function meets the following international standards:

ISO 13849-1: 2015 Category 3 PL d

IEC 61508 SIL2

EN 62061 SIL CL 2

EN 60204-1 Category 0

The circuit diagram for the Safe Torque Off function

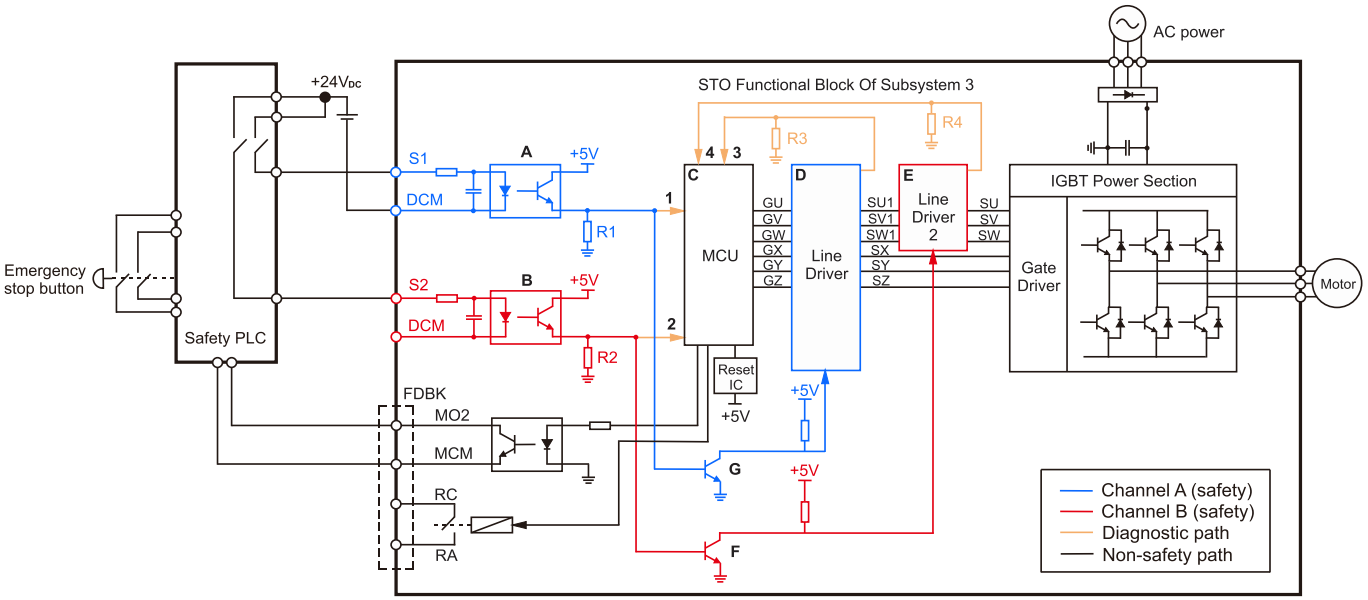

Figure 15-1

15-2 Safe Torque Off Terminal Function Description

The STO (Safe Torque Off) related terminal functions.

Terminals	Terminal Function	Description
+24 V	When the STO function is not used, you can disable the STO function by shorting S1 and S2 with +24 V.	Output voltage range: +24 V ±10% Output voltage capacity: 100 mA
S1	Signal input for STO function channel 1	**S1–DCM / S2–DCM** Rated input voltage: +24 V_{DC} ±10%; maximum input voltage: +30 V_{DC} Rated input current: 6.67 mA ±10% **STO activation mode** Input voltage level: 0 V_{DC} < S1–DCM and S2–DCM < 5 V_{DC} STO response time: ≤ 20 ms (time required for S1 / S2 to operate until the drive stops outputting) **STO cut-off mode** Input voltage level: 11 V_{DC} < S1–DCM and S2–DCM < 30 V_{DC}
S2	Signal input for STO function channel 2	
DCM	Reference ground for S1 and S2 signal	

Table 15-1

The action logic and keypad display after the S1 / S2 signal input.

Signal	Status			
S1–DCM	ON	ON	OFF	OFF
S2–DCM	ON	OFF	ON	OFF
Drive output	Ready to output	STL2 mode (torque output off)	STL1 mode (torque output off)	STO mode (torque output off)
Error displayed on keypad	No error displayed	STL2	STL1	STO

Table 15-2

- STO means channel 1 and 2 operate simultaneously and enter Safe Torque Off.
- STL1 means channel 1 operates.
- STL2 means channel 2 operates.
- STL3 means there is an error detected in the internal loop of channel 1 or channel 2.
- S1–DCM / S2–DCM ON: means S1–DCM / S2–DCM inputs a power supply > 11 V_{DC}.
- S1–DCM / S2–DCM OFF: means S1–DCM / S2–DCM inputs a power supply < 5 V_{DC}.

15-3 Wiring Diagram

15-3-1 Figure 2 shows the internal circuit diagram of the safe control loop.

15-3-2 The terminals of the safe control loop +24V-S1-S2 are short-circuited together with jumper wire at the factory, as shown in Figure 2.

15-3-3 The safe control loop wiring diagram is as follows:

1. Remove the jumper wire from +24V-S1-S2.
2. The wiring is shown in Figure 3 below. Normally, you must close the ESTOP contact switch, so the drive can output without displaying an error.
3. In STO mode, the switch ESTOP is turned on. The drive stops outputting and the keypad displays STO.

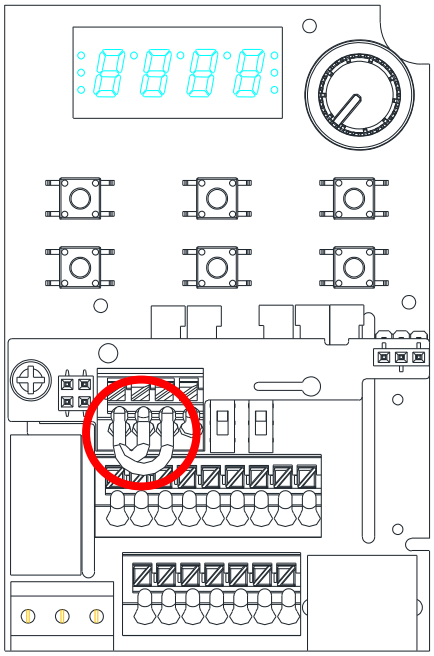

Figure 15-2

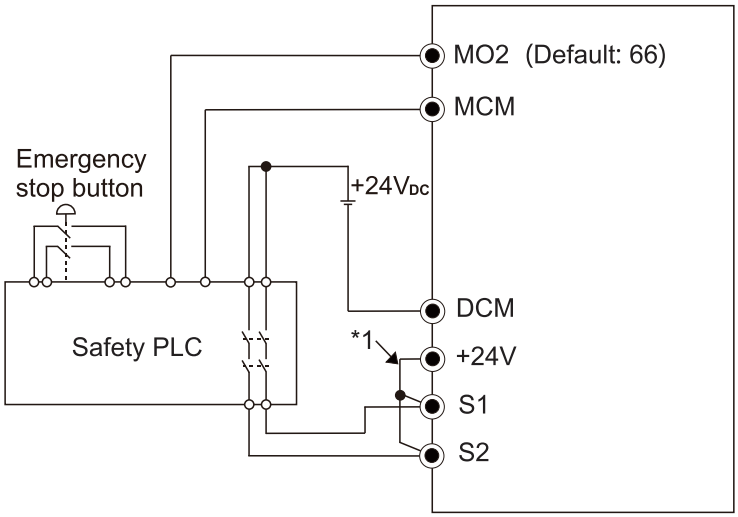

Figure 15-3

NOTE

*1 is factory jumper wire shorting +24V-S1-S2. To use the Safety function, remove this jumper wire. To disable the Safety function, short-circuit +24V-S1-S2 with a jumper wire.

15-4 Failure Rate of the Drive Safety Function

Refer to Table 3 for the relevant safe loop parameters.

Item	Definition	Standard	Performance
SFF	Safe failure fraction	IEC61508	S1–DCM = 88.35% S2–DCM = 88.2%
HFT (Type A subsystem)	Hardware fault tolerance	IEC61508	1
SIL	Safety integrity level	IEC61508	SIL 2
		IEC62061	SILCL 2
PFH	Average frequency of dangerous failure [h-1]	IEC61508	1.36 x 10-9
PFDav	Probability of dangerous failure on demand	IEC61508	5.99 x 10-6
PTI	Proof test interval	IEC61508	1 year
Category	Category	ISO13849-1	Category 3
PL	Performance level	ISO13849-1	d
MTTFd	Mean time to dangerous failure	ISO13849-1	High
DC	Diagnostic coverage	ISO13849-1	Low

Table 15-3

15-5 Reset the Parameter Settings

Use Pr.06-44 to specify the reset method when an STO alarm occurs.

☐ **06-44** STO Latch Selection (only for models built-in with STO function)

Default: 0

Settings 0: STO Latch
1: STO no Latch

- 🕮 Pr.06-44 = 0: STO Alarm Latch. After you clear the cause of the STO Alarm, use a Reset command to clear the STO Alarm.
- 🕮 Pr.06-44 = 1: STO Alarm no Latch. After you clear the cause of the STO Alarm, the STO Alarm clears automatically.
- 🕮 All of the STL1–STL3 errors are “Alarm Latch” mode (in STL1–STL3 mode, the Pr.06-44 function is not effective).

15-6 Timing Diagram Description

The following timing diagrams show the status of relevant signals under different conditions.

15-6-1 Normal operation status

As shown in Figure 4, when S1–DCM and S2–DCM is ON (STO function is not required), the drive executes Operating or Output Stop according to RUN command.

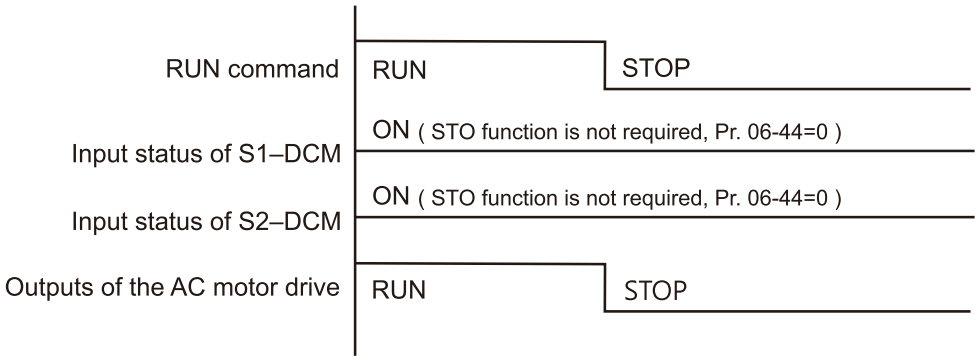

Figure 15-4

15-6-2 STO

15-6-2-1 STO, Pr.06-44 = 0, Pr.02-35 = 0

(external control operation after reset / power on, 0 = not valid)

As shown in Figure 5, when both S1–DCM and S2–DCM are OFF during operation (STO function is required), the drive stops outputting when it enters safe mode regardless of whether the RUN command is in ON or OFF status.

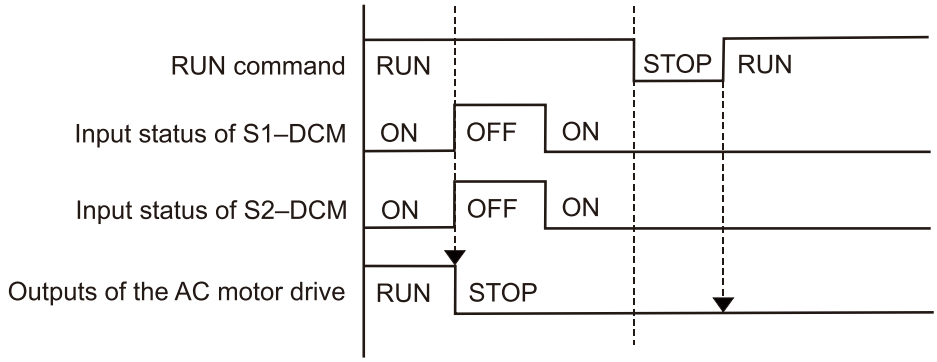

Figure 15-5

15-6-2-2 STO, Pr.06-44 = 0, Pr.02-35 = 1

(external control operation after reset / power on, 1 = the drive executes RUN if the command remains after reset)

As shown in Figure 6, the action is the same as in Figure 5; however, because Pr.02-35 = 1, if the RUN command remains after reset, the drive immediately executes the RUN command again.

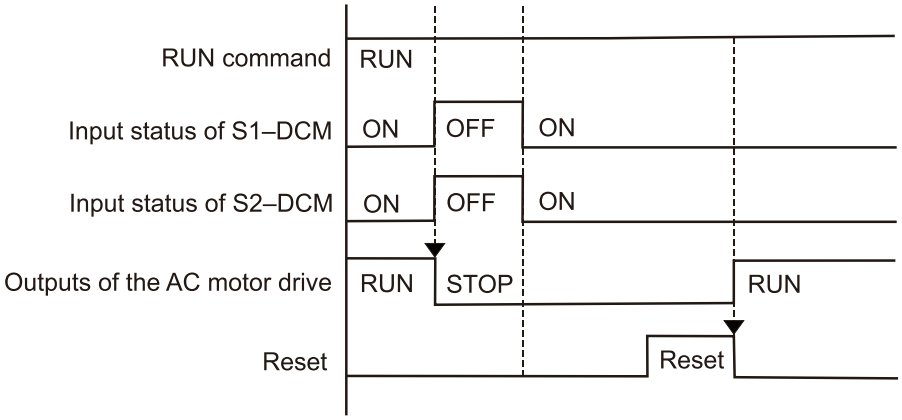

Figure 15-6

15-6-3 STO, Pr.06-44 = 1

As shown in Figure 7, when both of S1–DCM and S2–DCM are OFF during operation (STO function is required), the drive stops outputting. When the S1 / S2 status is restored (ON), the STO alarm clears automatically. The drive outputs when the RUN command is executed again.

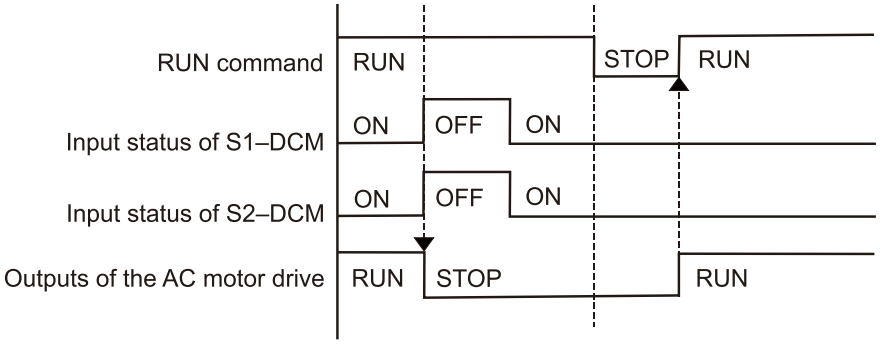

Figure 15-7

15-6-4 STL1, Pr.06-44 = 0 or 1

As shown in Figure 8, when S1–DCM is OFF during operation (STO function is required) and S2–DCM is ON (STO function is not required), the drive stops outputting and the keypad shows the STL1 error. However, you cannot reset the STL1 error even if the S1 status is restored (ON) regardless of the parameter setting. You must cycle the power to reset and to restore the drive to the normal standby state.

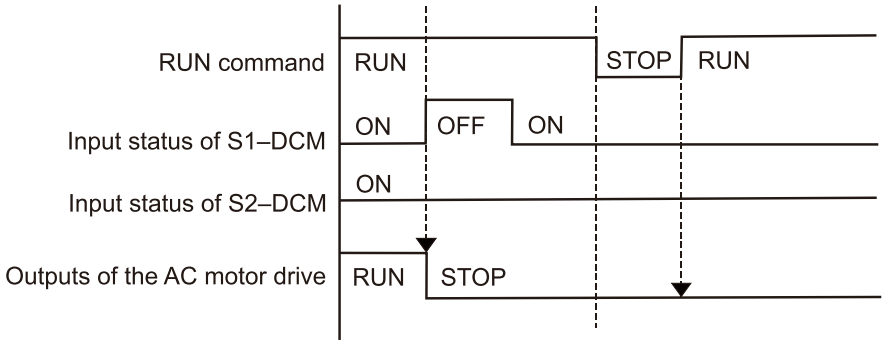

Figure 15-8

15-6-5 STL2, Pr.06-44 = 0 or 1

As shown in Figure 9, when S1–DCM is ON during operation (STO function is not required) and S2–DCM is OFF (STO function is required), the drive stops outputting and the keypad shows the STL2 error. However, you cannot reset the STL2 error even if the S2 status is restored (ON) regardless of the parameter setting. You must cycle the power to reset and to restore the drive to the normal standby state.

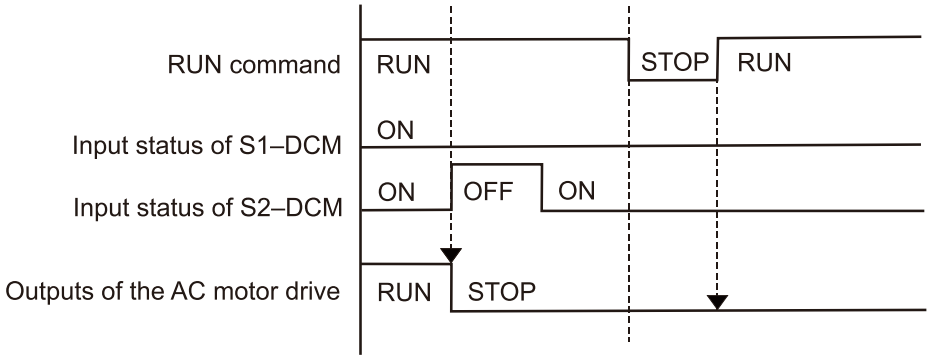

Figure 15-9

15-7 Error Code and Troubleshooting Instructions

15-7-1 Error Code Description

Refer to Pr.06-17–Pr.06-22 for the fault record; the relevant STO error code is 72 / 76 / 77 / 78. The definition is as follows and in Table 4.

06-17	Fault Record 1
06-18	Fault Record 2
06-19	Fault Record 3
06-20	Fault Record 4
06-21	Fault Record 5
06-22	Fault Record 6

Default: 0

Settings 72: S1 internal loop detection error (STL1)
76: STO (STo)
77: S2 internal loop detection error (STL2)
78: S3 internal loop detection error (STL3)

Error code	Name	Description
72 (STL1)	Channel 1 (S1–DCM) safety loop error	S1–DCM internal loop detection error
76 (STO)	Safe Torque Off	Safe Torque Off function active
77 (STL2)	Channel 2 (S2–DCM) safety loop error	S2–DCM internal loop detection error
78 (STL3)	Internal loop error	S1–DCM and S2–DCM internal loop detection error

Table 15-4

15-7-2 Troubleshooting Instructions

Refer to the following instructions for troubleshooting when STO / STL1 / STL2 / STL3 appears on the keypad. Refer to Chapter 14 Error Codes.

No.	Digital keypad Display	Cause	Corrective Actions
72	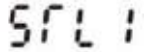	STO jumper cap is not installed or is off.	Install the jumper cap.
		External STO card S1 and +24V short circuit line are not connected.	Check the wiring of the S1 and +24V terminal.
		External STO card is installed incorrectly or pin fractures.	Check if STO card is correctly installed.
		Insufficient external input voltage	Check that the input voltage maintains at least 11V.
		False trigger	Reset the emergency switch (ON: activated) and cycle the power.
		Hardware failure	After you make sure all the wiring is correct, if STL1 fault still exists after cycling the power, please contact Delta.

No.	Digital keypad Display	Cause	Corrective Actions
76	STo	The switch action of S1/+24V and S2/+24V	Check the wiring of the S1 and S2 terminals.
		External STO card is installed incorrectly or pin fractures.	Check if STO card is correctly installed.
		False trigger	Reset the emergency switch (ON: activated) and cycle the power.
		Insufficient external input voltage	Check that the input voltage maintains at least 11V.
		Hardware failure	After you make sure all the wiring is correct, if STO fault still exists after cycling the power, please contact Delta.
77	STL2	STO jumper cap is not installed or is off.	Install the jumper cap.
		External STO card S1 and +24V short circuit line are not connected.	Check the wiring of the S1 and +24V terminals.
		External STO card is installed incorrectly or pin fractures.	Check if STO card is correctly installed.
		Insufficient external input voltage	Check that the input voltage maintains at least 11V.
		False trigger	Reset the emergency switch (ON: activated) and cycle the power.
		Hardware failure	After you make sure all the wiring is correct, if STL2 fault still exists after cycling the power, please contact Delta.
78	STL3	STO jumper cap is not installed or is off.	Install the jumper cap.
		Incorrect wiring of STO card	Check all the wiring of STO card.
		External STO card is installed incorrectly or pin fractures.	Check if STO card is correctly installed.
		False trigger	Reset the emergency switch (ON: activated) and cycle the power.
		Hardware failure	After you make sure all the wiring is correct, if STL3 fault still exists after cycling the power, please contact Delta.

Table 15-5

15-8 Test and Fault Confirmation

After wiring the STO circuit in accordance with Section 15-3 Wiring Diagram, follow the steps below to verify that the STO and related detection functions are working normally.

1. When the drive is powered on, make sure that the S1–DCM and S2–DCM voltage falls between 11–30 V_{DC}. At this time, the drive should enter Standby mode and wait for RUN command. There is no error displayed on the keypad.
2. Press RUN on the keypad and use the emergency button or other method to make the S1–DCM and S2–DCM voltage fall between 0–5 V_{DC}. At the same time, after the output frequency is reached, the drive should enter Torque Stop mode STO and stop outputting voltage. The keypad displays the STO error, and the response time of the S1 and S2 signals to cause the drive to stop outputting voltage should be ≤ 20 ms. Then restore the S1–DCM and S2–DCM voltage to 11–30 V_{DC}, and press RESET on the keypad to clear the STO error. The drive should enter Standby mode and wait for RUN command.
3. Press RUN on the keypad and use the emergency button or other method to make the S1–DCM voltage fall between 0–5 V_{DC}, and the S2–DCM voltage remain between 11–30 V_{DC} after the output frequency is reached. At this time, the drive should enter Torque Stop mode STL1 and stop outputting voltage. The keypad displays the ST1 error, and the response time of S1 signals to cause the drive to stop outputting voltage should be ≤ 20 ms. Then restore the S1–DCM voltage to 11–30 V_{DC}. However, pressing RESET on the keypad cannot clear the STL1 error. You must cycle the power to the drive. Make sure that the S1–DCM and S2–DCM voltage falls between 11–30 V_{DC}, and then cycle the power to the drive, then the STL1 error is cleared. The drive should enter Standby mode and wait for RUN command.
4. Press RUN on the keypad and use the emergency button or other method to make the S2–DCM voltage fall between 0–5 V_{DC}, and the S1–DCM voltage remain between 11–30 V_{DC} after the output frequency is reached. At this time, the drive should enter Torque Stop mode STL2 and stop outputting voltage. The keypad displays the ST2 error, and the response time of S2 signals to cause the drive to stop outputting voltage should be ≤ 20 ms. Then restore the S2–DCM voltage to 11–30 V_{DC}. However, pressing RESET on the keypad cannot clear the STL2 error. You must cycle the power to the drive. Make sure that the S1–DCM and S2–DCM voltage falls between 11–30 V_{DC}, and then cycle the power to the drive, then the STL2 error is cleared. The drive should enter Standby mode and wait for RUN command.
5. If you can conduct these four steps normally in sequence with no other error, then the Safe Torque Off function loop is normal, as shown in Table 6 below. However, if a situation that differs from these four steps, or if STL3 occurs, then the Safe Torque Off function loop is not working normally. Please refer to Section 15-7 Error Code and Troubleshooting Instructions.

Signal	Status			
S1–DCM	ON	ON	OFF	OFF
S2–DCM	ON	OFF	ON	OFF
Drive output	Ready to output	STL2 mode (torque output off)	STL1 mode (torque output off)	STO mode (torque output off)
Error displayed on keypad	No error displayed	STL2	STL1	STO
Response time	N/A	≤ 20 ms		
RESET mechanism	N/A	Cycle power to the drive	Cycle power to the drive	Press RESET directly

Table 15-6

- STO means channel 1 and 2 operate simultaneously and enter Safe Torque Off.
- STL1 means channel 1 operates.
- STL2 means channel 2 operates.
- STL3 means there is an error detected in the internal loop of channel 1 or channel 2.
- S1–DCM / S2–DCM ON: means S1–DCM / S2–DCM inputs a power supply > 11 V_{DC}.
- S1–DCM / S2–DCM OFF: means S1–DCM / S2–DCM inputs a power supply < 5 V_{DC}.