Smarter. Greener. Together.

Industrial Automation Headquarters

Delta Electronics, Inc.
Taoyuan Technology Center
No.18, Xinglong Rd., Taoyuan District,
Taoyuan City 33068, Taiwan
TEL: 886-3-362-6301 / FAX: 886-3-371-6301

Asia

Delta Electronics (Shanghai) Co., Ltd.
No.182 Minyu Rd., Pudong Shanghai, P.R.C.
Post code : 201209
TEL: 86-21-6872-3988 / FAX: 86-21-6872-3996
Customer Service: 400-820-9595

Delta Electronics (Japan), Inc.
7RN\R2□FH
Industrial Automation Sales Department
2-1-14 Shibadaimon, Minato-ku
Tokyo, Japan 105-0012
TEL: 81-3-5733-1155 / FAX: 81-3-5733-1255

Delta Electronics (Korea), Inc.
6HRXO2□FH
1511, 219, Gasan Digital 1-Ro., Geumcheon-gu,
Seoul, 08501 South Korea
TEL: 82-2-515-5305 / FAX: 82-2-515-5302

Delta Energy Systems (Singapore) Pte Ltd.
4 Kaki Bukit Avenue 1, #05-04, Singapore 417939
TEL: 65-6747-5155 / FAX: 65-6744-9228

Delta Electronics (India) Pvt. Ltd.
Plot No.43, Sector 35, HSIIDC Gurgaon,
PIN 122001, Haryana, India
TEL: 91-124-4874900 / FAX : 91-124-4874945

Delta Electronics (Thailand) PCL.
909 Soi 9, Moo 4, Bangpoo Industrial Estate (E.P.Z),
Pattana 1 Rd., T.Phraksa, A.Muang,
Samutprakarn 10280, Thailand
TEL: 66-2709-2800 / FAX : 662-709-2827

Delta Electronics (Australia) Pty Ltd.
Unit 20-21/45 Normanby Rd., Notting Hill Vic 3168, Australia
TEL: 61-3-9543-3720

Americas

Delta Electronics (Americas) Ltd.
5DOHLJK2□FH
P.O. Box 12173, 5101 Davis Drive,
Research Triangle Park, NC 27709, U.S.A.
TEL: 1-919-767-3813 / FAX: 1-919-767-3969

Delta Electronics Brazil
6mR3DXOR6DOHV2□FH
5XD,WDSHYD□DQGDU(GL¿FLR,WDSHYD
One - Bela Vista 01332-000 - São Paulo - SP - Brazil
TEL: 55-12-3932-2300 / FAX: 55-12-3932-237

Delta Electronics International Mexico S.A. de C.V.
0H[LFR2□FH
*XVWDYR%D]1R(GL¿FLR(3%
Colonia La Loma, CP 54060
Tlalnepantla, Estado de México
TEL: 52-55-3603-9200

EMEA

Headquarters: Delta Electronics (Netherlands) B.V.
Sales: Sales.IA.EMEA@deltaww.com
Marketing: Marketing.IA.EMEA@deltaww.com
Technical Support: iatechnicalsupport@deltaww.com
Customer Support: Customer-Support@deltaww.com
Service: Service.IA.emea@deltaww.com
TEL: 31(0)40 800 3900

BENELUX: Delta Electronics (Netherlands) B.V.
De Witbogt 20, 5652 AG Eindhoven, The Netherlands
Mail: Sales.IA.Benelux@deltaww.com
TEL: 31(0)40 800 3900

DACH: Delta Electronics (Netherlands) B.V.
Coesterweg 45, D-59494 Soest, Germany
Mail: Sales.IA.DACH@deltaww.com
TEL: 49(0)2921 987 0

France: Delta Electronics (France) S.A.
ZI du bois Challand 2, 15 rue des Pyrénées,
Lisses, 91090 Evry Cedex, France
Mail: Sales.IA.FR@deltaww.com
TEL: 33(0)1 69 77 82 60

Iberia: Delta Electronics Solutions (Spain) S.L.U
Ctra. De Villaverde a Vallecas, 265 1º Dcha Ed.
Hormigueras – P.I. de Vallecas 28031 Madrid
TEL: 34(0)91 223 74 20

Carrer Llacuna 166, 08018 Barcelona, Spain
Mail: Sales.IA.Iberia@deltaww.com

Italy: Delta Electronics (Italy) S.r.l.
Via Meda 2–22060 Novedrate(CO)
Piazza Grazioli 18 00186 Roma Italy
Mail: Sales.IA.Italy@deltaww.com
TEL: 39 039 8900365

Russia: Delta Energy System LLC
9HUH\VND\D3OD]D,,R□FH9HUH\VND\DVWU
17 121357 Moscow Russia
Mail: Sales.IA.RU@deltaww.com
TEL: 7 495 644 3240

Turkey: Delta Greentech Elektronik San. Ltd. Sti. (Turkey)
ùHULIDOL0DK+HQGHP&DG.XOH6RN1R$
hPUDQL\H±øVWDQEXO
Mail: Sales.IA.Turkey@deltaww.com
TEL: 90 216 499 9910

GCC: Delta Energy Systems AG (Dubai BR)
P.O. Box 185668, Gate 7, 3rd Floor, Hamarain Centre
Dubai, United Arab Emirates
Mail: Sales.IA.MEA@deltaww.com
TEL: 971(0)4 2690148

Egypt + North Africa: Delta Electronics
Unit 318, 3rd Floor, Trivium Business Complex, North 90 street,
New Cairo, Cairo, Egypt
Mail: Sales.IA.MEA@deltaww.com

*We reserve the right to change the information in this PDQXD@ithout prior notice.

'(/7$B,$0'6B&3OXVB80B(1B

Delta High Performance Vector Control Drive - C2000 Plus Series User Manual

Delta High Performance Vector Control Drive C2000 Plus Series User Manual

Smarter. Greener. Together.

Introduction

Nameplate Information

Model Name

Serial Number

Apply After Service by Mobile Device

RFI Jumper

Dimensions

Summary of Parameter

Receiving and Inspection

After receiving the AC motor drive, please check for the following:

1. Inspect the unit after unpacking to ensure that it was not damaged during shipment. Make sure that the part number printed on the package matches the part number indicated on the nameplate.
2. Make sure that the mains voltage is within the range indicated on the nameplate. Install the AC motor drive according to the instructions in this manual.
3. Before applying power, make sure that all devices, including mains power, motor, control board and digital keypad, are connected correctly.
4. When wiring the AC motor drive, make sure that the wiring of input terminals “R/L1, S/L2, T/L3” and output terminals “U/T1, V/T2, W/T3” are correct to prevent damage to the drive.
5. When power is applied, use the digital keypad (KPC-CC01) to select the language and set parameters. When executing a trial run, begin with a low speed and then gradually increases the speed to the desired speed.

1-1 Nameplate Information

230V / 460V Model

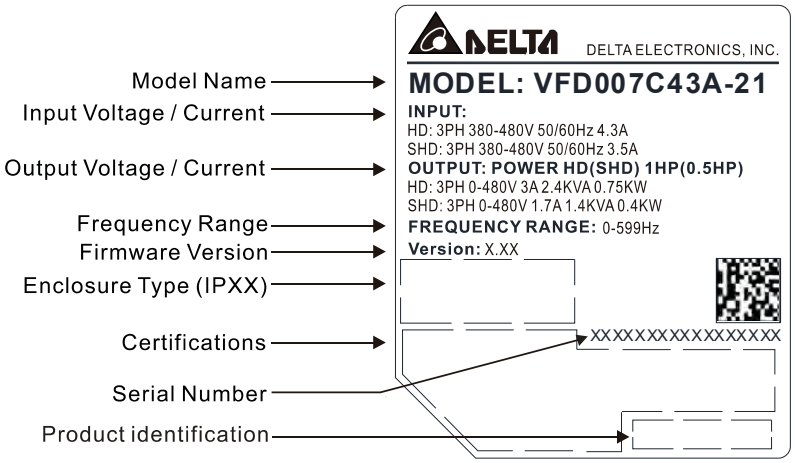

Figure 1-1

575V / 690V Model

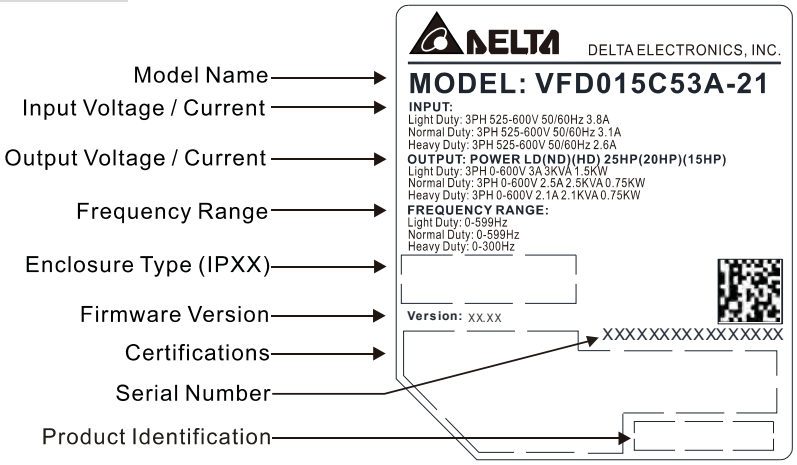

Figure 1-2

1-2 Model Name

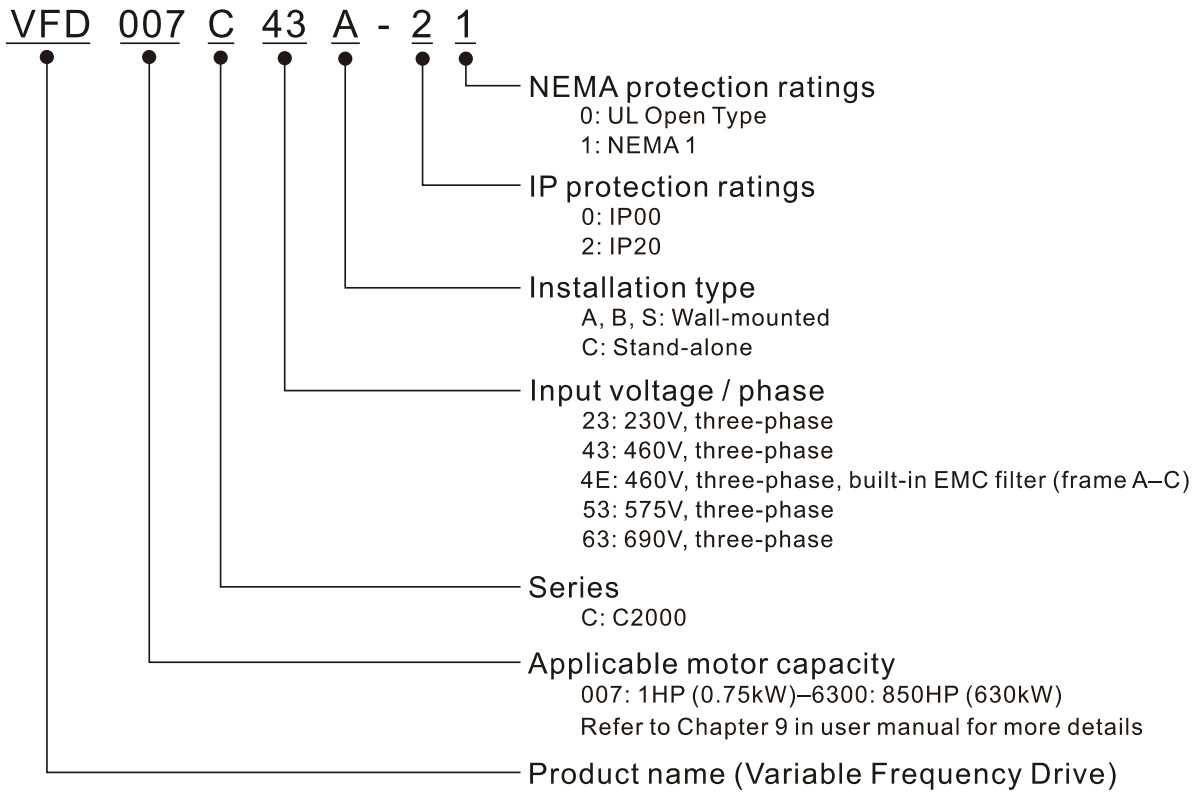

1-3 Serial Number

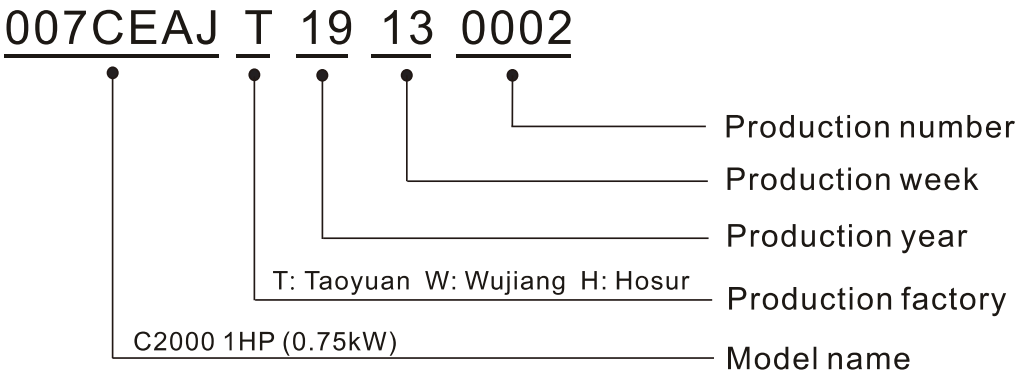

1-4 Apply After Service by Mobile Device

1-4-1 Location of Service Link Label

Frame A–H

Service link label (Service Label) will be pasted on the upper-right corner of the side where keypad is installed on the case body, as below drawing shown:

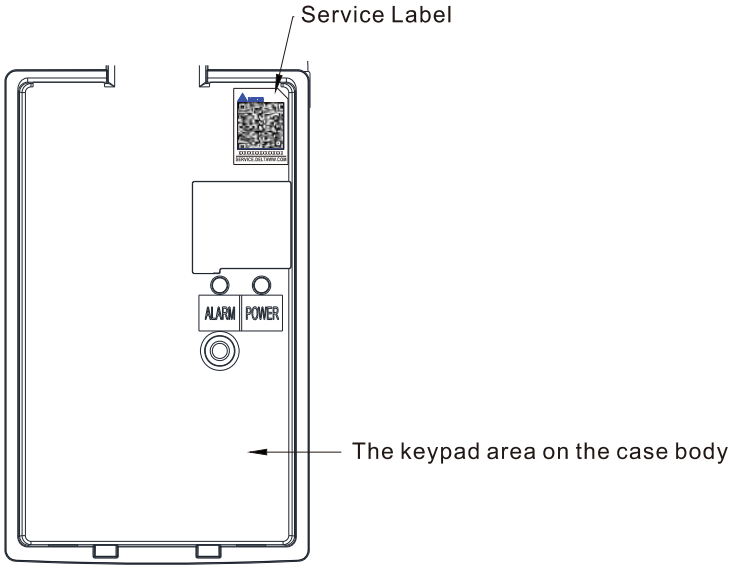

Figure 1-3

1-4-2 Service Link Label

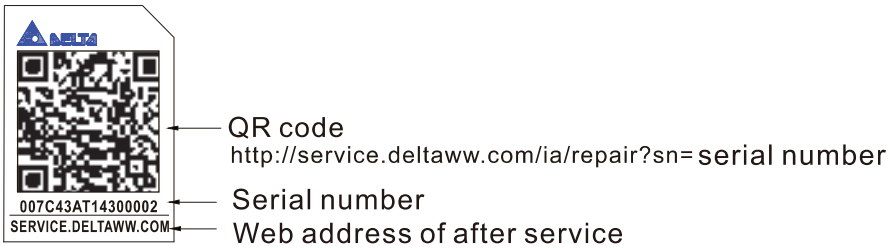

Figure 1-4

Scan QR Code to apply

1. Find out the QR code sticker (as above shown).
2. Using a Smartphone to run a QR Code reader APP.
3. Point your camera to the QR Code. Hold your camera steady so that the QR code comes into focus.
4. Access the Delta after Service website.
5. Fill your information into the column marked with an orange star.
6. Enter the CAPTCHA and click “Submit” to complete the application.

Cannot find out the QR Code?

1. Open a web browser on your computer or smart phone.
2. Key in https://service.deltaww.com/ia/repair in address bar and press enter
3. Fill your information into the columns marked with an orange star.
4. Enter the CAPTCHA and click “Submit” to complete the application.

1-5 RFI Jumper

(1) The drive contains Varistors / MOVs that are connected from phase to phase and from phase to ground to prevent the drive from unexpected stop or damage caused by mains surges or voltage spikes. Because the Varistors / MOVs from phase to ground are connected to ground with the RFI jumper, removing the RFI jumper disables the protection.

(2) In models with a built-in EMC filter, the RFI jumper connects the filer capacitors to ground to form a return path for high frequency noise in order to isolate the noise from contaminating the mains power. Removing the RFI jumper strongly reduces the effect of the built-in EMC filter. Although a single drive complies with the international standards for leakage current, an installation with several drives with built-in EMC filters can trigger the RCD. Removing the RFI jumper helps, but the EMC performance of each drive is no longer guaranteed.

Frame A–C Screw Torque: 8–10 kg-cm / [6.9–8.7 lb-in.] / [0.8–1.0 Nm]

Loosen the screws and remove the RFI jumper (as shown below).
Tighten the screws again after you remove the RFI jumper.

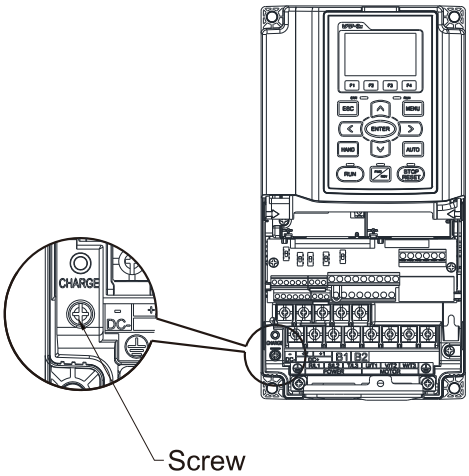

Figure 1-5

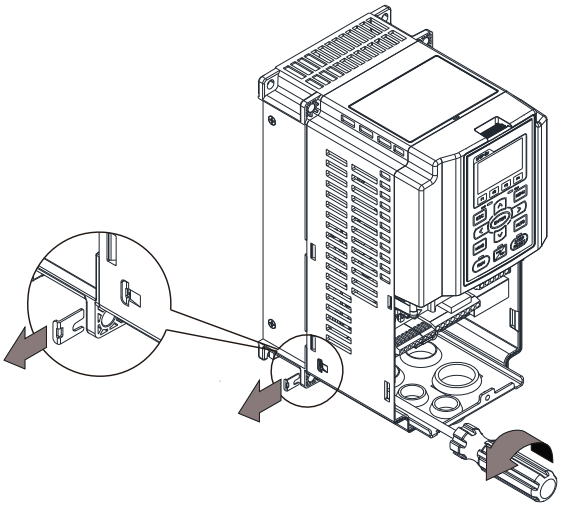

Figure 1-6

Frame D0–H

Remove the RFI jumper by hands, no screws need to be loosen.

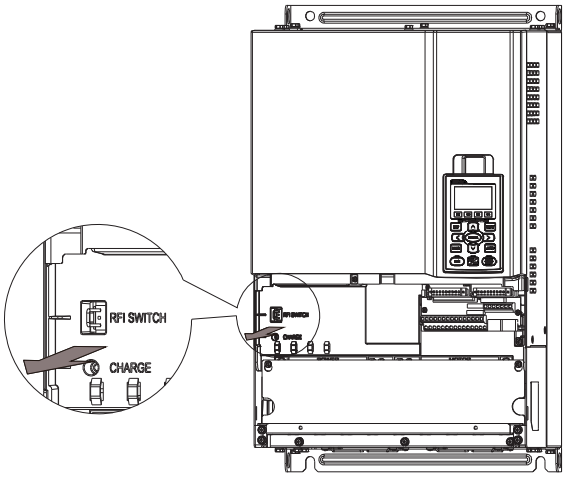

Figure 1-7

Isolating main power from ground:

When the power distribution system of the drive is a floating ground system (IT Systems) or an asymmetric ground system (Corner Grounded TN Systems), you must remove the RFI jumper. Removing the RFI jumper disconnects the internal capacitors from ground to avoid damaging the internal circuits and to reduce the ground leakage current.

Important points regarding ground connection

- ☑ To ensure the safety of personnel, proper operation, and to reduce electromagnetic radiation, you must properly ground the motor and drive during installation.
- ☑ The diameter of the grounding cables must comply with the local safety regulations.
- ☑ You must connect the shielded cable to the motor drive's ground to meet safety regulations.
- ☑ Only use the shielded cable as the ground for equipment when the aforementioned points are met.
- ☑ When installing multiple drives, do not connect the grounds of the drives in series but connect each drive to ground. The following pictures show the correct and wrong ways to connect the grounds.

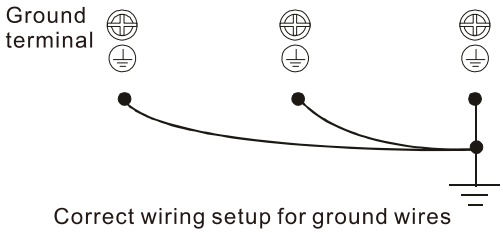

Figure 1-8

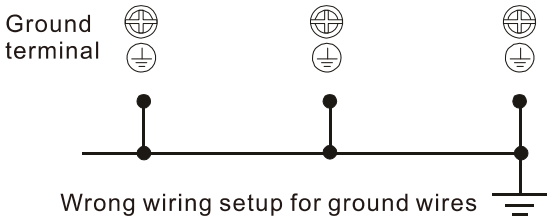

Figure 1-9

Pay particular attention to the following points:

- ☑ Do not remove the RFI jumper while the power is ON.
- ☑ Removing the RFI jumper also cuts the capacitor conductivity of the surge absorber to ground and the built-in EMC filter capacitors. Compliance with the EMC specifications is no longer guaranteed.
- ☑ Do not remove the RFI jumper if the mains power is a symmetrical grounded power system in order to maintain the efficiency for EMC circuit.
- ☑ Remove the RFI jumper when conducting high voltage tests. When conducting a high voltage test to the entire facility, disconnect the mains power and the motor if the leakage current is too high.

Floating Ground System (IT Systems)

A floating ground system is also called IT system, ungrounded system, or high impedance / resistance (greater than 30Ω) grounding system.

- ☑ Remove the RFI jumper to disconnect the ground cable from the internal filter capacitor and surge absorber.
- ☑ In situations where EMC is required, check for excess electromagnetic radiation affecting nearby low-voltage circuits. In some situations, the adapter and cable naturally provide enough suppression. If in doubt, install an extra electrostatic shielded cable on the power supply side between the main circuit and the control terminals to increase shielding.
- ☑ Do not install an external RFI / EMC filter. The external EMC filter passes through a filter capacitor and connects power input to the ground. This is very dangerous and damages the motor drive.

Asymmetric Ground System (Corner Grounded TN Systems)

Caution: Do not remove the RFI jumper while the input terminal of the drive is ON.

In the following four situations, the RFI jumper must be removed. This is to prevent the system from grounding through the RFI and filter capacitor and damaging the drive.

<table>
<tr><th colspan="2">You must remove the RFI jumper for an asymmetric ground system</th></tr>
<tr><td>1. Grounding at a corner in a triangle configuration
 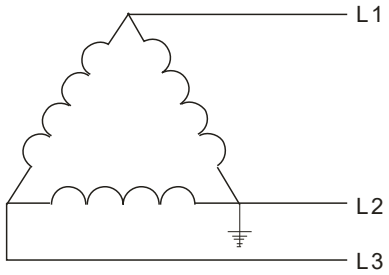

Figure 1-10</td><td>2. Grounding at a midpoint in a polygonal configuration
 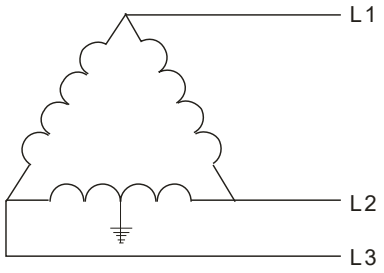

Figure 1-11</td></tr>
<tr><td>3. Grounding at one end in a single-phase configuration
 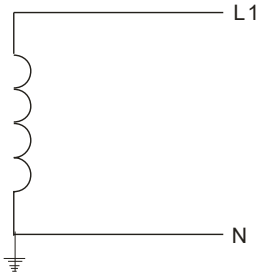

Figure 1-12</td><td>4. No stable neutral grounding in a three-phase autotransformer configuration
 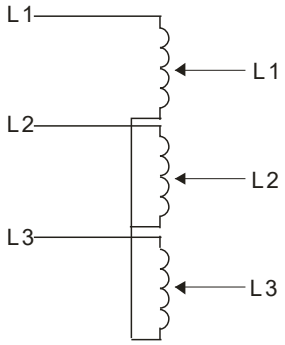

Figure 1-13</td></tr>
<tr><th colspan="2">You can use the RFI jumper for a symmetrical grounding power system</th></tr>
<tr><td>In a situation with a symmetrical grounding power system, you can use the RFI jumper to maintain the effect of the built-in EMC filter and surge absorber. For example, the diagram on the right is a symmetrical grounding power system.</td><td> 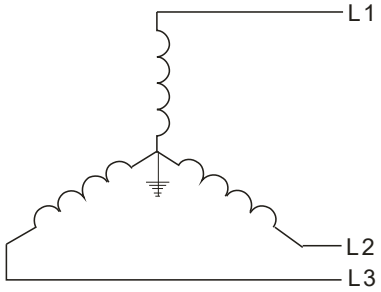

Figure 1-14</td></tr>
</table>

1-6 Dimensions

Frame A

VFD007C23A-21; VFD007C43A-21; VFD007C4EA-21; VFD015C23A-21; VFD015C43A-21; VFD015C4EA-21; VFD015C53A-21; VFD022C23A-21; VFD022C43A-21; VFD022C4EA-21; VFD022C53A-21; VFD037C23A-21; VFD037C43A-21; VFD037C4EA-21; VFD037C53A-21; VFD040C43A-21; VFD040C4EA-21; VFD055C43A-21; VFD055C4EA-21

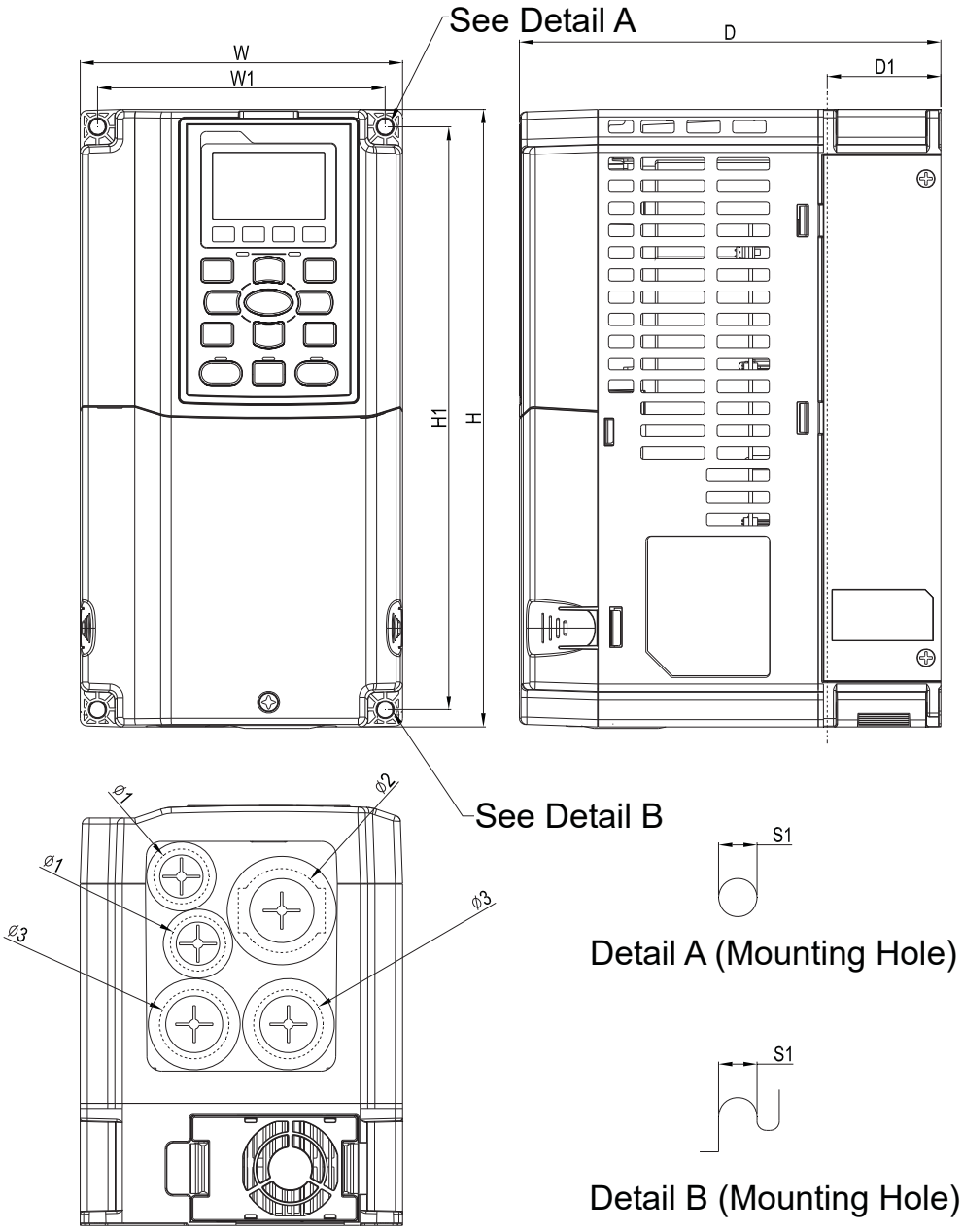

Figure 1-15

Unit: mm [inch]

Frame	W	H	D	W1	H1	D1*	S1	Φ1	Φ2	Φ3
A1	130.0 [5.12]	250.0 [9.84]	170.0 [6.69]	116.0 [4.57]	236.0 [9.29]	45.8 [1.80]	6.2 [0.24]	22.2 [0.87]	34.0 [1.34]	28.0 [1.10]

D1*: Flange mounting

Frame B

VFD055C23A-21; VFD055C53A-21; VFD075C23A-21; VFD075C43A-21; VFD075C4EA-21; VFD075C53A-21; VFD110C23A-21; VFD110C43A-21; VFD110C4EA-21; VFD110C53A-21; VFD150C43A-21; VFD150C4EA-21; VFD150C53A-21

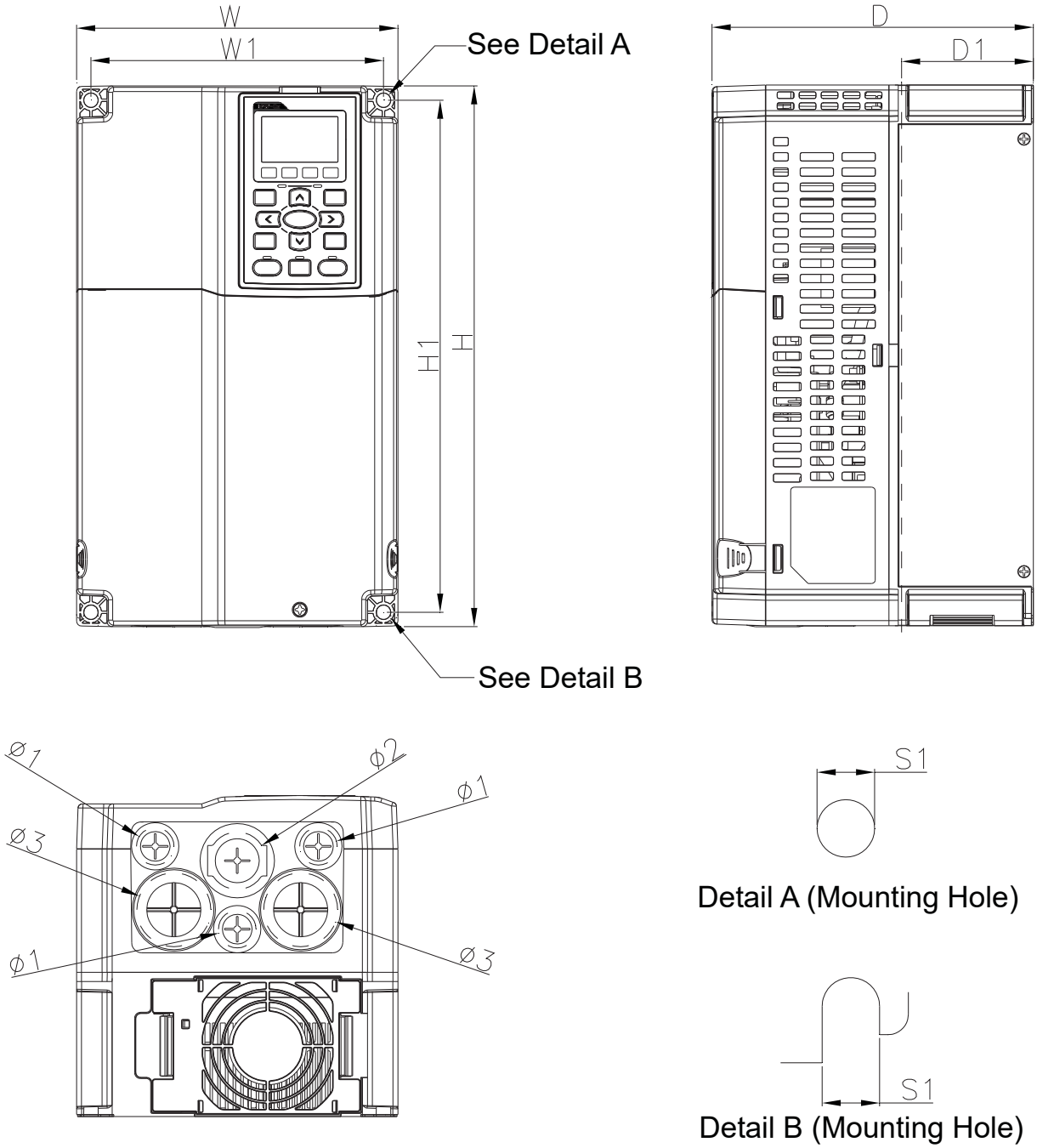

Figure 1-16

Unit: mm [inch]

Frame	W	H	D	W1	H1	D1*	S1	Φ1	Φ2	Φ3
B1	190.0 [7.48]	320.0 [12.60]	190.0 [7.48]	173.0 [6.81]	303.0 [11.93]	77.9 [3.07]	8.5 [0.33]	22.2 [0.87]	34.0 [1.34]	43.8 [1.72]

D1*: Flange mounting

Frame C

VFD150C23A-21; VFD185C23A-21; VFD185C43A-21; VFD185C4EA-21; VFD185C63B-21; VFD220C23A-21; VFD220C43A-21; VFD220C4EA-21; VFD220C63B-21; VFD300C43A-21; VFD300C4EA-21; VFD300C63B-21; VFD370C63B-21

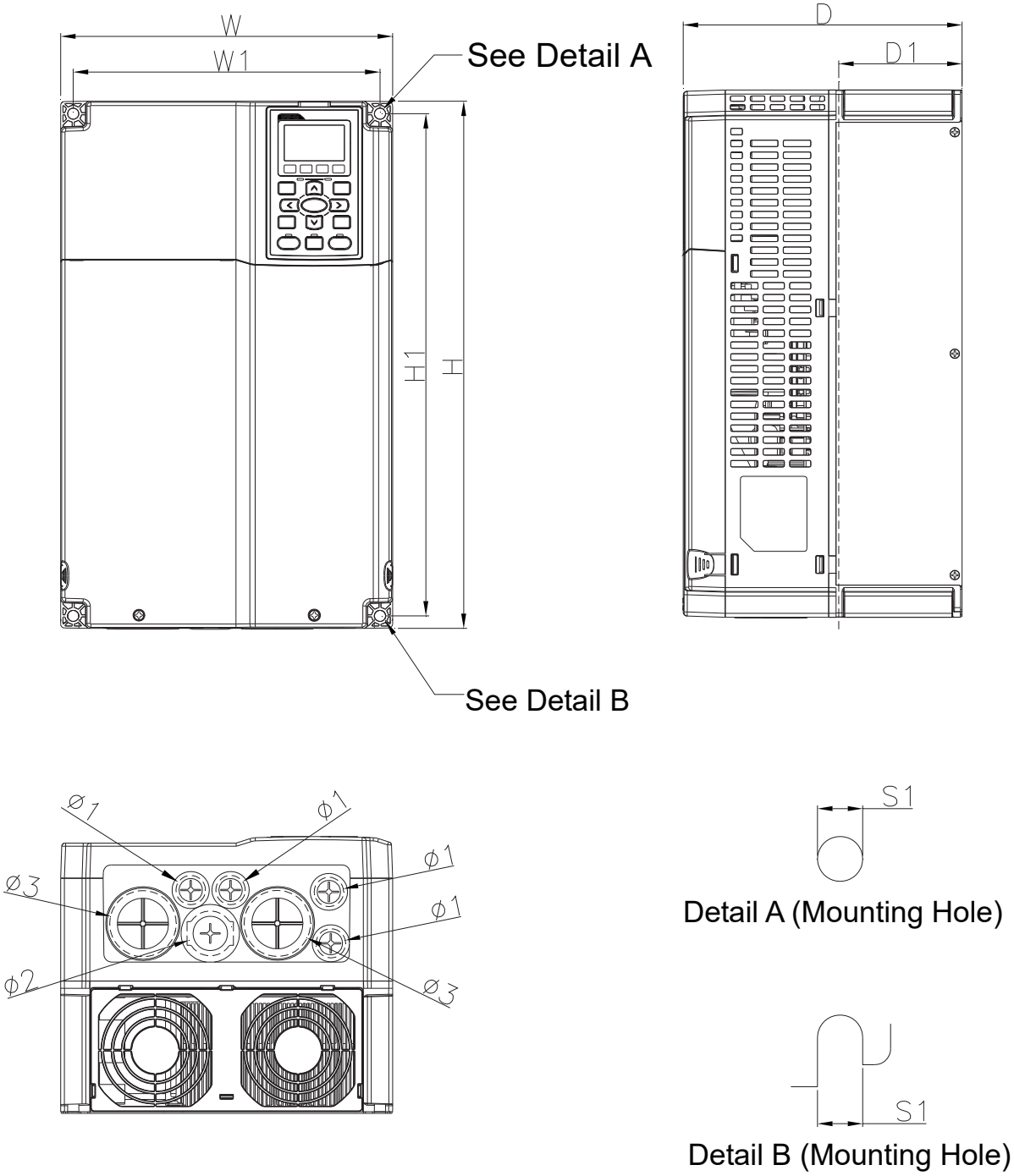

Figure 1-17

Unit: mm [inch]

Frame	W	H	D	W1	H1	D1*	S1	Φ1	Φ2	Φ3
C1	250.0 [9.84]	400.0 [15.75]	210.0 [8.27]	231.0 [9.09]	381.0 [15.00]	92.9 [3.66]	8.5 [0.33]	22.2 [0.87]	34.0 [1.34]	50.0 [1.97]

D1*: Flange mounting

Frame D0

D0-1: VFD370C43S-00; VFD450C43S-00

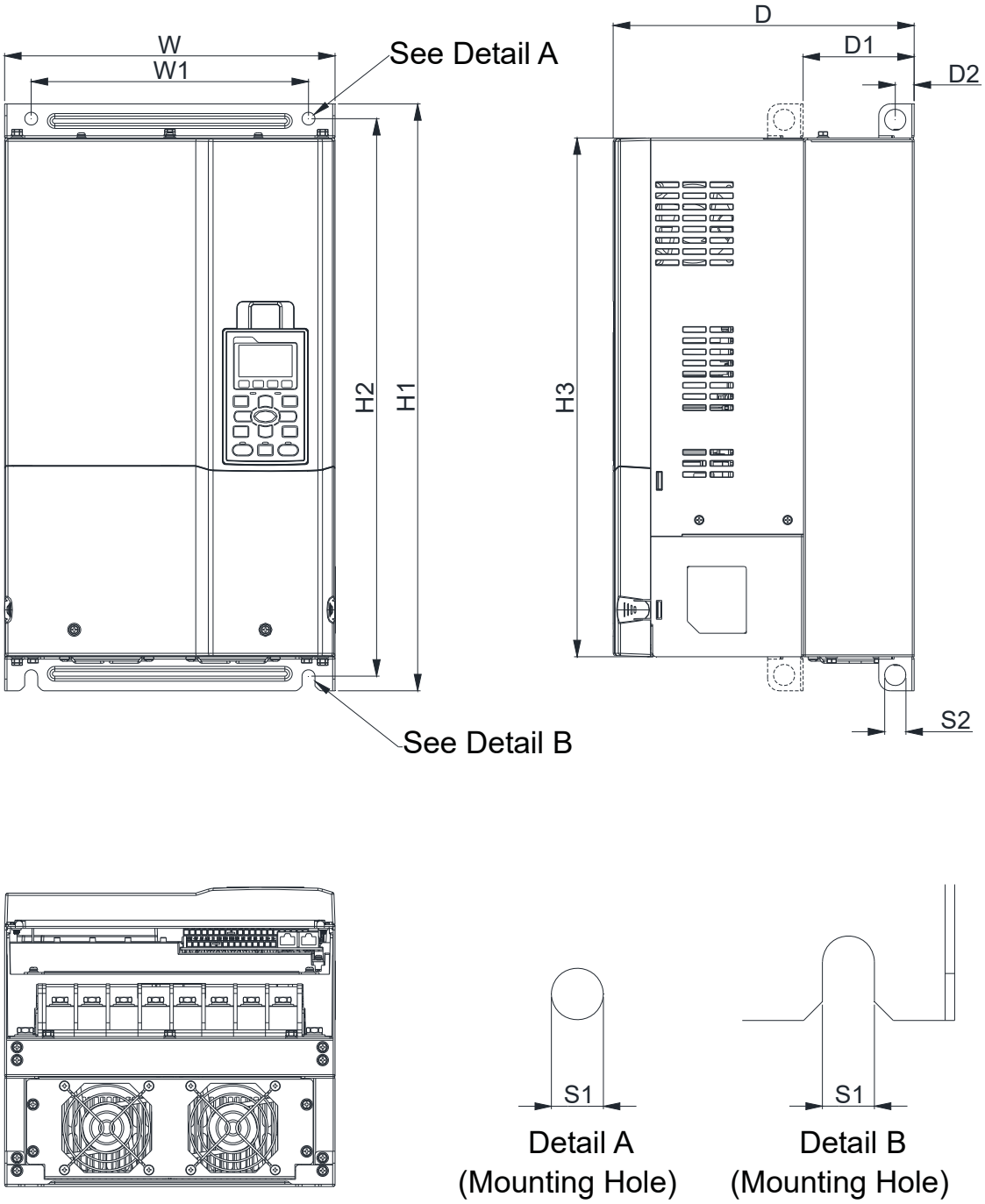

Figure 1-18

Unit: mm [inch]

Frame	W	H1	D	W1	H2	H3	D1*	D2	S1	S2
D0-1	280.0 [11.02]	500.0 [19.69]	255.0 [10.04]	235.0 [9.25]	475.0 [18.70]	442.0 [17.40]	94.2 [3.71]	16.0 [0.63]	11.0 [0.43]	18.0 [0.71]

D1*: Flange mounting

Frame D0

D0-2: VFD370C43S-21; VFD450C43S-21

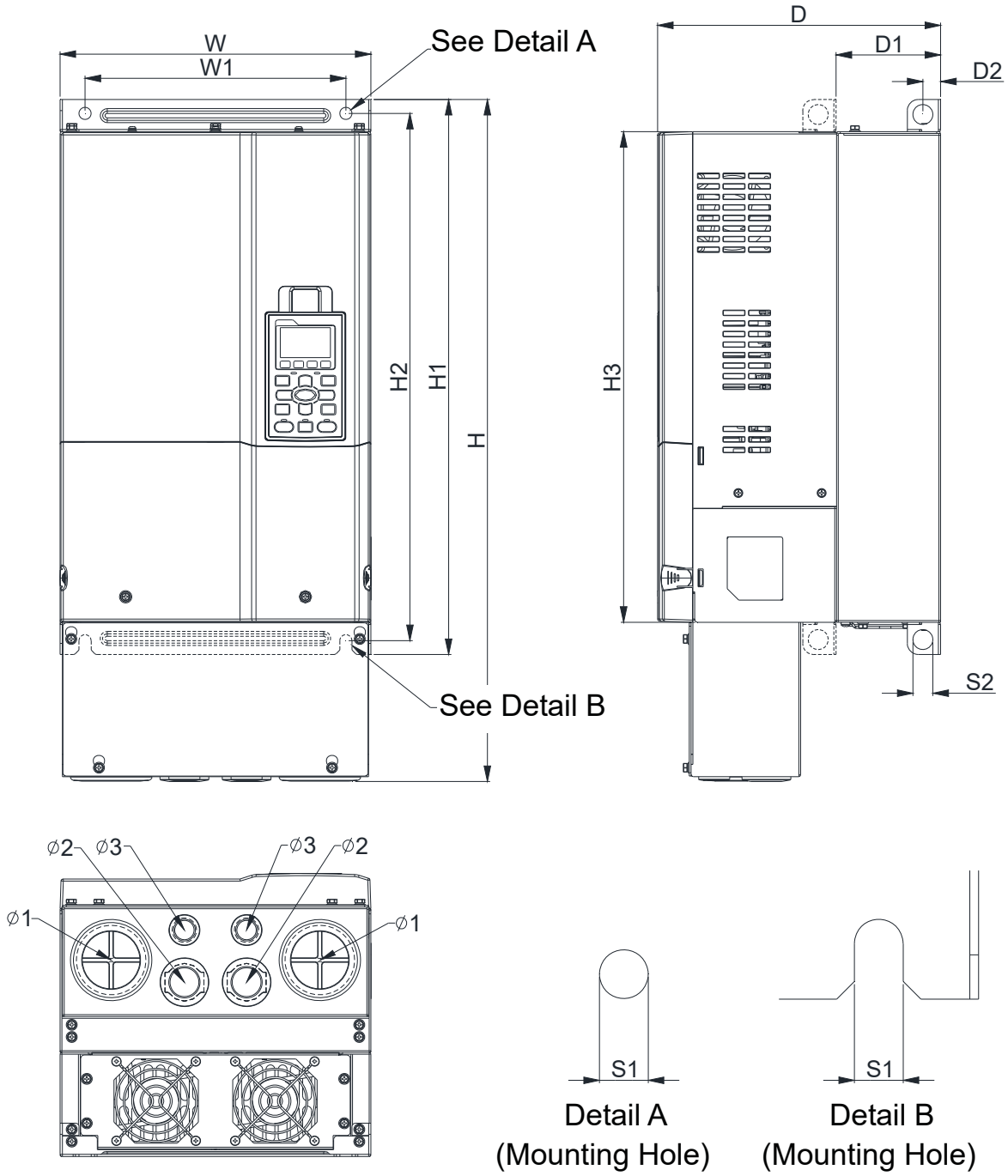

Figure 1-19

Unit: mm [inch]

Frame	W	H	D	W1	H1	H2	H3	D1*	D2	S1	S2	Φ1	Φ2	Φ3
D0-2	280.0 [11.02]	614.4 [24.19]	255.0 [10.04]	235.0 [9.25]	500.0 [19.69]	475.0 [18.70]	442.0 [17.40]	94.2 [3.71]	16.0 [0.63]	11.0 [0.43]	18.0 [0.71]	62.7 [2.47]	34.0 [1.34]	22.0 [0.87]

D1*: Flange mounting

Frame D

D1: VFD300C23A-00; VFD370C23A-00; VFD450C63B-00; VFD550C43A-00; VFD550C63B-00; VFD750C43A-00

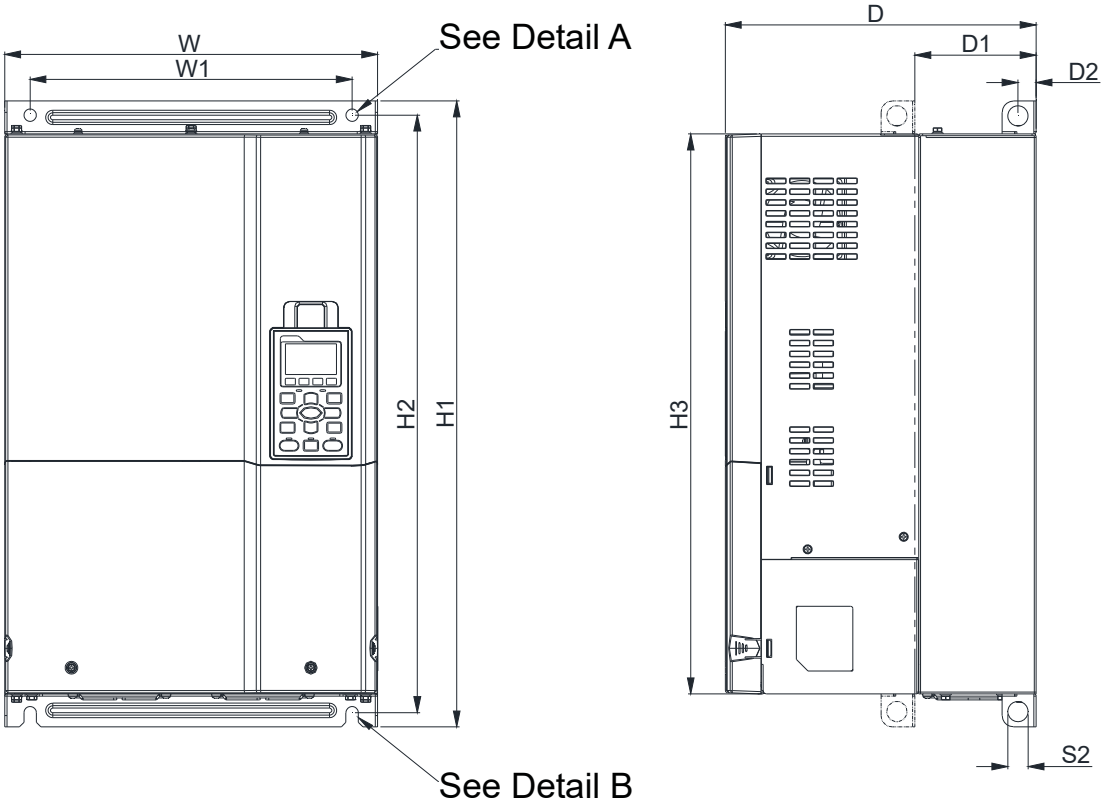

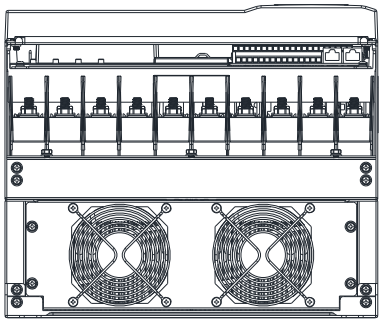

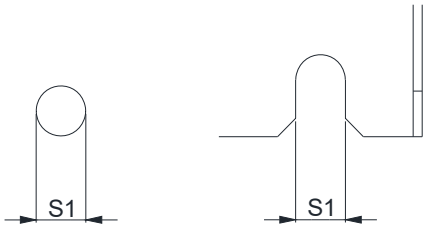

Detail A (Mounting Hole)

Detail B (Mounting Hole)

Figure 1-20

Unit: mm [inch]

Frame	W	H	D	W1	H1	H2	H3	D1*	D2	S1	S2	Φ1	Φ2	Φ3
D1	330.0 [12.99]	-	275.0 [10.83]	285.0 [11.22]	550.0 [21.65]	525.0 [20.67]	492.0 [19.37]	107.2 [4.22]	16.0 [0.63]	11.0 [0.43]	18.0 [0.71]	-	-	-

D1*: Flange mounting

Frame D

D2: VFD300C23A-21; VFD370C23A-21; VFD450C63B-21; VFD550C43A-21; VFD550C63B-21; VFD750C43A-21

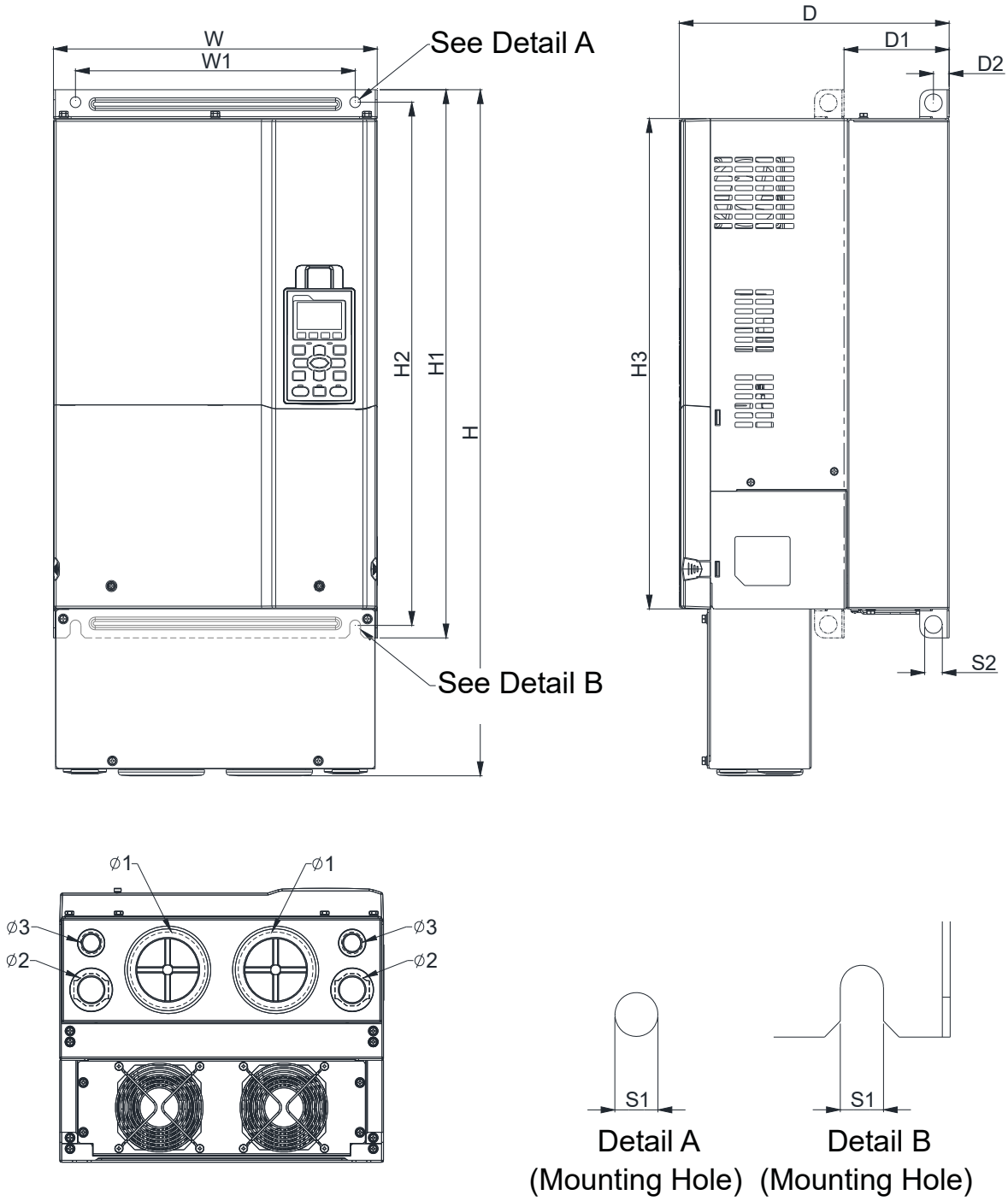

Figure 1-21

Unit: mm [inch]

Frame	W	H	D	W1	H1	H2	H3	D1*	D2	S1	S2	Φ1	Φ2	Φ3
D2	330.0 [12.99]	688.3 [27.10]	275.0 [10.83]	285.0 [11.22]	550.0 [21.65]	525.0 [20.67]	492.0 [19.37]	107.2 [4.22]	16.0 [0.63]	11.0 [0.43]	18.0 [0.71]	76.2 [3.00]	34.0 [1.34]	22.0 [0.87]

D1*: Flange mounting

Frame E

E1: VFD450C23A-00; VFD550C23A-00; VFD750C23A-00; VFD750C63B-00; VFD900C43A-00; VFD900C63B-00; VFD1100C43A-00; VFD1100C63B-00; VFD1320C63B-00

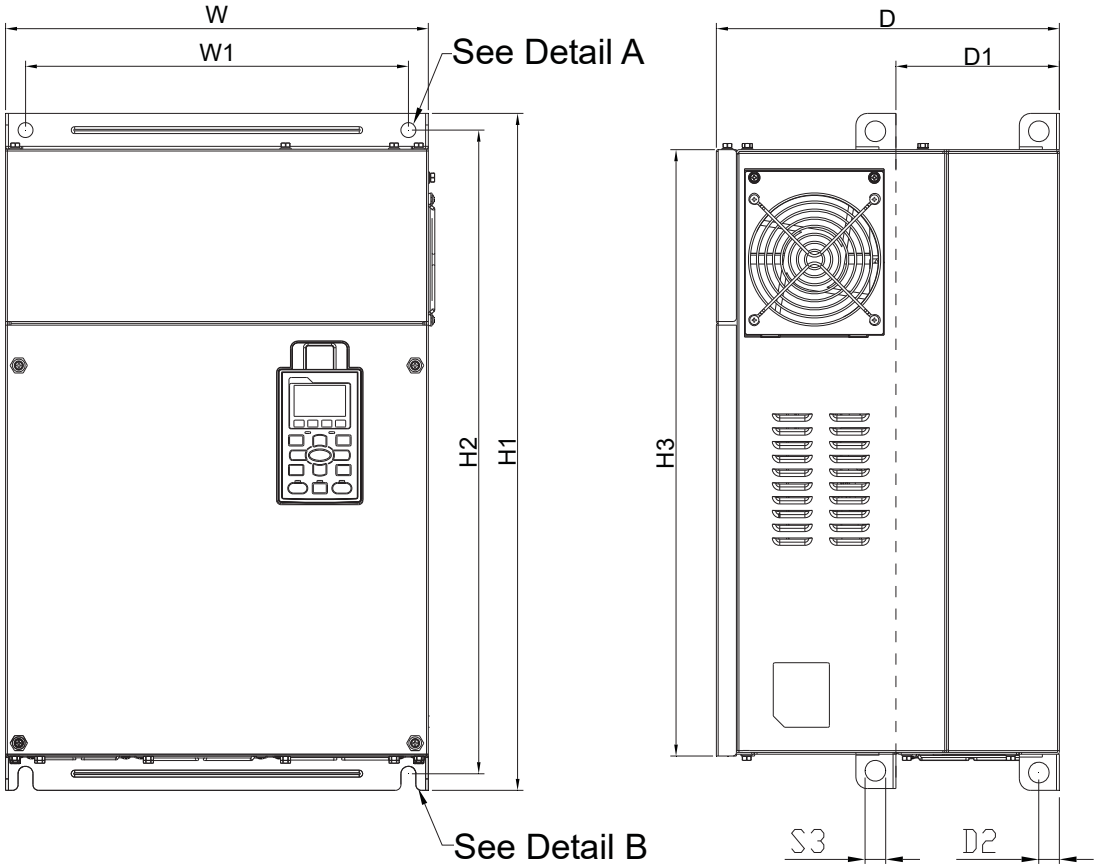

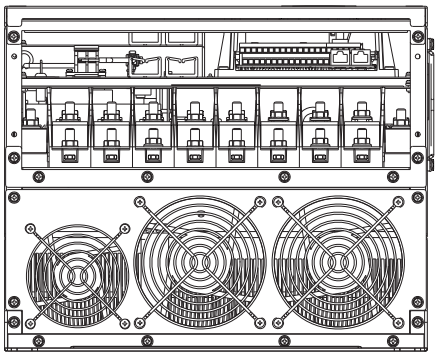

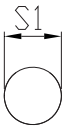

Detail A
(Mounting Hole)

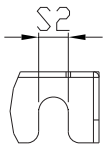

Detail B
(Mounting Hole)

Figure 1-22

Unit: mm [inch]

Frame	W	H	D	W1	H1	H2	H3	D1*	D2	S1, S2	S3	Φ1	Φ2	Φ3
E1	370.0 [14.57]	-	300.0 [11.81]	335.0 [13.19	589 [23.19]	560.0 [22.05]	528.0 [20.80]	143.0 [5.63]	18.0 [0.71]	13.0 [0.51]	18.0 [0.71]	-	-	-

D1*: Flange mounting

Frame E

E2: VFD450C23A-21; VFD550C23A-21; VFD750C23A-21; VFD750C63B-21; VFD900C43A-21; VFD900C63B-21; VFD1100C43A-21; VFD1100C63B-21; VFD1320C63B-21

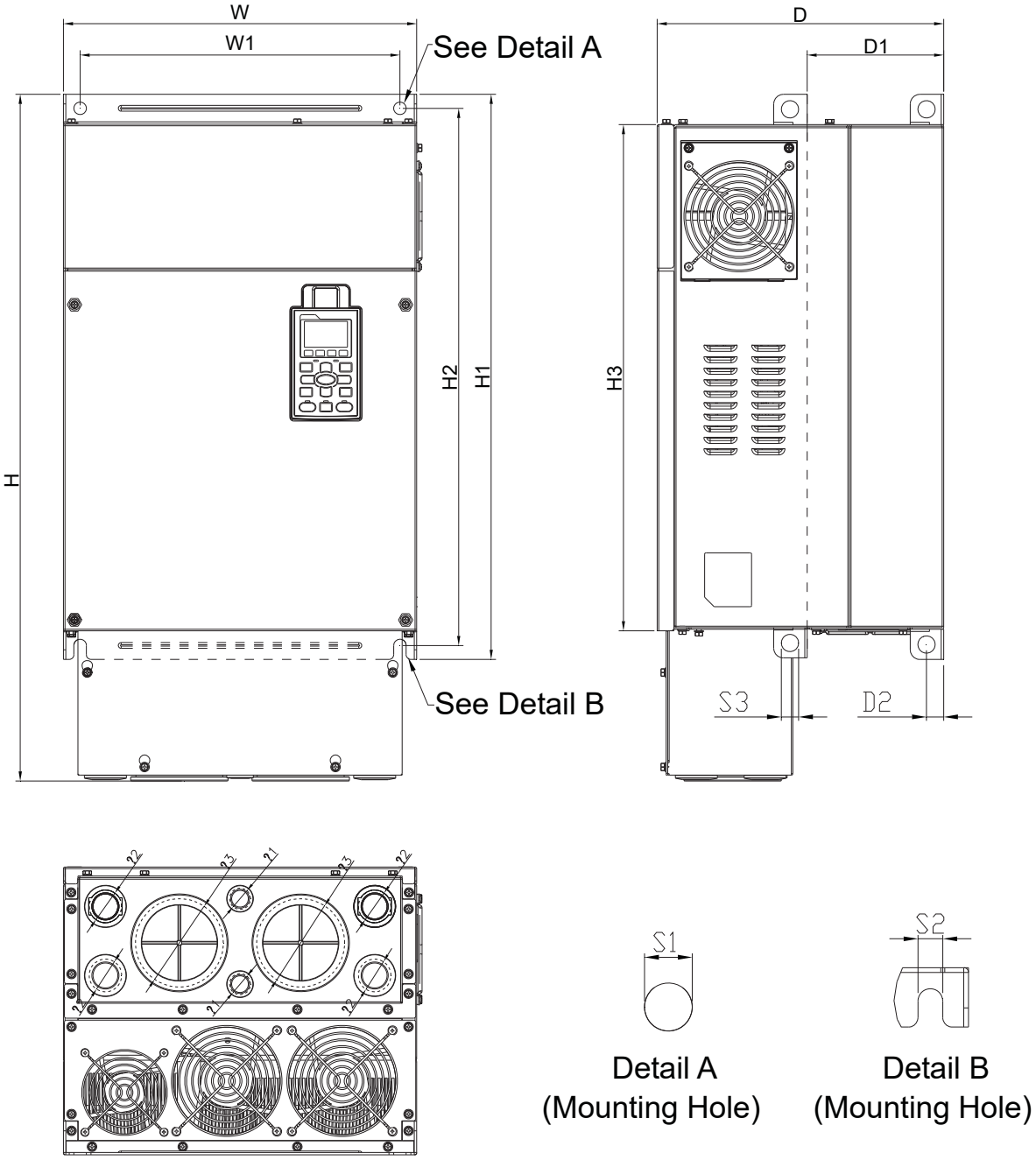

Figure 1-23

Unit: mm [inch]

Frame	W	H	D	W1	H1	H2	H3	D1*	D2	S1, S2	S3	Φ1	Φ2	Φ3
E2	370.0 [14.57]	715.8 [28.18]	300.0 [11.81]	335.0 [13.19	589 [23.19]	560.0 [22.05]	528.0 [20.80]	143.0 [5.63]	18.0 [0.71]	13.0 [0.51]	18.0 [0.71]	22.0 [0.87]	34.0 [1.34]	92.0 [3.62]

D1*: Flange mounting

Frame F

F1: VFD900C23A-00; VFD1320C43A-00; VFD1600C43A-00; VFD1600C63B-00; VFD2000C63B-00

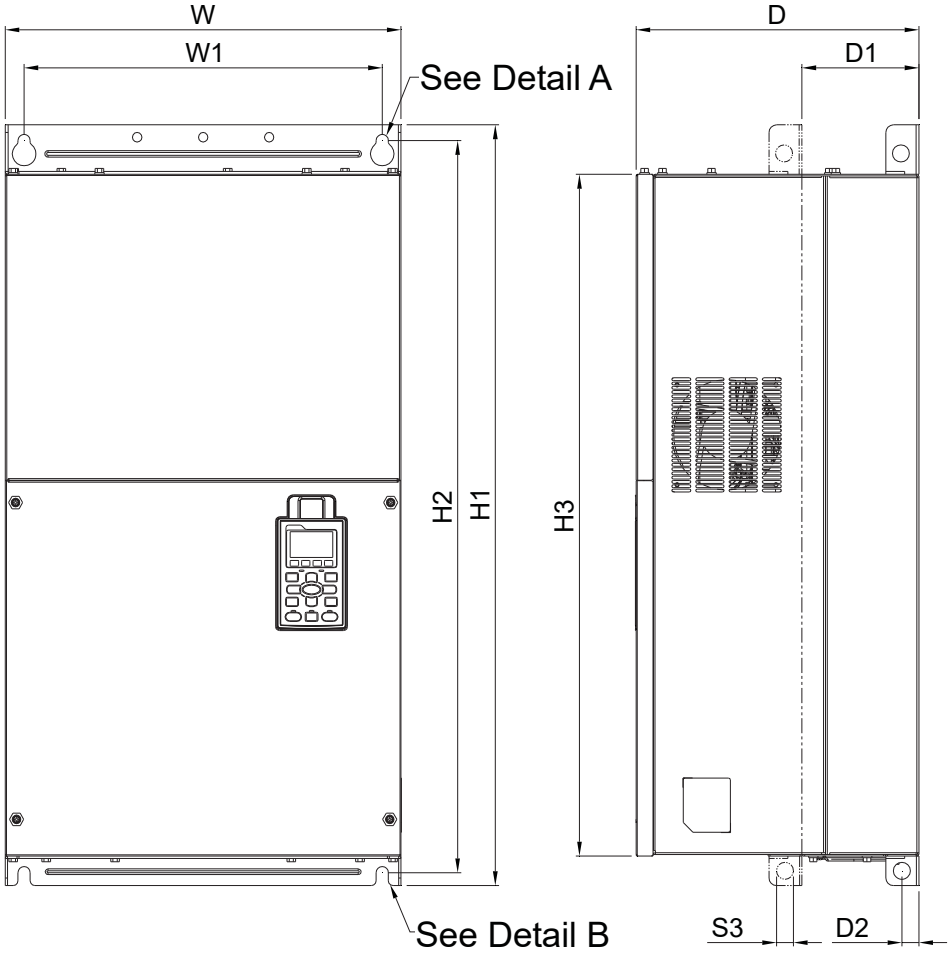

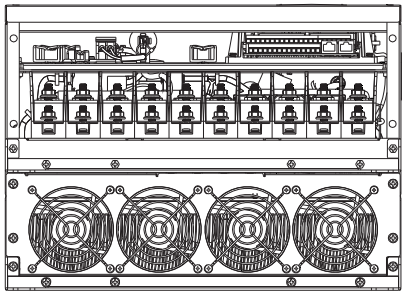

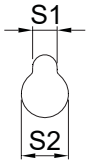

Detail A (Mounting Hole)

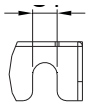

Detail B (Mounting Hole)

Figure 1-24

Unit: mm [inch]

Frame	W	H	D	W1	H1	H2	H3	D1*	D2	S1	S2	S3
F1	420.0 [16.54]	-	300.0 [11.81]	380.0 [14.96]	800.0 [31.50]	770.0 [30.32]	717.0 [28.23]	124.0 [4.88]	18.0 [0.71]	13.0 [0.51]	25.0 [0.98]	18.0 [0.71]

D1*: Flange mounting

Frame F

F2: VFD900C23A-21; VFD1320C43A-21; VFD1600C43A-21; VFD1600C63B-21; VFD2000C63B-21

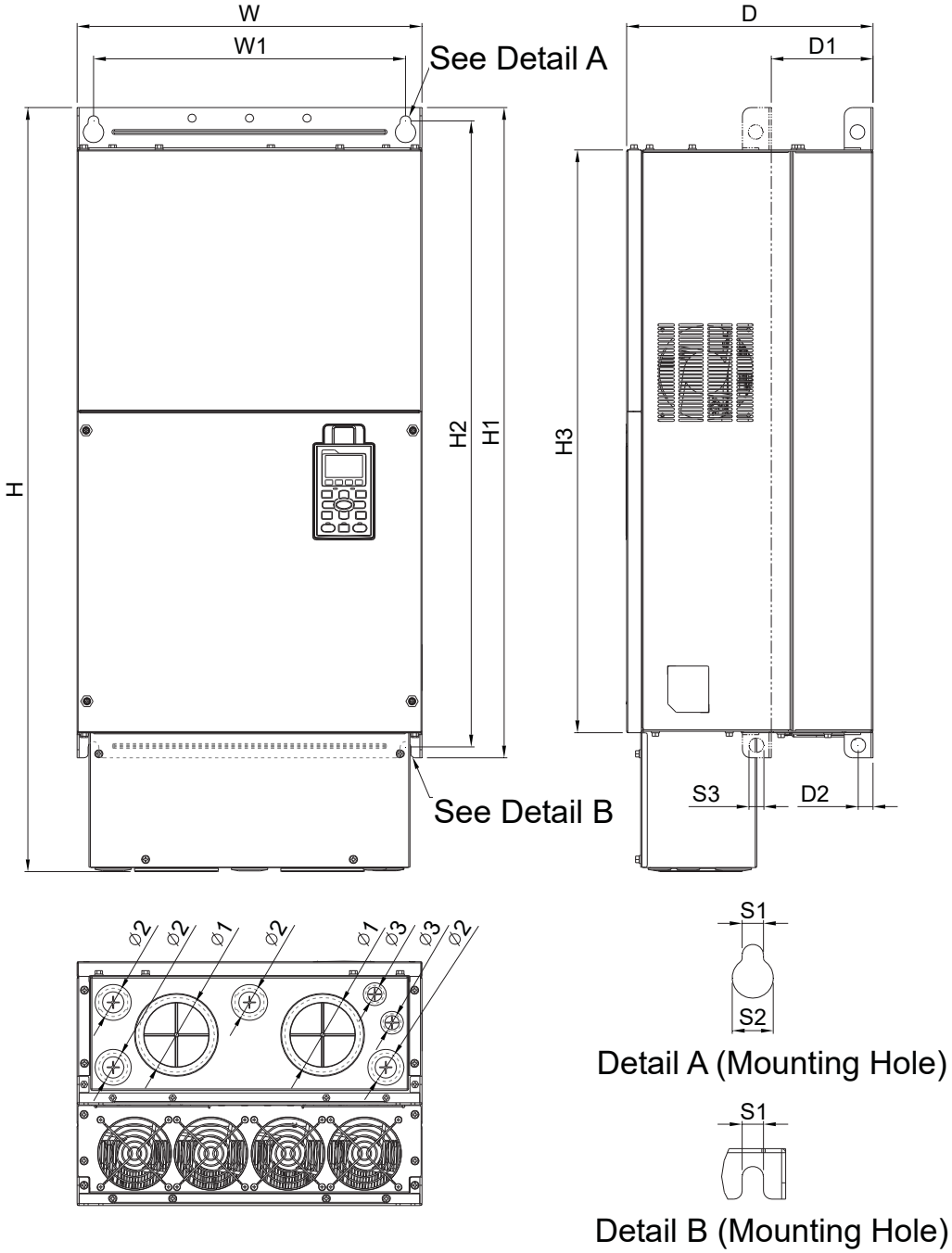

Figure 1-25

Unit: mm [inch]

Frame	W	H	D	W1	H1	H2	H3	D1*	D2	S1	S2	S3
F2	420.0 [16.54]	940.0 [37.00]	300.0 [11.81]	380.0 [14.96]	800.0 [31.50]	770.0 [30.32]	717.0 [28.23]	124.0 [4.88]	18.0 [0.71]	13.0 [0.51]	25.0 [0.98]	18.0 [0.71]

Frame	Φ1	Φ2	Φ3
F2	92.0 [3.62]	35.0 [1.38]	22.0 [0.87]

D1*: Flange mounting

Frame G

G1: VFD1850C43A-00; VFD2000C43A-00; VFD2200C43A-00; VFD2500C43A-00; VFD2500C63B-00; VFD3150C63B-00

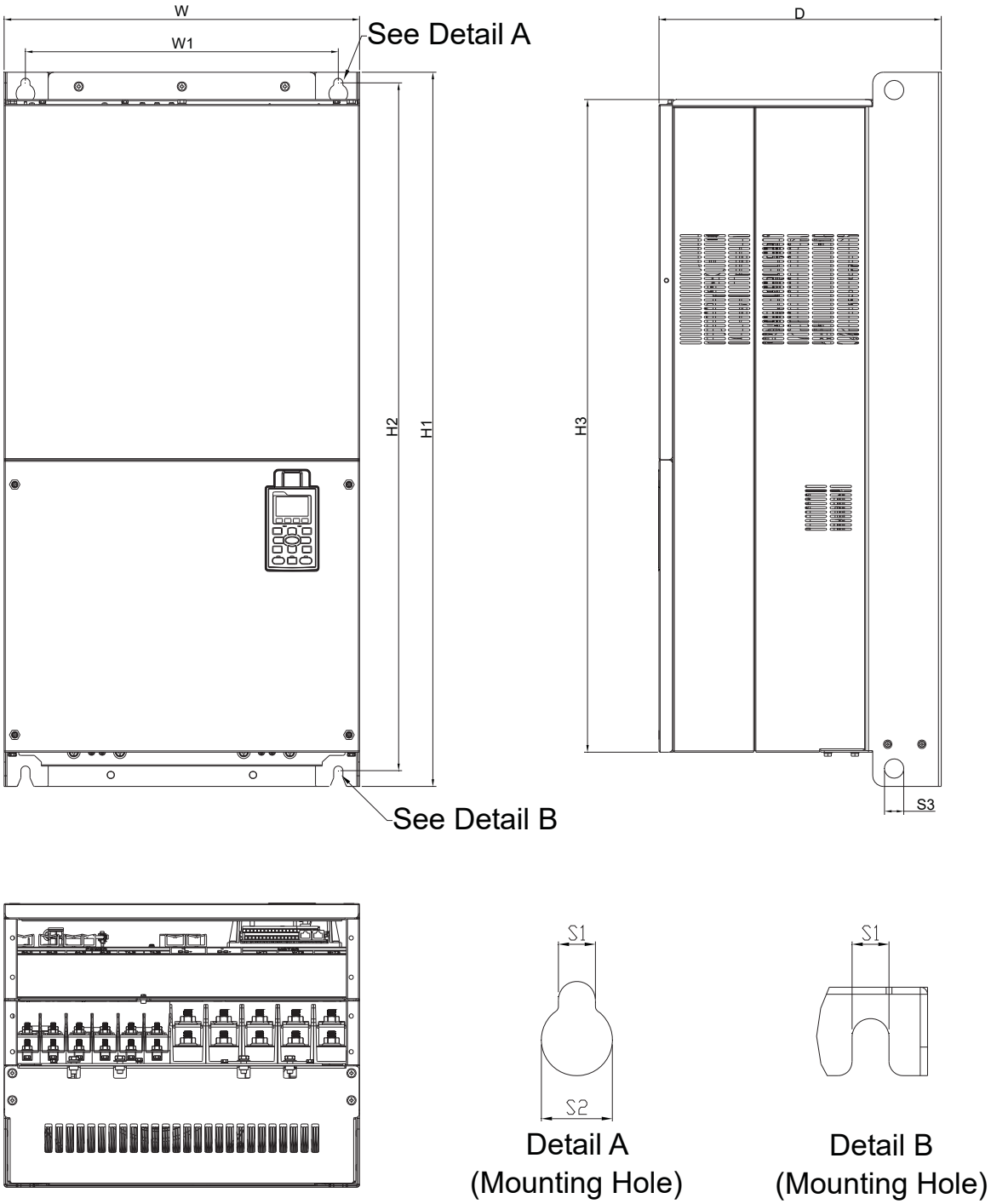

Figure 1-26

Unit: mm [inch]

Frame	W	H	D	W1	H1	H2	H3	S1	S2	S3	Φ1	Φ2	Φ3
G1	500.0 [19.69]	-	397.0 [15.63]	440.0 [217.32]	1000.0 [39.37]	963.0 [37.91]	913.6 [35.97]	13.0 [0.51]	26.5 [1.04]	27.0 [1.06]	-	-	-

Frame G

G2: VFD1850C43A-21; VFD2000C43A-21; VFD2200C43A-21; VFD2500C43A-21; VFD2500C63B-21; VFD3150C63B-21

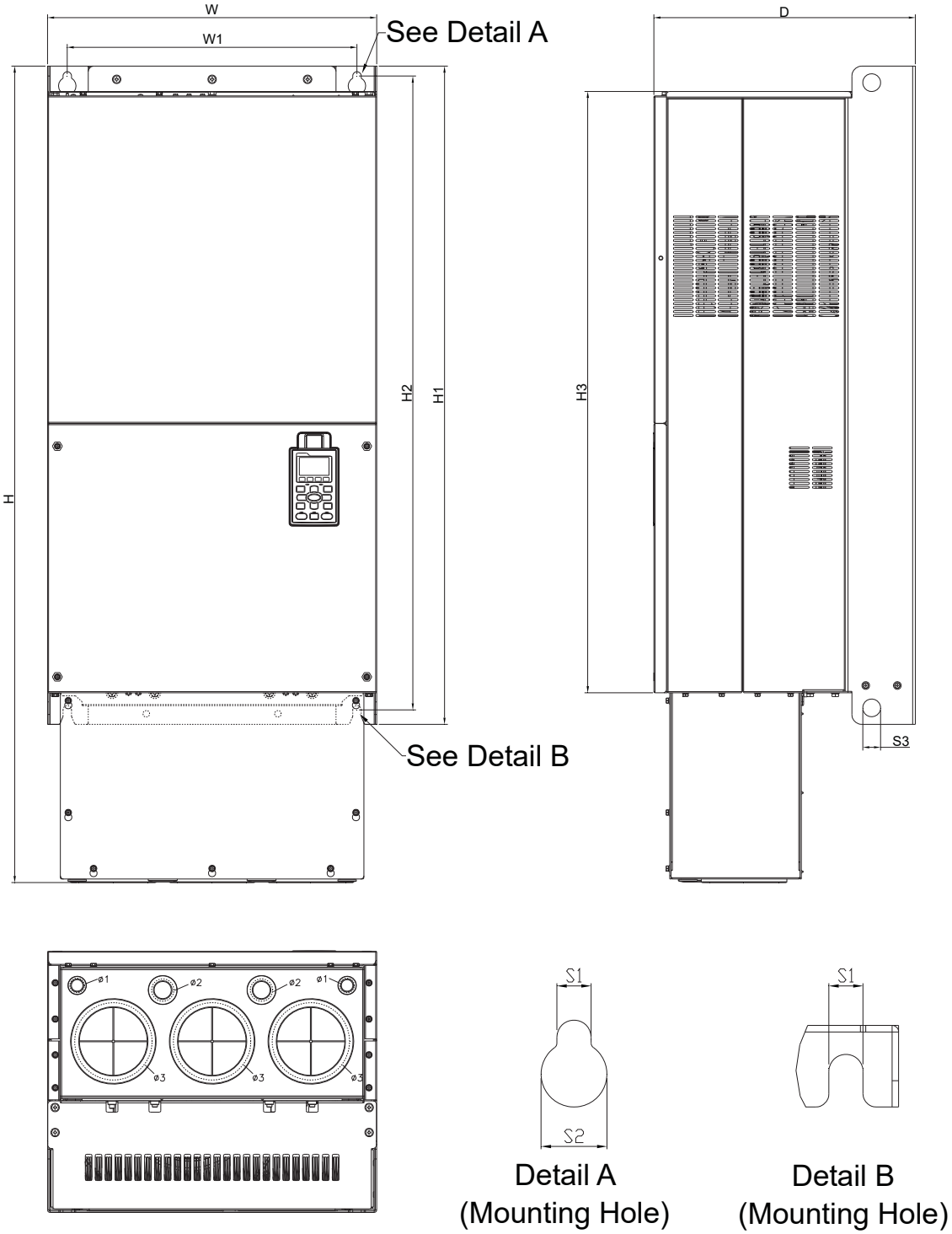

Figure 1-27

Unit: mm [inch]

Frame	W	H	D	W1	H1	H2	H3	S1	S2	S3	Φ1	Φ2	Φ3
G2	500.0 [19.69]	1240.2 [48.83]	397.0 [15.63]	440.0 [217.32]	1000.0 [39.37]	963.0 [37.91]	913.6 [35.97]	13.0 [0.51]	26.5 [1.04]	27.0 [1.06]	22.0 [0.87]	34.0 [1.34]	117.5 [4.63]

Frame H

H1: VFD2800C43A-00; VFD3150C43A-00; VFD3550C43A-00; VFD4000C43A-00; VFD4000C63B-00; VFD4500C43A-00; VFD4500C63B-00; VFD5000C43A-00; VFD5600C43A-00; VFD5600C63B-00; VFD6300C63B-00

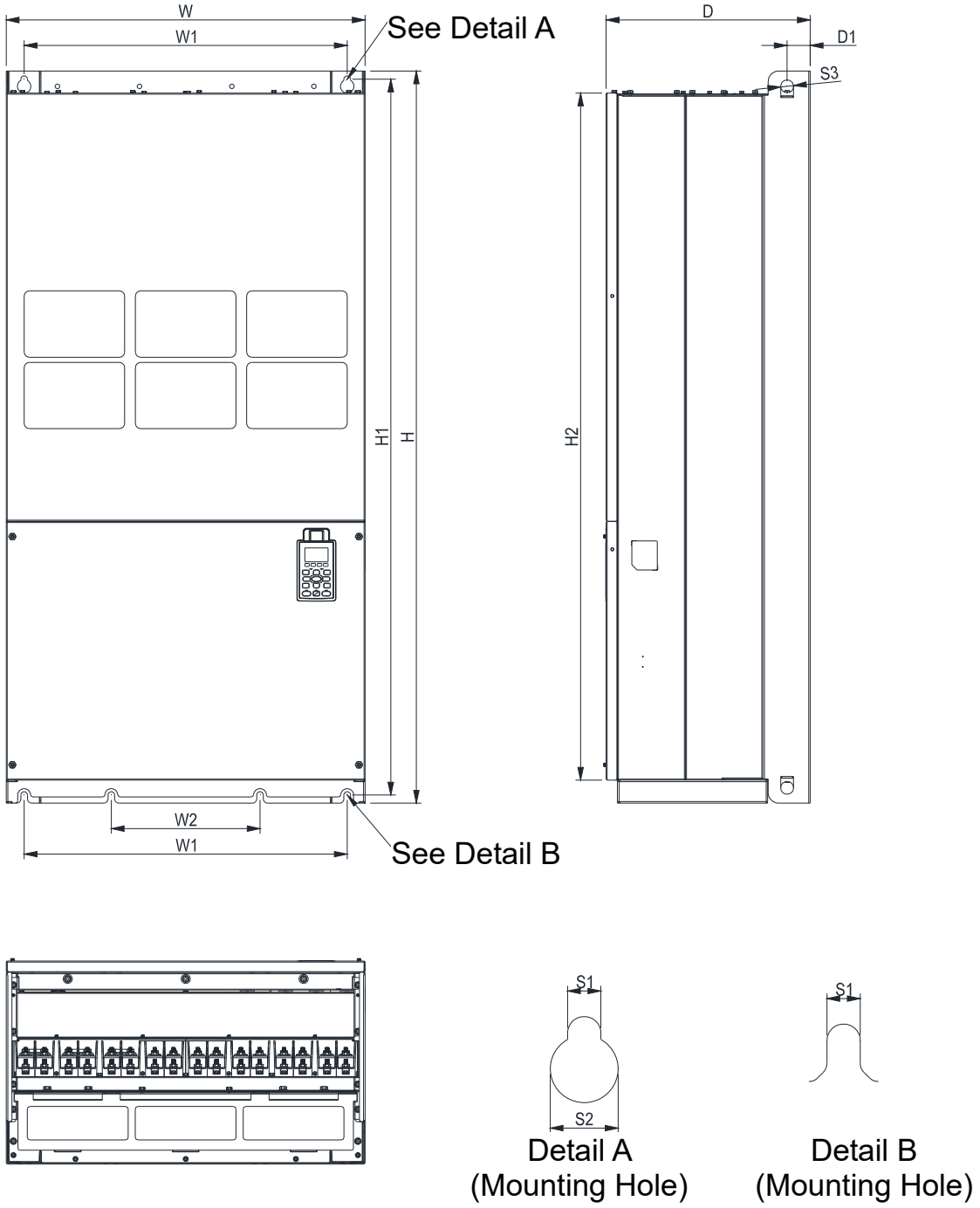

Figure 1-28

Unit: mm [inch]

Frame	W	H	D	W1	W2	W3	W4	W5	W6	H1	H2	H3	H4
H1	700.0 [27.56]	1435.0 [56.5]	398.0 [15.67]	630.0 [24.8]	290.0 [11.42]	-	-	-	-	1403.0 [55.24]	1346.6 [53.02]	-	-

Frame	H5	D1	D2	D3	D4	D5	D6	S1	S2	S3	Φ1	Φ2	Φ3
H1	-	45.0 [1.77]	-	-	-	-	-	13.0 [0.51]	26.5 [1.04]	25.0 [0.98]	-	-	-

Frame H

H3: VFD2800C43C-21; VFD3150C43C-21; VFD3550C43C-21; VFD4000C43C-21; VFD4500C43C-21; VFD5000C43C-21; VFD5600C43C-21

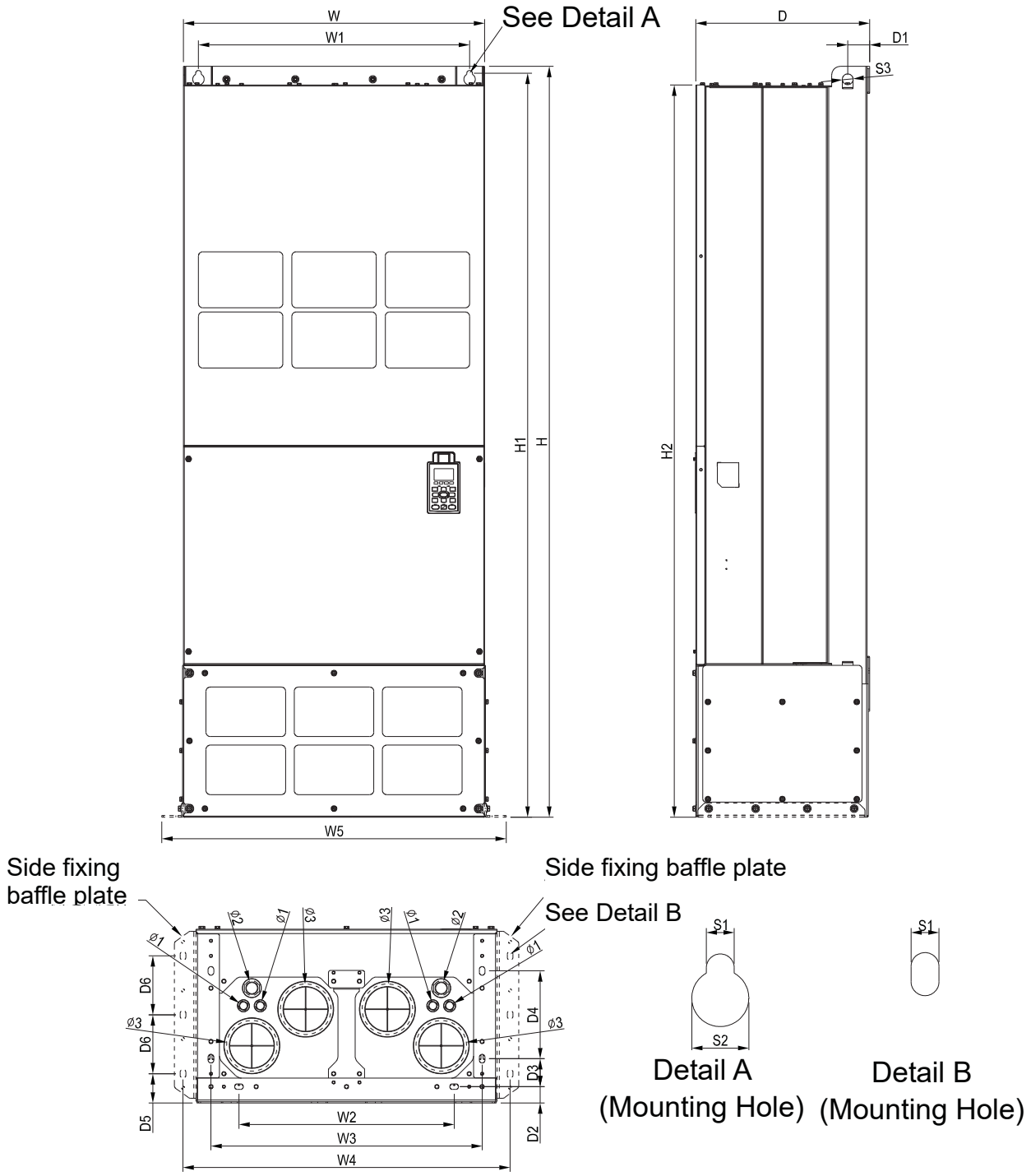

Figure 1-30

Unit: mm [inch]

Frame	W	H	D	W1	W2	W3	W4	W5	W6	H1	H2	H3	H4
H3	700.0 [27.56]	1745.0 [68.70]	404.0 [15.91]	630.0 [24.8]	500.0 [19.69]	630.0 [24.8]	760.0 [29.92]	800.0 [31.5]	-	1729.0 [68.07]	1701.6 [66.99]	-	-

Frame	H5	D1	D2	D3	D4	D5	D6	S1	S2	S3	Φ1	Φ2	Φ3
H3	-	51.0 [2.01]	38.0 [1.50]	65.0 [2.56]	204.0 [8.03]	68.0 [2.68]	137.0 [5.39]	13.0 [0.51]	26.5 [1.04]	25.0 [0.98]	22.0 [0.87]	34.0 [1.34]	117.5 [4.63]

690V Frame H

H2: VFD4000C63B-21; VFD4500C63B-21; VFD5600C63B-21; VFD6300C63B-21

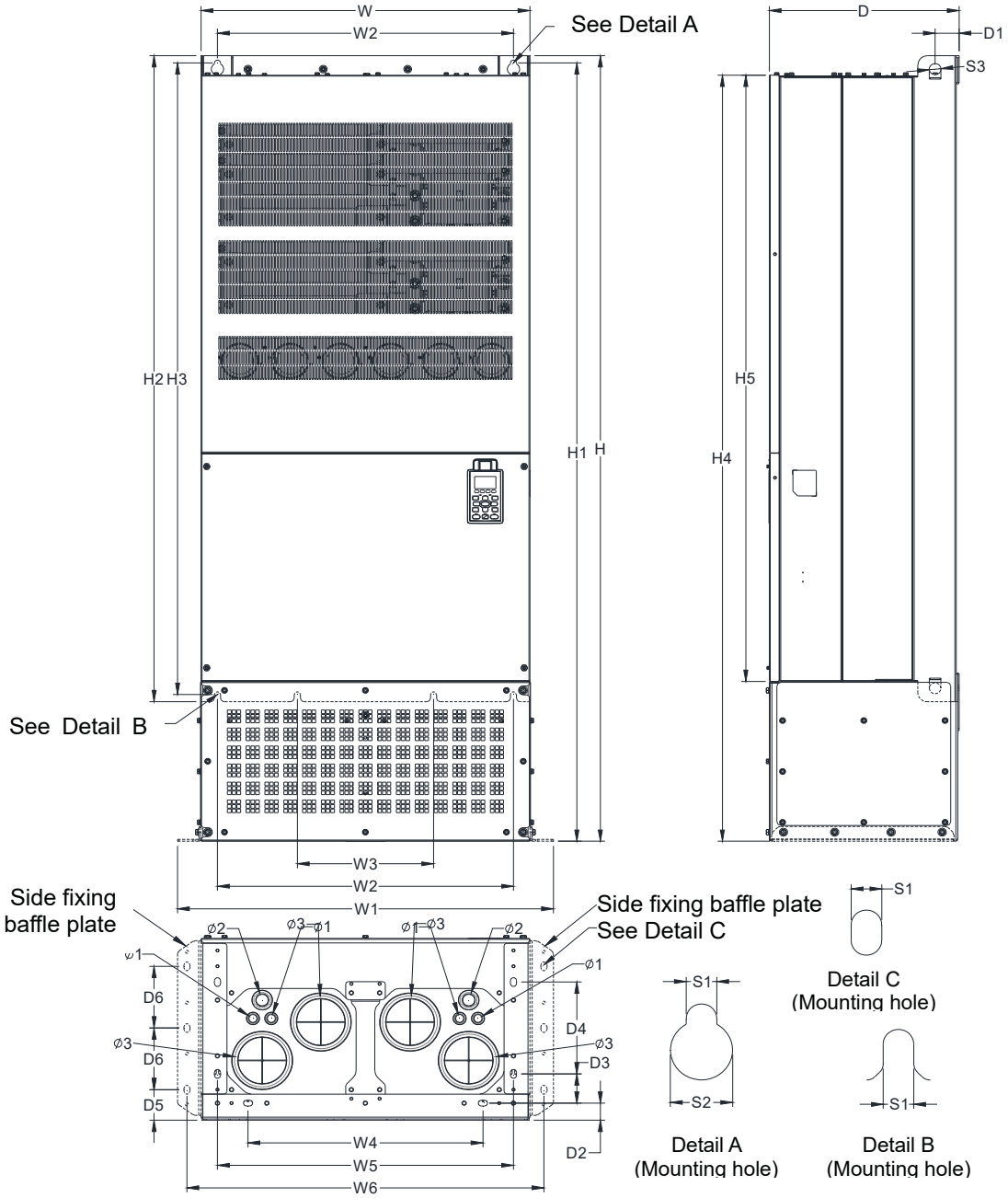

Figure 1-31

Unit: mm [inch]

Frame	W	H	D	W1	W2	W3	W4	W5	W6	H1	H2	H3	H4
H2	700.0 [27.56]	1745.0 [68.70]	404.0 [15.91]	630.0 [24.8]	500.0 [19.69]	630.0 [24.8]	760.0 [29.92]	800.0 [31.5]	-	1729.0 [68.07]	1701.6 [66.99]	-	-

Frame	H5	D1	D2	D3	D4	D5	D6	S1	S2	S3	Φ1	Φ2	Φ3
H2	-	51.0 [2.01]	38.0 [1.50]	65.0 [2.56]	204.0 [8.03]	68.0 [2.68]	137.0 [5.39]	13.0 [0.51]	26.5 [1.04]	25.0 [0.98]	22.0 [0.87]	34.0 [1.34]	117.5 [4.63]

Digital Keypad

KPC-CC01

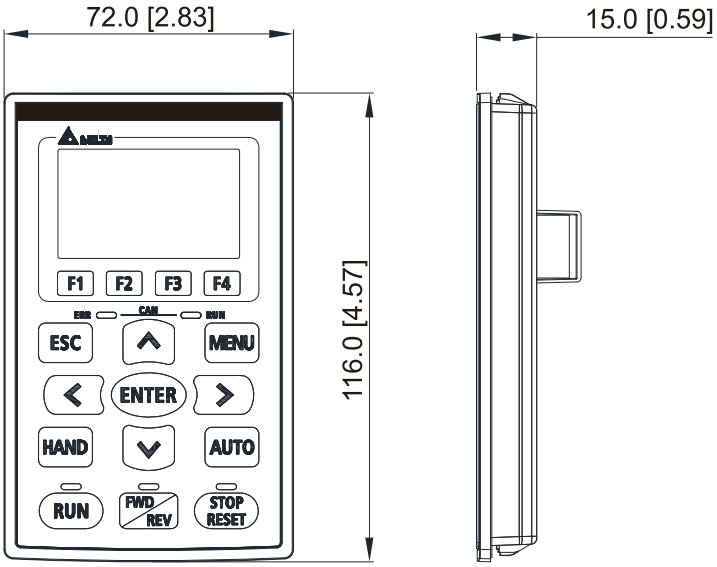

Figure 1-32

Summary of Parameter Settings

This chapter provides a summary of parameter (Pr.) setting ranges and defaults. You can set, change, and reset parameters through the digital keypad.

NOTE

1) ✓: You can set this parameter during operation
2) The following are abbreviations for different types of motors:
   - IM: Induction motor
   - PM: Permanent magnet synchronous AC motor
   - IPM: Interior permanent magnet synchronous AC motor
   - SPM: Surface permanent magnet synchronous AC motor
   - SynRM: Synchronous reluctance motor

00 Drive Parameters

Pr.	Parameter Name	Setting Range	Default
00-00	AC motor drive identity code	4: 230V, 0.75 kW 5: 460V, 0.75 kW 6: 230V, 1.50 kW 7: 460V, 1.50 kW 8: 230V, 2.20 kW 9: 460V, 2.20 kW 10: 230V, 3.70 kW 11: 460V, 3.70 kW 12: 230V, 5.50 kW 13: 460V, 5.50 kW 14: 230V, 7.50 kW 15: 460V, 7.50 kW 16: 230V, 11.0 kW 17: 460V, 11.0 kW 18: 230V, 15.0 kW 19: 460V, 15.0 kW 20: 230V, 18.5 kW 21: 460V, 18.5 kW 22: 230V, 22.0 kW 23: 460V, 22.0 kW 24: 230V, 30.0 kW 25: 460V, 30.0 kW 26: 230V, 37.0 kW 27: 460V, 37.0 kW 28: 230V, 45.0 kW 29: 460V, 45.0 kW 30: 230V, 55.0 kW	Read only

Pr.	Parameter Name	Setting Range	Default
		31: 460V, 55.0 kW 32: 230V, 75.0 kW 33: 460V, 75.0 kW 34: 230V, 90.0 kW 35: 460V, 90.0 kW 37: 460V, 110.0 kW 39: 460V, 132.0 kW 41: 460V, 160.0 kW 43: 460V, 185.0 kW 45: 460V, 220.0 kW 47: 460V, 280.0 kW 49: 460V, 315.0 kW 51: 460V, 355.0 kW 53: 460V, 400.0 kW 55: 460V, 450.0 kW 57: 460V, 500.0 kW 59: 460V, 560.0 kW 93: 460V, 4 kW 486: 460V, 200.0 kW 487: 460V, 250.0 kW 505: 575V, 1.5 kW 506: 575V, 2.2 kW 507: 575V, 3.7 kW 508: 575V, 5.5 kW 509: 575V, 7.5 kW 510: 575V, 11 kW 511: 575V, 15 kW 612: 690V, 18.5 kW 613: 690V, 22 kW 614: 690V, 30 kW 615: 690V, 37 kW 616: 690V, 45 kW 617: 690V, 55 kW 618: 690V, 75 kW 619: 690V, 90 kW 620: 690V, 110 kW 621: 690V, 132 kW 622: 690V, 160 kW 686: 690V, 200 kW 687: 690V, 250 kW 626: 690V, 315 kW 628: 690V, 400 kW 629: 690V, 450 kW	

	Pr.	Parameter Name	Setting Range	Default
			631: 690V, 560 kW 632: 690V, 630 kW	
	00-01	AC motor drive rated current display	Display by models	Read only
	00-02	Parameter reset	0: No function 1: Write protection for parameters 5: Return kWh displays to 0 6: Reset PLC (including CANopen Master Index) 7: Reset CANopen Slave index 9: Reset all parameters to defaults (base frequency is 50 Hz) 10: Reset all parameters to defaults (base frequency is 60 Hz)	0
✓	00-03	Start-up display	0: F (frequency command) 1: H (output frequency) 2: U (user-defined, see Pr.00-04) 3: A (output current)	0
✓	00-04	Content of multi-function display (user-defined)	0: Display output current (A) (unit: Amp) 1: Display counter value (c) (Unit: CNT) 2: Display the motor's actual output frequency (H.) (Unit: Hz) 3: Display the drive's DC bus voltage (v) (Unit: V_{DC}) 4: Display the drive's output voltage (E) (Unit: V_{AC}) 5: Display the drive's output power angle (n) (Unit: deg) 6: Display the drive's output power (P) (Unit: kW) 7: Display the motor speed rpm (r) (Unit: rpm) 8: Display the drive's estimated output torque, motor's rated torque is 100% (t) (Unit: %) 9: Display PG feedback (G) (refer to Pr.10-00 and Pr.10-01) (Unit: PLS) 10: Display PID feedback (b) (Unit: %) 11: Display AVI analog input terminal signal (1.) (Unit: %) 12: Display ACI analog input terminal signal (2.) (Unit: %) 13: Display AUI analog input terminal signal (3.) (Unit: %) 14: Display the drive's IGBT temperature (i.) (Unit: °C) 15: Display the drive's capacitance temperature (c.) (Unit: °C) 16: The digital input status (ON / OFF) (i) 17: The digital output status (ON / OFF) (o)	3

Pr.	Parameter Name	Setting Range	Default
		18: Display multi-step speed (S) 19: The corresponding CPU digital input pin status (d) 20: The corresponding CPU digital output pin status (0.) 21: Actual motor position (PG1 of PG card) (P.) The maximum value is 32bits display 22: Pulse input frequency (PG2 of PG card) (S.) 23: Pulse input position (PG2 of PG card) (q.) The maximum value is 32bits display 24: Position command tracing error (E.) 25: Overload count (0.00–100.00%) (o.) (Unit: %) 26: Ground fault GFF (G.) (Unit: %) 27: DC bus voltage ripple (r.) (Unit: V_{DC}) 28: Display PLC register D1043 data (C) 29: Display PM pole section (EMC-PG01U application) (4.) 30: Display the output of user-defined (U) 31: Display Pr.00-05 user gain (K) 32: Number of actual motor revolution during operation (PG card plug in and Z phase signal input) (Z.) 34: Operation speed of fan (F.) (Unit: %) 35: Control mode display: 0 = Speed control mode (SPD) 1 = Torque control mode (TQR) (t.) 36: Present operating carrier frequency of the drive (Unit: Hz) (J.) 38: Display the drive status (6.) 39: Display the drive's estimated output torque, positive and negative, using Nt-m as unit (t 0.0: positive torque; -0.0: negative torque (C.) 40: Torque command (L.) (Unit: %) 41: kWh display (J) (Unit: kWh) 42: PID target value (h.) (Unit: %) 43: PID compensation (o.) (Unit: %) 44: PID output frequency (b.) (Unit: Hz) 45: Hardware ID 49: Motor temperature (KTY84-130 only) 51: PMSVC torque offset 52: AI10% 53: AI11% 54: PMFOC Ke estimation value	

	Pr.	Parameter Name	Setting Range	Default
			68: STO version (d) 69: STO checksum-high word (d) 70: STO checksum-low word (d)	
✓	00-05	Coefficient gain in actual output frequency	0.00–160.00	1.00
	00-06	Firmware version	Read only	Read only
✓	00-07	Parameter protection password input	0–65535 0–4: the number of password attempts allowed	0
✓	00-08	Parameter protection password setting	0–65535 0: No password protection or password entered correctly (Pr.00-07) 1: Parameter has been set	0
✓	00-10	Control mode	0: Speed control mode 1: Position control mode 2: Torque mode	0
	00-11	Speed control mode	0: IMVF (IM V/F control) 1: IMVFPG (IM V/F control + Encoder) 2: IM / PM SVC (IM / PM space vector control) 3: IMFOCPG (IM FOC + Encoder) 4: PMFOCPG (PM FOC + Encoder) 5: IMFOC sensorless (IM field-oriented sensorless vector control) 6: PM sensorless (PM field-oriented sensorless vector control) 7: IPM sensorless (Interior PM field-oriented sensorless vector control) 8: SynRM sensorless control	0
	00-13	Torque mode control	0: IM TQCPG (IM torque control + Encoder) 1: PM TQCPG (PM torque control + Encoder) 2: IM TQC sensorless (IM sensorless torque control) 4: SynRM TQC sensorless (SynRM sensorless torque control)	0
	00-16	Load selection	230V / 460V models 0: Heavy load 1: Super Heavy load	0
			575V / 690V models 0: Normal load 1: Heavy load 2: Light load	2

<table>
<tr><th>Pr.</th><th>Parameter Name</th><th>Setting Range</th><th>Default</th></tr>
<tr><td rowspan="3">00-17</td><td rowspan="3">Carrier frequency (kHz)</td><td>Heavy duty
<table>
<tr><th>Control mode / Model</th><th>VF, VFPG, SVC</th><th>IMFOC PG, IMTQC PG</th><th>PMFOC PG PMTQC PG</th><th>PMFOC, IPMFOC</th><th>IMFOC, IMTQC</th><th>SRM FOC*</th></tr>
<tr><td>VFD007–110C23A/E
VFD007–150C43A/E</td><td>2–15</td><td>2–10</td><td>4–10</td><td>4–10</td><td>4–12</td><td>4–8</td></tr>
<tr><td>VFD150–370C23A/E
VFD185–550C43A/E</td><td>2–10</td><td>2–10</td><td>4–10</td><td>4–10</td><td>4–10</td><td>4–8</td></tr>
<tr><td>VFD450–900C23A/E
VFD750–5600C43A/E</td><td>2–9</td><td>2–9</td><td>4–9</td><td>4–9</td><td>4–9</td><td>4–8</td></tr>
</table>
*The default for SRMFOC is 4 kHz.</td><td>8
6
4</td></tr>
<tr><td>Super Heavy duty
<table>
<tr><th>Control mode / Model</th><th>VF, VFPG, SVC</th><th>IMFOC PG, IMTQC PG</th><th>PMFOC PG, PMTQC PG</th><th>PMFOC, IPMFOC</th><th>IMFOC, IMTQC</th><th>SRM FOC*</th></tr>
<tr><td>VFD007–110C23A/E
VFD007–150C43A/E</td><td>2–15</td><td>2–10</td><td>4–10</td><td>4–10</td><td>4–12</td><td>4–8</td></tr>
<tr><td>VFD150–450C23A/E
VFD185–550C43A/E</td><td>2–10</td><td>2–9</td><td>4–10</td><td>4–10</td><td>4–10</td><td>4–8</td></tr>
<tr><td>VFD550–900C23A/E
VFD750–3150C43A/E</td><td>2–9</td><td>2–9</td><td>4–9</td><td>4–9</td><td>4–9</td><td>4–8</td></tr>
<tr><td>VFD3550–5600C43A
VFD3550–5600C43E</td><td>2–9</td><td>2–9</td><td>4–9</td><td>4–9</td><td>4–9</td><td>4–8</td></tr>
</table>
*The default for SRMFOC is 4 kHz.</td><td>4
4
4
3</td></tr>
<tr><td>575V/690V (Light / Heavy / Super Heavy duty)
<table>
<tr><th>Power/ Control mode</th><th>VF, VFPG, SVC</th></tr>
<tr><td>1–15 HP (575V)</td><td>2–15 kHz</td></tr>
<tr><td>20–600 HP (690V)</td><td>2–9 kHz</td></tr>
<tr><td>850 HP (690V)</td><td>2–9 kHz</td></tr>
</table></td><td>6
4
3</td></tr>
<tr><td>00-19</td><td>PLC command mask</td><td>bit0: Control command is forced by PLC control
bit1: Frequency command is forced by PLC control
bit2: Position command is forced by PLC control
bit3: Torque command is forced by PLC control</td><td>Read only</td></tr>
<tr><td>00-20</td><td>Master frequency command source (AUTO)/ Source selection of the PID target</td><td>0: Digital keypad
1: RS-485 communication input
2: External analog input (Refer to Pr.03-00–03-02)
3: External UP / DOWN terminal (multi-function input terminals)
4: Pulse input without direction command (refer to Pr.10-16 without considering direction), use with PG card
5: Pulse input with direction command (refer to Pr.10-16), use with PG card
6: CANopen communication card
8: Communication card (does not include CANopen card)</td><td>0</td></tr>
</table>

	Pr.	Parameter Name	Setting Range	Default
	00-21	Operation command source (AUTO)	0: Digital keypad 1: External terminals 2: RS-485 communication input 3: CANopen communication card 5: Communication card (does not include CANopen card)	0
✓	00-22	Stop method	0: Ramp to stop 1: Coast to stop	0
✓	00-23	Motor direction control	0: Enable forward / reverse 1: Disable reverse 2: Disable forward	0
	00-24	Digital operator (keypad) frequency command memory	Read only	Read only
✓	00-25	User defined characteristics	bit0–3: user-defined decimal place 0000b: no decimal place 0001b: one decimal place 0010b: two decimal places 0011b: three decimal places bit4–15: user-defined unit 000xh: Hz 001xh: rpm 002xh: % 003xh: kg 004xh: m/s 005xh: kW 006xh: HP 007xh: ppm 008xh: 1/m 009xh: kg/s 00Axh: kg/m 00Bxh: kg/h 00Cxh: lb/s 00Dxh: lb/m 00Exh: lb/h 00Fxh: ft/s 010xh: ft/m 011xh: m 012xh: ft 013xh: degC 014xh: degF 015xh: mbar	0

Pr.	Parameter Name	Setting Range	Default
		016xh: bar 017xh: Pa 018xh: kPa 019xh: mWG 01Axh: inWG 01Bxh: ftWG 01Cxh: psi 01Dxh: atm 01Exh: L/s 01Fxh: L/m 020xh: L/h 021xh: m3/s 022xh: m3/h 023xh: GPM 024xh: CFM xxxxh: Hz	
00-26	Maximum user-defined value	0: Disabled 0–65535 (when Pr.00-25 is set to no decimal place) 0.0–6553.5 (when Pr.00-25 is set to 1 decimal place) 0.00–655.35 (when Pr.00-25 is set to 2 decimal places) 0.000–65.535 (when Pr.00-25 is set to 3 decimal places)	0
00-27	User-defined value	Read only	Read only
00-29	LOCAL / REMOTE selection	0: Standard HOA function 1: When switching between local and remote, the drive stops. 2: When switching between local and remote, the drive runs with REMOTE settings for frequency and operation status. 3: When switching between local and remote, the drive runs with LOCAL settings for frequency and operation status. 4: When switching between local and remote, the drive runs with LOCAL settings when switched to Local and runs with REMOTE settings when switched to Remote for frequency and operation status.	0
00-30	Master frequency command source (HAND)	0: Digital keypad 1: RS-485 communication input 2: External analog input (Refer to Pr.03-00–03-02) 3: External UP / DOWN terminal (multi-function input terminals)	0

	Pr.	Parameter Name	Setting Range	Default
			4: Pulse input without direction command (refer to Pr.10-16 without considering direction) 5: Pulse input with direction command (refer to Pr.10-16) 6: CANopen communication card 8: Communication card (does not include CANopen card)	
	00-31	Operation command source (HAND)	0: Digital keypad 1: External terminals 2: RS-485 communication input 3: CANopen communication card 5: Communication card (does not include CANopen card)	0
✓	00-32	Digital keypad STOP function	0: STOP key disabled 1: STOP key enabled	0
	00-33	RPWM mode selection	0: Disable 1: RPWM mode 1 2: RPWM mode 2 3: RPWM mode 3	0
✓	00-34	RPWM range	0.0–4.0 kHz Pr.00-17 = 4 kHz, 8 kHz: the setting range is 0.0–2.0 kHz Pr.00-17 = 5–7 kHz: the setting range is 0.0–4.0 kHz	0.0
✓	00-37	Over-modulation gain	80–120	100
✓	00-48	Display filter time (current)	0.001–65.535 sec.	0.100
✓	00-49	Display filter time (keypad)	0.001–65.535 sec.	0.100
	00-50	Software version (date)	Read only	Read only

01 Basic Parameters

	Pr.	Parameter Name	Setting Range	Default
✓	01-00	Maximum operation frequency of motor 1	0.00–599.00 Hz	60.00 / 50.00
	01-01	Rated / base frequency of motor 1	0.00–599.00 Hz	60.00 / 50.00
	01-02	Rated / base output voltage of motor 1	230V models: 0.0–255.0 V 460V models: 0.0–510.0 V 575V models: 0.0–637.0 V 690V models: 0.0–765.0 V	200.0 400.0 600.0 660.0
	01-03	Mid-point frequency 1 of motor 1	0.00–599.00 Hz	3.00
✓	01-04	Mid-point voltage 1 of motor 1	230V models: 0.0–240.0 V 460V models: 0.0–480.0 V 575V models: 0.0–637.0 V 690V models: 0.0–720.0 V	11.0 22.0 0.0 0.0
	01-05	Mid-point frequency 2 of motor 1	0.00–599.00 Hz	1.50
✓	01-06	Mid-point voltage 2 of motor 1	230V models: 0.0–240.0 V 460V models: 0.0–480.0 V 575V models: 0.0–637.0 V 690V models: 0.0–720.0 V	5.0 10.0 0.0 0.0
	01-07	Minimum output frequency of motor 1	0.00–599.00 Hz	0.50
✓	01-08	Minimum output voltage of motor 1	230V models: 0.0–240.0 V 460V models: 0.0–480.0 V 575V models: 0.0–637.0 V 690V models: 0.0–720.0 V	1.0 2.0 0.0 0.0
	01-09	Start-up frequency	0.00–599.00 Hz	0.50
✓	01-10	Output frequency upper limit	0.00–599.00 Hz	599.00
✓	01-11	Output frequency lower limit	0.00–599.00 Hz	0
✓	01-12	Acceleration time 1	Pr.01-45=0: 0.00–600.00 sec. Pr.01-45=1: 0.00–6000.0 sec. The default of motor drive with 30HP and above: 60.00 / 60.0	10.00
✓	01-13	Deceleration time 1	Pr.01-45=0: 0.00–600.00 sec. Pr.01-45=1: 0.00–6000.0 sec. The default of motor drive with 30HP and above: 60.00 / 60.0	10.00

	Pr.	Parameter Name	Setting Range	Default
✓	01-14	Acceleration time 2	Pr.01-45=0: 0.00–600.00 sec. Pr.01-45=1: 0.00–6000.0 sec. The default of motor drive with 30HP and above: 60.00 / 60.0	10.00
✓	01-15	Deceleration time 2	Pr.01-45=0: 0.00–600.00 sec. Pr.01-45=1: 0.00–6000.0 sec. The default of motor drive with 30HP and above: 60.00 / 60.0	10.00
✓	01-16	Acceleration time 3	Pr.01-45=0: 0.00–600.00 sec. Pr.01-45=1: 0.00–6000.0 sec. The default of motor drive with 30HP and above: 60.00 / 60.0	10.00
✓	01-17	Deceleration time 3	Pr.01-45=0: 0.00–600.00 sec. Pr.01-45=1: 0.00–6000.0 sec. The default of motor drive with 30HP and above: 60.00 / 60.0	10.00
✓	01-18	Acceleration time 4	Pr.01-45=0: 0.00–600.00 sec. Pr.01-45=1: 0.00–6000.0 sec. The default of motor drive with 30HP and above: 60.00 / 60.0	10.00
✓	01-19	Deceleration time 4	Pr.01-45=0: 0.00–600.00 sec. Pr.01-45=1: 0.00–6000.0 sec. The default of motor drive with 30HP and above: 60.00 / 60.0	10.00
✓	01-20	JOG acceleration time	Pr.01-45=0: 0.00–600.00 sec. Pr.01-45=1: 0.00–6000.0 sec. The default of motor drive with 30HP and above: 60.00 / 60.0	10.00
✓	01-21	JOG deceleration time	Pr.01-45=0: 0.00–600.00 sec. Pr.01-45=1: 0.00–6000.0 sec. The default of motor drive with 30HP and above: 60.00 / 60.0	10.00
✓	01-22	JOG frequency	0.00–599.00 Hz	6.00
✓	01-23	Switch frequency between first and fourth Accel./Decel.	0.00–599.00 Hz	0.00
✓	01-24	S-curve for acceleration begin time 1	Pr.01-45=0: 0.00–25.00 sec. Pr.01-45=1: 0.0–250.0 sec.	0.20
✓	01-25	S-curve for acceleration arrival time 2	Pr.01-45=0: 0.00–25.00 sec. Pr.01-45=1: 0.0–250.0 sec.	0.20
✓	01-26	S-curve for deceleration begin time 1	Pr.01-45=0: 0.00–25.00 sec. Pr.01-45=1: 0.0–250.0 sec.	0.20

	Pr.	Parameter Name	Setting Range	Default
✓	01-27	S-curve for deceleration arrival time 2	Pr.01-45=0: 0.00–25.00 sec. Pr.01-45=1: 0.0–250.0 sec.	0.20
	01-28	Skip frequency 1 (upper limit)	0.00–599.00 Hz	0.00
	01-29	Skip frequency 1 (lower limit)	0.00–599.00 Hz	0.00
	01-30	Skip frequency 2 (upper limit)	0.00–599.00 Hz	0.00
	01-31	Skip frequency 2 (lower limit)	0.00–599.00 Hz	0.00
	01-32	Skip frequency 3 (upper limit)	0.00–599.00 Hz	0.00
	01-33	Skip frequency 3 (lower limit)	0.00–599.00 Hz	0.00
	01-34	Zero-speed mode	0: Output waiting 1: Zero-speed operation 2: Minimum frequency (Refer to Pr.01-07 and Pr.01-41)	0
	01-35	Rated / base frequency of motor 2	0.00–599.00 Hz	60.00 / 50.00
	01-36	Rated / base output voltage of motor 2	230V models: 0.0–255.0 V 460V models: 0.0–510.0 V 575V models: 0.0–637.0 V 690V models: 0.0–765.0 V	200.0 400.0 600.0 660.0
	01-37	Mid-point frequency 1 of motor 2	0.00–599.00 Hz	3.00
✓	01-38	Mid-point voltage 1 of motor 2	230V models: 0.0–240.0 V 460V models: 0.0–480.0 V 575V models: 0.0–637.0 V 690V models: 0.0–720.0 V	11.0 22.0 0.0 0.0
	01-39	Mid-point frequency 2 of motor 2	0.00–599.00 Hz	1.50
✓	01-40	Mid-point voltage 2 of motor 2	230V models: 0.0–240.0 V 460V models: 0.0–480.0 V 575V models: 0.0–637.0 V 690V models: 0.0–720.0 V	5.0 10.0 0.0 0.0
	01-41	Minimum output frequency of motor 2	0.00–599.00 Hz	0.50
✓	01-42	Minimum output voltage of motor 2	230V models: 0.0–240.0 V 460V models: 0.0–480.0 V 575V models: 0.0–637.0 V 690V models: 0.0–720.0 V	1.0 2.0 0.0 0.0
	01-43	V/F curve selection	0: V/F curve determined by Pr.01-00–01-08 1: V/F curve to the power of 1.5 2: V/F curve to the power of 2 3: 60Hz, voltage saturation in 50Hz 4: 72Hz, voltage saturation in 60Hz	0

	Pr.	Parameter Name	Setting Range	Default
			5: 50Hz, decrease gradually with cube 6: 50Hz, decrease gradually with square 7: 60Hz, decrease gradually with cube 8: 60Hz, decrease gradually with square 9: 50Hz, medium starting torque 10: 50Hz, high starting torque 11: 60Hz, medium starting torque 12: 60Hz, high starting torque 13: 90Hz, voltage saturation in 60Hz 14: 120Hz, voltage saturation in 60Hz 15: 180Hz, voltage saturation in 60Hz	
✓	01-44	Auto-acceleration and auto-deceleration setting	0: Linear acceleration and deceleration 1: Auto-acceleration and linear deceleration 2: Linear acceleration and auto-deceleration 3: Auto-acceleration and auto-deceleration 4: Stall prevention by auto-acceleration and auto-deceleration (limited by Pr.01-12–Pr.01-21)	0
	01-45	Time unit for acceleration / deceleration and S-curve	0: Unit: 0.01 sec. 1: Unit: 0.1 sec.	0
✓	01-46	CANopen quick stop time	Pr.01-45=0: 0.00–600.00 sec. Pr.01-45=1: 0.0–6000.0 sec.	1.00
	01-49	Deceleration method selection	0: Normal deceleration 1: Over-voltage energy restriction 2: Traction energy control (TEC) 3: Electromagnetic energy traction control	0
✓	01-50	Electromagnetic traction energy consumption coefficient	0.00–5.00 Hz	0.50
✓	01-51	Flux-weakening overload stall prevention time	0.00–600.00 sec.	1.00

02 Digital Input / Output Parameters

Pr.	Parameter Name	Setting Range	Default
02-00	Two-wire / three-wire operation control	0: Two-wire mode 1, power on for operation control 1: Two-wire mode 2, power on for operation control 2: Three-wire, power on for operation control 7: Single-wire mode, the Servo ON terminal under position control mode (only the FWD terminal is valid)	0
02-01	Multi-function input command 1 (MI1)	0: No function 1: Multi-step speed command 1 / P2P position command 1 2: Multi-step speed command 2 / P2P position command 2 3: Multi-step speed command 3 / P2P position command 3 4: Multi-step speed command 4 / P2P position command 4 5: Reset 6: JOG operation (by external control or KPC-CC01) 7: Acceleration / deceleration speed inhibit 8: 1st and 2nd acceleration / deceleration time selection 9: 3rd and 4th acceleration / deceleration time selection 10: External Fault (EF) input (Pr.07-20) 11: Base Block (B.B) input from external 12: Output voltage stops 13: Cancel the setting of auto-acceleration / auto-deceleration time 14: Switch between motor 1 and motor 2 15: Rotating speed command from AVI 16: Rotating speed command from ACI 17: Rotating speed command from AUI 18: Forced to stop (Pr.07-20) 19: Frequency up command 20: Frequency down command 21: PID function disabled 22: Clear the counter 23: Input the counter value (MI6)	1
02-02	Multi-function input command 2 (MI2)		2
02-03	Multi-function input command 3 (MI3)		3
02-04	Multi-function input command 4 (MI4)		4
02-05	Multi-function input command 5 (MI5)		0
02-06	Multi-function input command 6 (MI6)		0
02-07	Multi-function input command 7 (MI7)		0
02-08	Multi-function input command 8 (MI8)		0
02-26	Input terminal of I/O extension card (MI10)		0
02-27	Input terminal of I/O extension card (MI11)		0
02-28	Input terminal of I/O extension card (MI12)		0
02-29	Input terminal of I/O extension card (MI13)		0
02-30	Input terminal of I/O extension card (MI14)		0
02-31	Input terminal of I/O extension card (MI15)		0

Pr.	Parameter Name	Setting Range	Default
		24: FWD JOG command 25: REV JOG command 26: TQC / FOC mode selection 27: ASR1 / ASR2 selection 28: Emergency stop (EF1) 29: Signal confirmation for Y-connection 30: Signal confirmation for Δ-connection 31: High torque bias (Pr.11-30) 32: Middle torque bias (Pr.11-31) 33: Low torque bias (Pr.11-32) 35: Enable single-point positioning 36: Enable P2P position teaching function– 37: Enable pulse-train position command position control 38: Disable write EEPROM function 39: Torque command direction 40: Force coasting to stop 41: HAND switch 42: AUTO switch 43: Enable resolution selection (Pr.02-48) 44: Negative limit switch (NL) 45: Positive limit switch (PL) 46: Homing (ORG) 47: Enable homing function 48: Mechanical gear ratio switch 49: Enable drive 50: Slave dEb action to execute 51: Selection for PLC mode bit 0 52: Selection for PLC mode bit 1 53: Trigger CANopen quick stop 55: Brake release 56: Local / Remote selection 88: P2P position command confirm 89: Speed / position control mode switch 0: Speed control mode 1: Position control mode 90: Position command source switch 0: Inputs from internal register 1: Inputs from external pulse	

	Pr.	Parameter Name	Setting Range	Default
✓	02-09	UP / DOWN key mode	0: UP / DOWN by the acceleration / deceleration time 1: UP / DOWN constant speed (Pr.02-10)	0
✓	02-10	Constant speed, acceleration / deceleration speed of the UP / DOWN key	0.001–1.000 Hz / ms	0.001
✓	02-11	Multi-function input response time	0.000–30.000 sec.	0.005
✓	02-12	Multi-function input mode selection	0000h–FFFFh (0: N.O.; 1: N.C.)	0000h
✓	02-13	Multi-function output 1 (Relay1)	0: No function 1: Indication during RUN 2: Operation speed reached 3: Desired frequency reached 1 (Pr.02-22) 4: Desired frequency reached 2 (Pr.02-24) 5: Zero speed (Frequency command) 6: Zero speed including STOP (Frequency command) 7: Over-torque 1 (Pr.06-06–06-08) 8: Over-torque 2 (Pr.06-09–06-11) 9: Drive is ready 10: Low voltage warning (Lv) (Pr.06-00) 11: Malfunction indication 12: Mechanical brake release (Pr.02-32) 13: Overheat warning (Pr.06-15) 14: Software brake signal indication (Pr.07-00) 15: PID feedback error (Pr.08-13, Pr.08-14) 16: Slip error (oSL) 17: Count value reached, does not return to 0 (Pr.02-20) 18: Count value reached, returns to 0 (Pr.02-19) 19: External interrupt B.B. input (Base Block) 20: Warning output 21: Over-voltage 22: Over-current stall prevention 23: Over-voltage stall prevention 24: Operation source 25: Forward command 26: Reverse command 27: Output when current ≥ Pr.02-33 28: Output when current < Pr.02-33	11
✓	02-14	Multi-function output 2 (Relay2)		1
✓	02-16	Multi-function output 3 (MO1)		66
✓	02-17	Multi-function output 4 (MO2)		0
✓	02-36	Output terminal of I/O extension card (MO10) or (RA10)		0
✓	02-37	Output terminal of I/O extension card (MO11) or (RA11)		0
✓	02-38	Output terminal of I/O extension card (RA12)		0
✓	02-39	Output terminal of I/O extension card (RA13)		0
✓	02-40	Output terminal of I/O extension card (RA14)		0
✓	02-41	Output terminal of I/O extension card (RA15)		0
✓	02-42	Output terminal of I/O extension card (MO16 virtual terminal)		0
✓	02-43	Output terminal of I/O extension card (MO17 virtual terminal)		0
✓	02-44	Output terminal of I/O extension card (MO18 virtual terminal)		0
✓	02-45	Output terminal of I/O extension card (MO19 virtual terminal)		0
✓	02-46	Output terminal of I/O extension card (MO20 virtual terminal)		0

	Pr.	Parameter Name	Setting Range	Default
			29: Output when frequency ≥ Pr.02-34 30: Output when frequency < Pr.02-34 31: Y-connection for the motor coil 32: Δ-connection for the motor coil 33: Zero speed (actual output frequency) 34: Zero speed including stop (actual output frequency) 35: Error output selection 1 (Pr.06-23) 36: Error output selection 2 (Pr.06-24) 37: Error output selection 3 (Pr.06-25) 38: Error output selection 4 (Pr.06-26) 39: Position reached (Pr.11-65, Pr.11-66) 40: Speed reached (including stop) 42: Crane function 43: Motor actual speed detection 44: Low current output (use with Pr.06-71–06-73) 45: UVW output electromagnetic valve switch 46: Master dEb output 47: Closed brake output 49: Homing action completed ~~output~~ 50: Output control for CANopen 51: Analog output control for RS-485 interface (InnerCOM / Modbus) 52: Output control for communication cards 65: Output control for both CAN & 485 66: SO output logic A 67: Analog input level reached 68: SO output logic B 70: FAN warning output 75: Forward running status 76: Reverse running status	
✓	02-18	Multi-function output direction	0000h–FFFFh (0: N.O.; 1: N.C.)	0000h
✓	02-19	Terminal counting value reached (returns to 0)	0–65500	0
✓	02-20	Preliminary counting value reached (does not return to 0)	0–65500	0
✓	02-21	Digital output gain (DFM)	1–166	1
✓	02-22	Desired frequency reached 1	0.00–599.00 Hz	60.00 / 50.00

	Pr.	Parameter Name	Setting Range	Default
✓	02-23	The width of the desired frequency reached 1	0.00–599.00 Hz	2.00
✓	02-24	Desired frequency reached 2	0.00–599.00 Hz	60.00 / 50.00
✓	02-25	The width of the desired frequency reached 2	0.00–599.00 Hz	2.00
	02-32	Brake delay time	0.000–65.000 sec.	0.000
✓	02-33	Output current level setting for multi-function output terminal	0–100%	0
✓	02-34	Output frequency setting for multi-function output terminal	0.00–599.00 Hz (Motor speed when using PG Card)	3.00
✓	02-35	External operation control selection after reset and reboot	0: Disable 1: Drive runs if the RUN command remains after reset or reboot	0
✓	02-47	Motor zero-speed level	0–65535 rpm	0
✓	02-48	Maximum frequency of resolution switch	0.00–599.00 Hz	60.00
✓	02-49	Switch delay time of maximum output frequency	0.000–65.000 sec.	0.000
	02-50	Display the status of multi-function input terminal	Monitor the status of multi-function input terminals	Read only
	02-51	Display the status of multi-function output terminal	Monitor the status of multi-function output terminals	Read only
	02-52	Display the external multi-function input terminals used by PLC	Monitor the status of PLC input terminals	Read only
	02-53	Display the external multi-function output terminals used by PLC	Monitor the status of PLC output terminals	Read only
	02-54	Display the frequency command executed by external terminal	0.00–599.00 Hz (Read only)	Read only
	02-56	Brake release check time	0.000–65.000 sec.	0.000
✓	02-57	Multi-function output terminal (function 42): brake current check point	0–100%	0
✓	02-58	Multi-function output terminal (function 42): brake frequency check point	0.00–599.00 Hz	0.00
	02-63	Frequency reached detection amplitude	0.00–599.00 Hz	0.00
	02-70	IO card types	1: EMC-BPS01 4: EMC-D611A	Read only

Pr.	Parameter Name	Setting Range	Default
		5: EMC-D42A 6: EMC-R6AA 11: EMC-A22A	
02-71	DFM output selection	0: Use frequency with speed control as DFM output frequency 1: Use frequency with system acceleration / deceleration as DFM output frequency	0
02-74	Internal / external multi-function input terminal selection	0000–FFFFh	0000h
02-75	Internal multi-function output terminal selection	0000–FFFFh	0000h

03 Analog Input / Output Parameters

	Pr.	Parameter Name	Setting Range	Default
✓	03-00	AVI analog input selection	0: No function 1: Frequency command (speed limit under torque control mode) 2: Torque command (torque limit under speed control mode) 3: Torque compensation command 4: PID target value 5: PID feedback signal 6: Thermistor (PTC / KTY-84) input value 7: Positive torque limit 8: Negative torque limit 9: Regenerative torque limit 10: Positive / negative torque limit 11: PT100 thermistor input value 13: PID compensation value	1
✓	03-01	ACI analog input selection		0
✓	03-02	AUI Analog input selection		0
✓	03-03	AVI analog input bias	-100.0–100.0%	0.0
✓	03-04	ACI analog input bias	-100.0–100.0%	0.0
✓	03-05	AUI analog input bias	-100.0–100.0%	0.0
✓	03-07	AVI positive / negative bias mode	0: No bias 1: Lower than or equal to bias 2: Greater than or equal to bias 3: The absolute value of the bias voltage while serving as the center 4: Bias serves as the center	0
✓	03-08	ACI positive / negative bias mode		
✓	03-09	AUI positive / negative bias mode		
	03-10	Reverse setting when analog signal input is negative frequency	0: Negative frequency input is not allowed. The digital keypad or external terminal controls the forward and reverse direction. 1: Negative frequency is **allowed**. Positive frequency = run in a forward direction; Negative frequency = run in a reverse direction. The digital keypad or external terminal control cannot change the running direction.	0
✓	03-11	AVI analog input gain	-500.0–500.0%	100.0
✓	03-12	ACI analog input gain	-500.0–500.0%	100.0
✓	03-13	AUI analog positive input gain	-500.0–500.0%	100.0
✓	03-14	AUI analog negative input gain	-500.0–500.0%	100.0
✓	03-15	AVI analog input filter time	0.00–20.00 sec.	0.01
✓	03-16	ACI analog input filter time	0.00–20.00 sec.	0.01

	Pr.	Parameter Name	Setting Range	Default
✓	03-17	AUI analog input filter time	0.00–20.00 sec.	0.01
✓	03-18	Analog input addition function	0: Disable (AVI, ACI, AUI) 1: Enable	0
	03-19	Signal loss selection for the analog input 4–20 mA	0: Disable 1: Continue operation at the last frequency 2: Decelerate to 0 Hz 3: Stop immediately and display ACE	0
✓	03-20	AFM1 Multi-function output 1	0: Output frequency (Hz) 1: Frequency command (Hz) 2: Motor speed (Hz) 3: Output current (rms) 4: Output voltage 5: DC bus voltage 6: Power factor 7: Power 8: Output torque 9: AVI 10: ACI 11: AUI 12: Iq current command 13: Iq feedback value 14: Id current command 15: Id feedback value 18: Torque command 19: PG2 frequency command 20: CANopen analog output 21: RS-485 analog output 22: Communication card analog output 23: Constant voltage output 25: CANopen and RS-485 analog output	0
✓	03-23	AFM2 Multi-function output 2		0
✓	03-21	AFM1 Analog output gain 1	0.0–500.0%	100.0
✓	03-22	AFM1 Analog output 1 in REV direction	0: Absolute value in output voltage 1: Reverse output 0 V; forward output 0–10 V 2: Reverse output 5–0 V; forward output 5–10 V	0
✓	03-24	AFM2 Analog output gain 2	0.0–500.0%	100.0
✓	03-25	AFM2 Analog output 2 in REV direction	0: Absolute value in output voltage 1: Reverse output 0 V; forward output 0–10 V 2: Reverse output 5–0 V; forward output 5–10 V	0
✓	03-27	AFM2 output bias	-100.00–100.00%	0.00
✓	03-28	AVI terminal input selection	0: 0–10 V 1: 0–20 mA 2: 4–20 mA	0

	Pr.	Parameter Name	Setting Range	Default
✓	03-29	ACI terminal input selection	0: 4–20 mA 1: 0–10 V 2: 0–20 mA	0
	03-30	PLC analog output terminal status	Monitor the status of the PLC analog output terminals	Read only
✓	03-31	AFM2 output selection	0: 0–20 mA output 1: 4–20 mA output	0
✓	03-32	AFM1 DC output setting level	0.00–100.00%	0.00
✓	03-33	AFM2 DC output setting level	0.00–100.00%	0.00
✓	03-35	AFM1 output filter time	0.00–20.00 sec.	0.01
✓	03-36	AFM2 output filter time	0.00–20.00 sec.	0.01
✓	03-44	Multi-function output (MO) by AI level source	0: AVI 1: ACI 2: AUI	0
✓	03-45	AI upper level (MO)	-100.00–100.00%	50.00
✓	03-46	AI lower level (MO)	-100.00–100.00%	10.00
✓	03-50	Analog input curve selection	0: Normal curve 1: Three-point curve of AVI 2: Three-point curve of ACI 3: Three-point curve of AVI & ACI 4: Three-point curve of AUI 5: Three-point curve of AVI & AUI 6: Three-point curve of ACI & AUI 7: Three-point curve of AVI & ACI & AUI	0
✓	03-51	AVI lowest point	Pr.03-28=0, 0.00–10.00 V Pr.03-28=1, 0.00–20.00 mA Pr.03-28=2, 4.00–20.00 mA	0.00 0.00 4.00
✓	03-52	AVI proportional lowest point	-100.00–100.00%	0.00
✓	03-53	AVI mid-point	Pr.03-28=0, 0.00–10.00 V Pr.03-28=1, 0.00–20.00 mA Pr.03-28=2, 4.00–20.00 mA	5.00 10.00 12.00
✓	03-54	AVI proportional mid-point	-100.00–100.00%	50.00
✓	03-55	AVI highest point	Pr.03-28=0, 0.00–10.00 V Pr.03-28=1, 0.00–20.00 mA Pr.03-28=2, 4.00–20.00 mA	10.00 20.00 20.00
✓	03-56	AVI proportional highest point	-100.00–100.00%	100.00
✓	03-57	ACI lowest point	Pr.03-29=0, 4.00–20.00 mA Pr.03-29=1, 0.00–10.00 V Pr.03-29=2, 0.00–20.00 mA	4.00 0.00 0.00
✓	03-58	ACI proportional lowest point	-100.00–100.00%	0.00

	Pr.	Parameter Name	Setting Range	Default
✓	03-59	ACI mid-point	Pr.03-29=0, 4.00–20.00 mA Pr.03-29=1, 0.00–10.00 V Pr.03-29=2, 0.00–20.00 mA	12.00 5.00 10.00
✓	03-60	ACI proportional mid-point	-100.00–100.00%	50.00
✓	03-61	ACI highest point	Pr.03-29=0, 4.00–20.00 mA Pr.03-29=1, 0.00–10.00 V Pr.03-29=2, 0.00–20.00 mA	20.00 10.00 20.00
✓	03-62	ACI proportional highest point	-100.00–100.00%	100.00
✓	03-63	Positive AUI voltage lowest point	0.00–10.00 V	0.00
✓	03-64	Positive AUI voltage proportional lowest point	-100.00–100.00%	0.00
✓	03-65	Positive AUI voltage mid-point	0.00–10.00 V	5.00
✓	03-66	Positive AUI voltage proportional mid-point	-100.00–100.00%	50.00
✓	03-67	Positive AUI voltage highest point	0.00–10.00 V	10.00
✓	03-68	Positive AUI voltage proportional highest point	-100.00–100.00%	100.00
✓	03-69	Negative AUI voltage highest point	-10.00–0.00 V	0.00
✓	03-70	Negative AUI voltage proportional highest point	-100.00–100.00%	0.00
✓	03-71	Negative AUI voltage mid-point	-10.00–0.00 V	-5.00
✓	03-72	Negative AUI voltage proportional mid-point	-100.00–100.00%	-50.00
✓	03-73	Negative AUI voltage lowest point	-10.00–0.00 V	-10.00
✓	03-74	Negative AUI voltage proportional lowest point	-100.00–100.00%	-100.00

04 Multi-step Speed Parameters

	Pr.	Parameter Name	Setting Range	Default
✓	04-00	1st step speed frequency	0.00–599.00 Hz	0.00
✓	04-01	2nd step speed frequency	0.00–599.00Hz	0.00
✓	04-02	3rd step speed frequency	0.00–599.00 Hz	0.00
✓	04-03	4th step speed frequency	0.00–599.00 Hz	0.00
✓	04-04	5th step speed frequency	0.00–599.00 Hz	0.00
✓	04-05	6th step speed frequency	0.00–599.00 Hz	0.00
✓	04-06	7th step speed frequency	0.00–599.00 Hz	0.00
✓	04-07	8th step speed frequency	0.00–599.00 Hz	0.00
✓	04-08	9th step speed frequency	0.00–599.00 Hz	0.00
✓	04-09	10th step speed frequency	0.00–599.00 Hz	0.00
✓	04-10	11th step speed frequency	0.00–599.00 Hz	0.00
✓	04-11	12th step speed frequency	0.00–599.00 Hz	0.00
✓	04-12	13th step speed frequency	0.00–599.00 Hz	0.00
✓	04-13	14th step speed frequency	0.00–599.00 Hz	0.00
✓	04-14	15th step speed frequency	0.00–599.00 Hz	0.00
✓	04-15	Position command 1 (rotation)	-30000–30000	0
✓	04-16	Position command 1 (pulse)	-32767–32767	0
✓	04-17	Position command 2 (rotation)	-30000–30000	0
✓	04-18	Position command 2 (pulse)	-32767–32767	0
✓	04-19	Position command 3 (rotation)	-30000–30000	0
✓	04-20	Position command 3 (pulse)	-32767–32767	0
✓	04-21	Position command 4 (rotation)	-30000–30000	0
✓	04-22	Position command 4 (pulse)	-32767–32767	0
✓	04-23	Position command 5 (rotation)	-30000–30000	0
✓	04-24	Position command 5 (pulse)	-32767–32767	0
✓	04-25	Position command 6 (rotation)	-30000–30000	0
✓	04-26	Position command 6 (pulse)	-32767–32767	0
✓	04-27	Position command 7 (rotation)	-30000–30000	0
✓	04-28	Position command 7 (pulse)	-32767–32767	0
✓	04-29	Position command 8 (rotation)	-30000–30000	0
✓	04-30	Position command 8 (pulse)	-32767–32767	0
✓	04-31	Position command 9 (rotation)	-30000–30000	0
✓	04-32	Position command 9 (pulse)	-32767–32767	0
✓	04-33	Position command 10 (rotation)	-30000–30000	0
✓	04-34	Position command 10 (pulse)	-32767–32767	0
✓	04-35	Position command 11 (rotation)	-30000–30000	0
✓	04-36	Position command 11 (pulse)	-32767–32767	0

	Pr.	Parameter Name	Setting Range	Default
✓	04-37	Position command 12 (rotation)	-30000–30000	0
✓	04-38	Position command 12 (pulse)	-32767–32767	0
✓	04-39	Position command 13 (rotation)	-30000–30000	0
✓	04-40	Position command 13 (pulse)	-32767–32767	0
✓	04-41	Position command 14 (rotation)	-30000–30000	0
✓	04-42	Position command 14 (pulse)	-32767–32767	0
✓	04-43	Position command 15 (rotation)	-30000–30000	0
✓	04-44	Position command 15 (pulse)	-32767–32767	0
✓	04-50	PLC buffer 0	0–65535	0
✓	04-51	PLC buffer 1	0–65535	0
✓	04-52	PLC buffer 2	0–65535	0
✓	04-53	PLC buffer 3	0–65535	0
✓	04-54	PLC buffer 4	0–65535	0
✓	04-55	PLC buffer 5	0–65535	0
✓	04-56	PLC buffer 6	0–65535	0
✓	04-57	PLC buffer 7	0–65535	0
✓	04-58	PLC buffer 8	0–65535	0
✓	04-59	PLC buffer 9	0–65535	0
✓	04-60	PLC buffer 10	0–65535	0
✓	04-61	PLC buffer 11	0–65535	0
✓	04-62	PLC buffer 12	0–65535	0
✓	04-63	PLC buffer 13	0–65535	0
✓	04-64	PLC buffer 14	0–65535	0
✓	04-65	PLC buffer 15	0–65535	0
✓	04-66	PLC buffer 16	0–65535	0
✓	04-67	PLC buffer 17	0–65535	0
✓	04-68	PLC buffer 18	0–65535	0
✓	04-69	PLC buffer 19	0–65535	0
✓	04-70	PLC Application parameter 0	0–65535	0
✓	04-71	PLC Application parameter 1	0–65535	0
✓	04-72	PLC Application parameter 2	0–65535	0
✓	04-73	PLC Application parameter 3	0–65535	0
✓	04-74	PLC Application parameter 4	0–65535	0
✓	04-75	PLC Application parameter 5	0–65535	0
✓	04-76	PLC Application parameter 6	0–65535	0
✓	04-77	PLC Application parameter 7	0–65535	0
✓	04-78	PLC Application parameter 8	0–65535	0
✓	04-79	PLC Application parameter 9	0–65535	0
✓	04-80	PLC Application parameter 10	0–65535	0

	Pr.	Parameter Name	Setting Range	Default
✓	04-81	PLC Application parameter 11	0–65535	0
✓	04-82	PLC Application parameter 12	0–65535	0
✓	04-83	PLC Application parameter 13	0–65535	0
✓	04-84	PLC Application parameter 14	0–65535	0
✓	04-85	PLC Application parameter 15	0–65535	0
✓	04-86	PLC Application parameter 16	0–65535	0
✓	04-87	PLC Application parameter 17	0–65535	0
✓	04-88	PLC Application parameter 18	0–65535	0
✓	04-89	PLC Application parameter 19	0–65535	0
✓	04-90	PLC Application parameter 20	0–65535	0
✓	04-91	PLC Application parameter 21	0–65535	0
✓	04-92	PLC Application parameter 22	0–65535	0
✓	04-93	PLC Application parameter 23	0–65535	0
✓	04-94	PLC Application parameter 24	0–65535	0
✓	04-95	PLC Application parameter 25	0–65535	0
✓	04-96	PLC Application parameter 26	0–65535	0
✓	04-97	PLC Application parameter 27	0–65535	0
✓	04-98	PLC Application parameter 28	0–65535	0
✓	04-99	PLC Application parameter 29	0–65535	0

05 Motor Parameters

	Pr.	Parameter Name	Setting Range	Default
	05-00	Motor parameter auto-tuning	0: No function 1: Simple rolling auto-tuning for induction motor (IM) 2: Static auto-tuning for induction motor (IM) 4: Dynamic test for PM magnetic pole (with the running in forward direction) 5: Rolling auto-tuning for PM (IPM / SPM) 6: Advanced rolling auto-tuning for IM motor flux curve 11: SynRM parameter auto-tuning 12: FOC sensorless inertia estimation 13: Static auto-tuning for PM	0
	05-01	Full-load current for induction motor 1 (A)	Depending on the model power	Depending on the model power
✓	05-02	Rated power for induction motor 1 (kW)	0.00–655.35 kW	Depending on the model power
✓	05-03	Rated speed for induction motor 1 (rpm)	0–xxxx rpm (Depending on the motor's number of poles)	Depending on the motor's number of poles
	05-04	Number of poles for induction motor 1	2–64	4
	05-05	No-load current for induction motor 1 (A)	0.00–Pr.05-01 default	Depending on the model power
	05-06	Stator resistance (Rs) for induction motor 1	0.000–65.535 Ω	Depending on the model power
	05-07	Rotor resistance (Rr) for induction motor 1	0.000–65.535 Ω	0.000
	05-08	Magnetizing inductance (Lm) for induction motor 1	0.0–6553.5 mH	0.0
	05-09	Stator inductance (Lx) for induction motor 1	0.0–6553.5 mH	0.0
	05-13	Full-load current for induction motor 2 (A)	Depending on the model power	Depending on the model power
✓	05-14	Rated power for induction motor 2 (kW)	0.00–655.35 kW	Depending on the model power
✓	05-15	Rated speed for induction motor 2 (rpm)	0–xxxx rpm (Depending on the motor's number of poles)	Depending on the motor's number of poles
	05-16	Number of poles for induction motor 2	2–64	4

	Pr.	Parameter Name	Setting Range	Default
	05-17	No-load current for induction motor 2 (A)	0.00–Pr.05-13 default	Depending on the model power
	05-18	Stator resistance (Rs) for induction motor 2	0.000–65.535 Ω	Depending on the model power
	05-19	Rotor resistance (Rr) for induction motor 2	0.000–65.535 Ω	0.000
	05-20	Magnetizing inductance (Lm) for induction motor 2	0.0–6553.5 mH	0.0
	05-21	Stator inductance (Lx) for induction motor 2	0.0–6553.5 mH	0.0
	05-22	Induction motor 1 / 2 selection	1: Motor 1 2: Motor 2	1
✓	05-23	Frequency for Y-connection / Δ-connection switch for an induction motor	0.00–599.00 Hz	60.00
	05-24	Y-connection / Δ-connection switch for an induction motor	0: Disable 1: Enable	0
✓	05-25	Delay time for Y-connection / Δ-connection switch for an induction motor	0.000–60.000 sec.	0.200
	05-28	Accumulated Watt-hour for a motor (W-hour)	0.0–6553.5	Read only
	05-29	Accumulated Watt-hour for a motor in low word (kW-hour)	0.0–6553.5	Read only
	05-30	Accumulated Watt-hour for a motor in high word (MW-hour)	0–65535	Read only
	05-31	Accumulated motor operation time (minutes)	0–1439	0
	05-32	Accumulated motor operation time (days)	0–65535	0
	05-33	Induction motor (IM) or permanent magnet synchronous AC motor (PM) selection	0: IM 1: SPM 2: IPM 3: SynRM	0
	05-34	Full-load current for a permanent magnet synchronous AC motor / reluctance motor	Depending on the model power	Depending on the model power
✓	05-35	Rated power for a permanent magnet synchronous AC motor / reluctance motor	0.00–655.35 kW	Depending on the model power

	Pr.	Parameter Name	Setting Range	Default
✓	05-36	Rated speed for a permanent magnet synchronous AC motor / reluctance motor	0–65535 rpm	2000
	05-37	Number of poles for a permanent magnet synchronous AC motor / reluctance motor	0–65535	10
	05-38	System inertia for a permanent magnet synchronous AC motor / reluctance motor	0.0–6553.5 kg-cm^2	Depending on the motor power
	05-39	Stator resistance for a permanent magnet synchronous AC motor / reluctance motor	0.000–65.535 Ω	0.000
	05-40	Permanent magnet synchronous AC motor / reluctance motor Ld	0.00–655.35 mH	0.00
	05-41	Permanent magnet synchronous AC motor / reluctance motor Lq	0.00–655.35 mH	0.00
✓	05-42	PG offset angle for a permanent magnet synchronous AC motor / reluctance motor	0.0–360.0°	0.0
✓	05-43	Ke parameter of a permanent magnet synchronous AC motor / reluctance motor	0–65535 (Unit: V / krpm)	0

06 Protection Parameters

	Pr.	Parameter Name	Setting Range	Default
✓	06-00	Low voltage level	230V models: Frame A–D: 150.0–220.0 V_{DC} Frame E and above: 190.0–220.0 V_{DC} 460V models: Frame A–D: 300.0–440.0 V_{DC} Frame E and above: 380.0–440.0 V_{DC} 575V models: 420.0–520.0 V_{DC} 690V models: 450.0–660.0 V_{DC}	 180.0 200.0 360.0 400.0 470.0 480.0
✓	06-01	Over-voltage stall prevention	0: Disabled 230V models: 0.0–450.0 V_{DC} 460V models: 0.0–900.0 V_{DC} 575V models: 0.0–920.0 V_{DC} 690V models: 0.0–1087.0 V_{DC}	 380.0 760.0 920.0 1087.0
✓	06-02	Selection for over-voltage stall prevention	0: Traditional over-voltage stall prevention 1: Smart over-voltage stall prevention	0
✓	06-03	Over-current stall prevention during acceleration	230V / 460V models Heavy load: 0–195% (100% corresponds to the rated current of the drive) Super Heavy load: 0–210% (100% corresponds to the rated current of the drive) 575V / 690V models Light load: 0–125% (100% corresponds to the rated current of the drive) Normal load: 0–150% (100% corresponds to the rated current of the drive) Heavy load: 0–180% (100% corresponds to the rated current of the drive)	 150 150 120 120 150
✓	06-04	Over-current stall prevention during operation	230V / 460V models Heavy load: 0–195% (100% corresponds to the rated current of the drive) Super Heavy load: 0–210% (100% corresponds to the rated current of the drive) 575V / 690V models Light load: 0–125% (100% corresponds to the rated current of the drive) Normal load: 0–150% (100% corresponds to the rated current of the drive) Heavy load: 0–180% (100% corresponds to the rated current of the drive)	 150 150 120 120 150

	Pr.	Parameter Name	Setting Range	Default
✓	06-05	Acceleration / deceleration time selection for stall prevention at constant speed	0: By current acceleration / deceleration time 1: By the first acceleration / deceleration time 2: By the second acceleration / deceleration time 3: By the third acceleration / deceleration time 4: By the fourth acceleration / deceleration time 5: By Auto-acceleration / auto-deceleration	0
✓	06-06	Over-torque detection selection (OT1)	0: No function 1: Continue operation after over-torque detection during constant speed operation 2: Stop after over-torque detection during constant speed operation 3: Continue operation after over-torque detection during RUN 4: Stop after over-torque detection during RUN	0
✓	06-07	Over-torque detection level (OT1)	10–250% (100% corresponds to the rated current of the drive)	120
✓	06-08	Over-torque detection time (OT1)	0.0–60.0 sec.	0.1
✓	06-09	Over-torque detection selection (OT2)	0: No function 1: Continue operation after over-torque detection during constant speed operation 2: Stop after over-torque detection during constant speed operation 3: Continue operation after over-torque detection during RUN 4: Stop after Over-torque detection during RUN	0
✓	06-10	Over-torque detection level (OT2)	10–250% (100% corresponds to the rated current of the drive)	120
✓	06-11	Over-torque detection time (OT2)	0.0–60.0 sec.	0.1
	06-12	Current limit	230V / 460V models: 0–195% (100% corresponds to the rated current of the drive) 575V / 690V models: 0–250% (100% corresponds to the rated current of the drive)	190 170
✓	06-13	Electronic thermal relay selection 1 (motor 1)	0: Inverter motor (with external forced cooling) 1: Standard motor (motor with fan on the shaft) 2: Disable	2
✓	06-14	Electronic thermal relay action time 1 (motor 1)	30.0–600.0 sec.	60.0
✓	06-15	Temperature level overheat (OH) warning	0.0–110.0°C	105.0

	Pr.	Parameter Name	Setting Range	Default
✓	06-16	Stall prevention limit level (Weak magnetic field current stall prevention level)	230V / 460V models: 0–100% (refer to Pr.06-03) 575V / 690V models: 0–100% (refer to Pr.06-03)	100 50
	06-17	Fault record 1	0: No fault record 1: Over-current during acceleration (ocA) 2: Over-current during deceleration (ocd) 3: Over-current during steady operation (ocn) 4: Ground fault (GFF) 5: IGBT short-circuit between upper bridge and lower bridge (occ) 6: Over-current at stop (ocS) 7: Over-voltage during acceleration (ovA) 8: Over-voltage during deceleration (ovd) 9: Over-voltage at constant speed (ovn) 10: Over-voltage at stop (ovS) 11: Low-voltage during acceleration (LvA) 12: Low-voltage during deceleration (Lvd) 13: Low-voltage at constant speed (Lvn) 14: Low-voltage at stop (LvS) 15: Phase loss protection (OrP) 16: IGBT overheating (oH1) 17: Heatsink overheating (oH2) 18: IGBT temperature detection failure (tH1o) 19: Capacitor hardware error (tH2o) 21: Over load (oL) 22: Electronic thermal relay 1 protection (EoL1) 23: Electronic thermal relay 2 protection (EoL2) 24: Motor overheating (oH3) (PTC / PT100) 26: Over torque 1 (ot1) 27: Over torque 2 (ot2) 28: Under current (uC) 29: Limit error (LiT) 30: EEPROM write error (cF1) 31: EEPROM read error (cF2) 33: U-phase error (cd1) 34: V-phase error (cd2) 35: W-phase error (cd3) 36: cc (current clamp) hardware error (Hd0) 37: oc (over-current) hardware error (Hd1) 38: ov (over-voltage) hardware error (Hd2)	0
	06-18	Fault record 2		0
	06-19	Fault record 3		0
	06-20	Fault record 4		0
	06-21	Fault record 5		0
	06-22	Fault record 6		0

Pr.	Parameter Name	Setting Range	Default
		39: occ hardware error (Hd3) 40: Auto-tuning error (AUE) 41: PID loss ACI (AFE) 42: PG feedback error (PGF1) 43: PG feedback loss (PGF2) 44: PG feedback stall (PGF3) 45: PG slip error (PGF4) 48: ACI loss (ACE) 49: External fault (EF) 50: Emergency stop (EF1) 51: External base block (bb) 52: Enter wrong password three times and locked (Pcod) 53: SW code error (ccod) 54: Illegal command (CE1) 55: Illegal data address (CE2) 56: Illegal data value (CE3) 57: Data is written to read-only address (CE4) 58: Modbus transmission time-out (CE10) 60: Brake transistor error (bF) 61: Y-connection / Δ-connection switch error (ydc) 62: Deceleration energy backup error (dEb) 63: Over slip error (oSL) 64: Electric valve switch error (ryF) 65: Hardware error of PG card (PGF5) 68: Reverse direction of the speed feedback (SdRv) 69: Over speed rotation feedback (SdOr) 70: Large deviation of speed feedback (SdDe) 71: Watchdog (WDTT) (applied to 230V / 460V models) 72: STO loss 1 (STL1) 73: Emergency stop for external safety (S1) 75: External brake error (Brk) (applied to 230V / 460V models) 76: Safe torque off (STO) 77: STO loss 2 (STL2) 78: STO loss 3 (STL3) 82: Output phase loss U phase (OPHL) 83: Output phase loss V phase (OPHL) 84: Output phase loss W phase (OPHL) 85: PG ABZ line off (AboF) (PG-02U)	

	Pr.	Parameter Name	Setting Range	Default
			86: PG UVW line off (UvoF) (PG-02U) 87: Overload protection at low frequency (oL3) 89: Rotor position detection error (RoPd) 90: Force to stop (FStp) 92: Pulse tuning Ld / Lq error (LEr) 93: CPU error 0 (TRAP) (Applied to 230V / 460V models) 101: CANopen guarding error (CGdE) 102: CANopen heartbeat error (CHbE) 104: CANopen bus off error (CbFE) 105: CANopen index error (CidE) 106: CANopen station address error (CAdE) 107: CANopen memory error (CFrE) 111: InrCOM time-out error (ictE) 112: PM sensorless shaft lock error (SfLK) 142: Auto-tune error 1 (no feedback current error) (AUE1) (applied to 230V / 460V models) 143: Auto-tune error 2 (motor phase loss error) (AUE2) (applied to 230V / 460V models) 144: Auto-tune error 3 (no-load current I_0 measuring error) (AUE3) (applied to 230V / 460V models) 148: Auto-tune error 4 (leakage inductance Lsigma measuring error) (AUE4) (applied to 230V / 460V models) 171: Over position error (oPEE)	
✓	06-23	Fault output option 1	0–65535 (refer to bit table for fault code)	0
✓	06-24	Fault output option 2	0–65535 (refer to bit table for fault code)	0
✓	06-25	Fault output option 3	0–65535 (refer to bit table for fault code)	0
✓	06-26	Fault output option 4	0–65535 (refer to bit table for fault code)	0
✓	06-27	Electronic thermal relay selection 2 (motor 2)	0: Inverter motor (with external forced cooling) 1: Standard motor (motor with fan on the shaft) 2: Disable	2
✓	06-28	Electronic thermal relay action time 2 (motor 2)	30.0–600.0 sec.	60.0
✓	06-29	PTC detection selection / PT100 motion	0: Warn and continue operation 1: Fault and ramp to stop 2: Fault and coast to stop 3: No warning	0
✓	06-30	PTC level / KTY84 Level	0.0–100.0%	50.0
	06-31	Frequency command at malfunction	0.00–599.00 Hz	Read only

	Pr.	Parameter Name	Setting Range	Default
	06-32	Output frequency at malfunction	0.00–599.00 Hz	Read only
	06-33	Output voltage at malfunction	0.0–6553.5 V	Read only
	06-34	DC bus voltage at malfunction	0.0–6553.5 V	Read only
	06-35	Output current at malfunction	0.0–6553.5 Amp	Read only
	06-36	IGBT temperature at malfunction	-3276.7–3276.7°C	Read only
	06-37	Capacitance temperature at malfunction	-3276.7–3276.7°C	Read only
	06-38	Motor speed at malfunction	-32767–32767 rpm	Read only
	06-39	Torque command at malfunction	-32767–32767%	Read only
	06-40	Status of the multi-function input terminal at malfunction	0000h–FFFFh	Read only
	06-41	Status of the multi-function output terminal at malfunction	0000h–FFFFh	Read only
	06-42	Drive status at malfunction	0000h–FFFFh	Read only
✓	06-44	STO latch selection	0: STO latch 1: STO no latch	0
✓	06-45	Output phase loss detection action (OPHL)	0: Warn and continue operation 1: Fault and ramp to stop 2: Fault and coast to stop 3: No warning	3
✓	06-46	Detection time for output phase loss	230V / 460V models: 0.000–65.535 sec. 575V / 690V models: 0.000–65.535 sec.	3.000 0.500
✓	06-47	Current detection level for output phase loss	0.00–100.00%	1.00
✓	06-48	DC brake time for output phase loss	0.000–65.535 sec.	0.000
✓	06-49	LvX auto-reset	0: Disable 1: Enable	0
✓	06-50	Time for input phase loss detection	0.00–600.00 sec.	0.20
	06-51	Capacitance oH warning level (applied to 230V / 460V models)	0.0–110.0 degree	Depending on the model power

	Pr.	Parameter Name	Setting Range	Default
✓	06-52	Ripple of input phase loss	230V models: 0.0–160.0 V_{DC} 460V models: 0.0–320.0 V_{DC} 575V models: 0.0–400.0 V_{DC} 690V models: 0.0–480.0 V_{DC}	30.0 60.0 75.0 90.0
✓	06-53	Input phase loss detection action (OrP)	0: Fault and ramp to stop 1: Fault and coast to stop	0
✓	06-55	Derating protection	0: Auto-decrease carrier frequency and limit output current 1: Constant carrier frequency and limit output current 2: Auto-decrease carrier frequency	0
✓	06-56	PT100 voltage level 1	0.000–10.000 V	5.000
✓	06-57	PT100 voltage level 2	0.000–10.000 V	7.000
✓	06-58	PT100 level 1 frequency protection	0.00–599.00 Hz	0.00
✓	06-59	PT100 activation level 1 protection frequency delay time	0–6000 sec.	60
✓	06-60	Software detection GFF current level	0.0–200.0%	60.0
✓	06-61	Software detection GFF filter time	0.00–655.35 sec.	0.10
	06-62	dEb reset bias level (applied to 230V / 460V models)	230V models: 0.0–100 V_{DC} 460V models: 0.0–200.0 V_{DC}	20.0 40.0
	06-63	Operation time of fault record 1 (Days)	0–65535 days	Read only
	06-64	Operation time of fault record 1 (Minutes)	0–1439 min.	Read only
	06-65	Operation time of fault record 2 (Days)	0–65535 days	Read only
	06-66	Operation time of fault record 2 (Minutes)	0–1439 min.	Read only
	06-67	Operation time of fault record 3 (Days)	0–65535 days	Read only
	06-68	Operation time of fault record 3 (Minutes)	0–1439 min.	Read only
	06-69	Operation time of fault record 4 (Days)	0–65535 days	Read only
	06-70	Operation time of fault record 4 (Minutes)	0–1439 min.	Read only
✓	06-71	Low current setting level	0.0–100.0%	0.0
✓	06-72	Low current detection time	0.00–360.00 sec.	0.00
✓	06-73	Low current action	0: No function 1: Fault and coast to stop	0

Pr.	Parameter Name	Setting Range	Default
		2: Fault and ramp to stop by the second deceleration time 3: Warn and continue operation	
06-86	PTC Type (applied to 230V / 460V models)	0–1 0: PTC 1: KTY84-130	0

07 Special Parameters

	Pr.	Parameter Name	Setting Range	Default
✓	07-00	Software brake chopper action level	230V models: 350.0–450.0 V_{DC} 460V models: 700.0–900.0 V_{DC} 575V models: 850.0–1116.0 V_{DC} 690V models: 939.0–1318.0 V_{DC}	370.0 740.0 895.0 1057.0
✓	07-01	DC brake current level	0–100%	0
✓	07-02	DC brake time at start-up	0.0–60.0 sec.	0.0
✓	07-03	DC brake time at STOP	0.0–60.0 sec.	0.0
✓	07-04	DC brake frequency at STOP	0.00–599.00 Hz	0.00
✓	07-05	Voltage increasing gain	1–200%	100
✓	07-06	Restart after momentary power loss	0: Stop operation 1: Speed tracking by the speed before the power loss 2: Speed tracking by the minimum output frequency	0
✓	07-07	Allowed power loss duration	0.0–20.0 sec.	2.0
✓	07-08	Base block time	0.0–5.0 sec.	Depending on the model power
✓	07-09	Current limit of speed tracking	20–200%	100
✓	07-10	Restart after fault action	0: Stop operation 1: Speed tracking by current speed 2: Speed tracking by minimum output frequency	0
✓	07-11	Number of times of restart after fault	0–10	0
✓	07-12	Speed tracking during start-up	0: Disable 1: Speed tracking by the maximum output frequency 2: Speed tracking by the motor frequency at start-up 3: Speed tracking by the minimum output frequency	0
✓	07-13	dEb function selection	0: Disable 1: dEb with auto-acceleration / auto-deceleration, the drive does not output the frequency after the power is restored. 2: dEb with auto-acceleration / auto-deceleration, the drive outputs the frequency after the power is restored 3: dEb low-voltage control, then the drive's voltage increases to 350 V_{DC} / 700 V_{DC} and ramps to stop after low frequency 4: dEb high-voltage control of 350 V_{DC} / 700 V_{DC}, and the drive ramps to stop	0
	07-14	dEb function reset time	0.0–25.0 sec.	3.0
✓	07-15	Dwell time at acceleration	0.00–600.00 sec.	0.00
✓	07-16	Dwell frequency at acceleration	0.00–599.00 Hz	0.00
✓	07-17	Dwell time at deceleration	0.00–600.00 sec.	0.00

	Pr.	Parameter Name	Setting Range	Default
✓	07-18	Dwell frequency at deceleration	0.00–599.00 Hz	0.00
✓	07-19	Fan cooling control	0: Fan always ON 1: Fan is OFF after the AC motor drive stops for one minute 2: Fan is ON when the AC motor drive runs; fan is OFF when the AC motor drive stops. 3: Fan turns ON when temperature (IGBT) reaches around 60°C. 4: Fan always OFF	0
✓	07-20	Emergency stop (EF) & force to stop selection	0: Coast to stop 1: Stop by the first deceleration time 2: Stop by the second deceleration time 3: Stop by the third deceleration time 4: Stop by the fourth deceleration time 5: System deceleration 6: Automatic deceleration	0
✓	07-21	Automatic energy-saving selection	0: Disabled 1: Power factor energy-saving improvement (for VF, SVC and VFPG control modes) 2: Automatic energy-saving (AES) optimization (for VF, SVC and VFPG control modes)	0
✓	07-22	Energy-saving gain	10–1000%	100
✓	07-23	Automatic voltage regulation (AVR) function	0: Enable AVR 1: Disable AVR 2: Disable AVR during deceleration	0
✓	07-24	Torque command filter time (V/F and SVC control mode)	0.001–10.000 sec.	0.500
✓	07-25	Slip compensation filter time (V/F and SVC control mode)	0.001–10.000 sec.	0.100
✓	07-26	Torque compensation gain	IM: 0–10 (when Pr.05-33 = 0) PM: 0–5000 (when Pr.05-33 = 1 or 2)	0
✓	07-27	Slip compensation gain	0.00–10.00	0.00 (Default value is 1.00 in SVC mode)
✓	07-29	Slip deviation level	0.0–100.0% 0: No detection	0.0
✓	07-30	Over-slip deviation detection time	0.0–10.0 sec.	1.0
✓	07-31	Over-slip deviation treatment	0: Warn and continue operation 1: Fault and ramp to stop 2: Fault and coast to stop 3: No warning	0

	Pr.	Parameter Name	Setting Range	Default
✓	07-32	Motor oscillation compensation factor	0–10000 0: Disable	1000
✓	07-33	Auto-restart interval of fault	0.0–6000.0 sec.	60.0
	07-38	PMSVC voltage feed forward gain	0.00–2.00	1.00
✓	07-41	Minimum frequency for AES	0.00–40.00 Hz	10.00
	07-42	Delay time for AES	0–600 sec.	5
✓	07-43	Targeted power factor angle for AES	0.00–65.00°	40.00
✓	07-44	Maximum voltage drop for AES	0.00–70.00%	60.00
✓	07-45	AES coefficient	0–10000%	100
	07-62	dEb gain (Kp)	0–65535	8000
	07-63	dEb gain (Ki)	0–65535	150

08 High-function PID Parameters

	Pr.	Parameter Name	Setting Range	Default
✓	08-00	Terminal selection of PID feedback	0: No function 1: Negative PID feedback: by analog input (Pr.03-00–03-02) 2: Negative PID feedback: by PG card pulse input, without direction (Pr.10-02) 3: Negative PID feedback:by PG card pulse input, with direction (Pr.10-02) 4: Positive PID feedback: by analog input (Pr.03-00–03-02) 5: Positive PID feedback: by PG card pulse input, without direction (Pr.10-02) 6: Positive PID feedback: by PG card pulse input, with direction (Pr.10-02) 7: Negative PID feedback: by communication protocols 8: Positive PID feedback: by communication protocols	0
✓	08-01	Proportional gain (P)	0.0–500.0	1.0
✓	08-02	Integral time (I)	0.00–100.00 sec. 0.0: No integral	1.00
✓	08-03	Differential time (D)	0.00–1.00 sec.	0.00
✓	08-04	Upper limit of integral control	0.0–100.0%	100.0
✓	08-05	PID output command limit	0.0–110.0%	100.0
✓	08-06	PID feedback value by communication protocol	-200.00–200.00%	Read only
✓	08-07	PID delay time	0.0–35.0 sec.	0.0
✓	08-08	Feedback signal detection time	0.0–3600.0 sec.	0.0
✓	08-09	Feedback signal fault treatment	0: Warn and continue operation 1: Fault and ramp to stop 2: Fault and coast to stop 3: Warn and operate at last frequency	0
✓	08-10	Sleep level	0.00–599.00 Hz / 0.00–200.00%	0.00
✓	08-11	Wake-up level	0.00–599.00 Hz / 0.00–200.00%	0.00
✓	08-12	Sleep delay time	0.0–6000.0 sec.	0.0
✓	08-13	PID feedback signal error deviation level	1.0–50.0%	10.0
✓	08-14	PID feedback signal error deviation detection time	0.1–300.0 sec.	5.0
✓	08-16	PID compensation selection	0: Parameter setting (Pr.08-17) 1: Analog input	0

	Pr.	Parameter Name	Setting Range	Default
✓	08-17	PID compensation	-100.0–100.0%	0.0
	08-18	Sleep mode function setting	0: Refer to PID output command 1: Refer to PID feedback signal	0
✓	08-19	Wake-up integral limit	0.0–200.0%	50.0
	08-20	PID mode selection	0: Serial connection 1: Parallel connection	0
	08-21	Enable PID to change the operation direction	0: Operation direction cannot be changed 1: Operation direction can be changed	0
✓	08-22	Wake-up delay time	0.00–600.00 sec.	0.00
✓	08-23	PID control flag	bit0 = 1, PID running in reverse follows the setting for Pr.00-23. bit0 = 0, PID running in reverse refer to PID's calculated value. bit1 = 1, two decimal places for PID Kp bit1 = 0, one decimal place for PID Kp	0000h

09 Communication Parameters

	Pr.	Parameter Name	Setting Range	Default
✓	09-00	Communication address	1–254	1
✓	09-01	COM1 transmission speed	4.8–115.2 Kbps	9.6
✓	09-02	COM1 transmission fault treatment	0: Warn and continue operation 1: Fault and ramp to stop 2: Fault and coast to stop 3: No warning, no fault and continue operation	3
✓	09-03	COM1 time-out detection	0.0–100.0 sec.	0.0
✓	09-04	COM1 communication protocol	1 : 7, N, 2 (ASCII) 2 : 7, E, 1 (ASCII) 3 : 7, O, 1 (ASCII) 4 : 7, E, 2 (ASCII) 5 : 7, O, 2 (ASCII) 6 : 8, N, 1 (ASCII) 7 : 8, N, 2 (ASCII) 8 : 8, E, 1 (ASCII) 9 : 8, O, 1 (ASCII) 10 : 8, E, 2 (ASCII) 11 : 8, O, 2 (ASCII) 12: 8, N, 1 (RTU) 13: 8, N, 2 (RTU) 14: 8, E, 1 (RTU) 15: 8, O, 1 (RTU) 16: 8, E, 2 (RTU) 17: 8, O, 2 (RTU)	1
✓	09-09	Communication response delay time	0.0–200.0 ms	2.0
	09-10	Communication main frequency	0.00–599.00 Hz	60.00
✓	09-11	Block transfer 1	0000–FFFFh	0000h
✓	09-12	Block transfer 2	0000–FFFFh	0000h
✓	09-13	Block transfer 3	0000–FFFFh	0000h
✓	09-14	Block transfer 4	0000–FFFFh	0000h
✓	09-15	Block transfer 5	0000–FFFFh	0000h
✓	09-16	Block transfer 6	0000–FFFFh	0000h
✓	09-17	Block transfer 7	0000–FFFFh	0000h
✓	09-18	Block transfer 8	0000–FFFFh	0000h
✓	09-19	Block transfer 9	0000–FFFFh	0000h
✓	09-20	Block transfer 10	0000–FFFFh	0000h
✓	09-21	Block transfer 11	0000–FFFFh	0000h
✓	09-22	Block transfer 12	0000–FFFFh	0000h

	Pr.	Parameter Name	Setting Range	Default
✓	09-23	Block transfer 13	0000–FFFFh	0000h
✓	09-24	Block transfer 14	0000–FFFFh	0000h
✓	09-25	Block transfer 15	0000–FFFFh	0000h
✓	09-26	Block transfer 16	0000–FFFFh	0000h
	09-30	Communication decoding method	0: Decoding method 1 (20xx) 1: Decoding method 2 (60xx)	1
	09-31	Internal communication protocol	0: Modbus 485 -1: Internal communication slave 1 -2: Internal communication slave 2 -3: Internal communication slave 3 -4: Internal communication slave 4 -5: Internal communication slave 5 -6: Internal communication slave 6 -7: Internal communication slave 7 -8: Internal communication slave 8 -10: Internal communication master -12: Internal PLC control	0
✓	09-33	PLC command force to 0	bit0: Before PLC scans, set up PLC target frequency=0 bit1: Before PLC scans, set up PLC target torque=0 bit2: Before PLC scans, set up the speed limit of torque control mode=0	0
	09-35	PLC address	1–254	2
	09-36	CANopen slave address	0: Disable 1–127	0
	09-37	CANopen speed	0: 1 Mbps 1: 500 Kbps 2: 250 Kbps 3: 125 Kbps 4: 100 Kbps (Delta only) 5: 50 Kbps	0
	09-39	CANopen warning record	bit0: CANopen guarding time out bit1: CANopen heartbeat time out bit2: CANopen SYNC time out bit3: CANopen SDO time out bit4: CANopen SDO buffer overflow bit5: Can bus off bit6: Error protocol of CANopen	Read only

Pr.	Parameter Name	Setting Range	Default
		bit8: The setting values of CANopen indexes are fail bit9: The setting value of CANopen address is fail bit10: The checksum value of CANopen indexes is fail	
09-40	CANopen decoding method	0: Disable (Delta-defined decoding method) 1: Enable (CANopen standard DS402 protocol)	1
09-41	CANopen communication status	0: Node reset state 1: Com reset state 2: Boot up state 3: Pre-operation state 4: Operation state 5: Stop state	Read only
09-42	CANopen control status	0: Not ready for use state 1: Inhibit start state 2: Ready to switch on state 3: Switched on state 4: Enable operation state 7: Quick stop active state 13: Error reaction activation state 14: Error state	Read only
09-45	CANopen master function	0: Disable 1: Enable	0
09-46	CANopen master address	0–127	100
09-49	CANopen extension setting	bit0: Index 604F and 6050 update to the 1st acceleration / deceleration time or not. bit0=0: update to the 1st acceleration / deceleration time (default) bit0=1: do not update bit1: The verification of CANopen identification code is distinguished by power module or drive series. bit1=0: distinguished by power module bit1=1: distinguished by drive series	0002h
09-60	Communication card identification	0–12 0: No communication card 1: DeviceNet Slave 2: Profibus-DP Slave 3: CANopen Slave / Master	Read only

	Pr.	Parameter Name	Setting Range	Default
			4: Modbus-TCP Slave 5: EtherNet / IP Slave 6: EtherCAT (applied to 230V / 460V models) 12: PROFINET (applied to 230V / 460V models)	
	09-61	Firmware version of communication card	Read only	Read only
	09-62	Product code	Read only	Read only
	09-63	Error code	Read only	Read only
✓	09-70	Communication card address (for DeviceNet or PROFIBUS)	DeviceNet: 0–63 Profibus-DP: 1–125	1
✓	09-71	Communication card speed setting (for DeviceNet)	Standard DeviceNet: 0: 125 Kbps 1: 250 Kbps 2: 500 Kbps 3: 1 Mbps (Delta only) Non-standard DeviceNet: (Delta only) 0: 10 Kbps 1: 20 Kbps 2: 50 Kbps 3: 100 Kbps 4: 125 Kbps 5: 250 Kbps 6: 500 Kbps 7: 800 Kbps 8: 1 Mbps	2
✓	09-72	Additional settings for communication card speed (for DeviceNet)	0: Standard DeviceNet In this mode, the baud rate can only be 125 Kbps, 250 Kbps or 500 Kbps in standard DeviceNet speed 1: Non-standard DeviceNet In this mode, DeviceNet baud rate can be same as that for CANopen (0–8).	0
✓	09-75	Communication card IP configuration (for Modbus TCP)	0: Static IP 1: Dynamic IP (DHCP)	0
✓	09-76	Communication card IP address 1 (for Modbus TCP)	0–65535	0
✓	09-77	Communication card IP address 2 (for Modbus TCP)	0–65535	0
✓	09-78	Communication card IP address 3 (for Modbus TCP)	0–65535	0

	Pr.	Parameter Name	Setting Range	Default
✓	09-79	Communication card IP address 4 (for Modbus TCP)	0–65535	0
✓	09-80	Communication card address mask 1 (for Modbus TCP)	0–65535	0
✓	09-81	Communication card address mask 2 (for Modbus TCP)	0–65535	0
✓	09-82	Communication card address mask 3 (for Modbus TCP)	0–65535	0
✓	09-83	Communication card address mask 4 (for Modbus TCP)	0–65535	0
✓	09-84	Communication card gateway address 1 (for Modbus TCP)	0–65535	0
✓	09-85	Communication card gateway address 2 for Modbus TCP)	0–65535	0
✓	09-86	Communication card gateway address 3 (for Modbus TCP)	0–65535	0
✓	09-87	Communication card gateway address 4 (for Modbus TCP)	0–65535	0
✓	09-88	Communication card password (Low word) (for Modbus TCP)	0–99	0
✓	09-89	Communication card password (High word) (for Modbus TCP)	0–99	0
✓	09-90	Reset communication card (for Modbus TCP)	0: Disable 1: Reset to defaults	0
✓	09-91	Additional settings for the communication card (for Modbus TCP)	bit0: Enable IP filter bit1: Enable internet parameters (1 bit). When the IP address is set, this bit is enabled. After updating the parameters for the communication card, this bit changes to disabled. bit2: Enable login password (1 bit). When you enter the login password, this bit is enabled. After updating the parameters for the communication card, this bit changes to disabled.	0
	09-92	Communication card status (for Modbus TCP)	bit0: Enable password When the communication card is set with a password, this bit is enabled. When the password is cleared, this bit is disabled.	0

10 Feedback Control Parameters

	Pr.	Parameter Name	Setting Range	Default
	10-00	Encoder type selection	0: Disable 1: ABZ 2: ABZ (Delta encoder for Delta permanent magnet synchronous AC motor) 3: Resolver 4: ABZ / UVW 5: MI8 single-phase pulse input 6: Sin / Cos, absolute (A / B, C / D, R) 7: Sin / Cos, incremental (A / B, R)	0
	10-01	Encoder pulses per revolution	1–20000	600
	10-02	Encoder input type setting	0: Disable 1: A / B phase pulse inputs, run forward if A-phase leads B-phase by 90 degrees 2: A / B phase pulse inputs, run forward if B-phase leads A-phase by 90 degrees 3: A-phase is a pulse input and B-phase is a direction input (L = reverse direction, H = forward direction) 4: A-phase is a pulse input and B-phase is a direction input (L = forward direction, H = reverse direction) 5: Single-phase input	0
✓	10-03	Frequency division output setting (denominator)	1–255	1
✓	10-04	Mechanical gear at load side A1	1–65535	100
✓	10-05	Mechanical gear at motor side B1	1–65535	100
✓	10-06	Mechanical gear at load side A2	1–65535	100
✓	10-07	Mechanical gear at motor side B2	1–65535	100
✓	10-08	Treatment for encoder / speed observer feedback fault	0: Warn and continue operation 1: Fault and ramp to stop 2: Fault and coast to stop	2
✓	10-09	Detection time of encoder / speed observer feedback fault	0.0–10.0 sec. 0: Disable	1.0
✓	10-10	Encoder / speed observer stall level	0–120% 0: No function	115
✓	10-11	Detection time of encoder / speed observer stall	0.0–2.0 sec.	0.1

	Pr.	Parameter Name	Setting Range	Default
✓	10-12	Encoder / speed observer stall action	0: Warn and continue operation 1: Fault and ramp to stop 2: Fault and coast to stop	2
✓	10-13	Encoder / speed observer slip range	0–50% 0: No function	50
✓	10-14	Detection time of encoder / speed observer slip	0.0–10.0 sec.	0.5
✓	10-15	Encoder / speed observer stall and slip error action	0: Warn and continue operation 1: Fault and ramp to stop 2: Fault and coast to stop	2
	10-16	Pulse input type setting	0: Disable 1: Phases A and B are pulse inputs, forward direction if A-phase leads B-phase by 90 degrees 2: Phases A and B are pulse inputs, forward direction if B-phase leads A-phase by 90 degrees 3: Phase A is a pulse input and phase B is a direction input (L = reverse direction, H = forward direction). 4: Phase A is a pulse input and phase B is a direction input. (L = forward direction, H = reverse direction). 5: Single-phase pulse input (MI8) (applied to 230V / 460V models)	0
✓	10-17	Electrical gear A	1–65535	100
✓	10-18	Electrical gear B	1–65535	100
✓	10-21	PG2 pulse input speed command low pass filter time	0.000–65.535 sec.	0.100
✓	10-24	FOC & TQC function control	bit0: ASR control at sensorless torque (0: use PI as ASR; 1: use P as ASR) bit11: Activate DC braking when executing zero torque command (0: ON; 1: OFF) bit12: FOC Sensorless mode, cross zero means speed goes from negative to positive or reverse direction (0: determined by stator frequency; 1: determined by speed command) bit15: Direction control at open loop status (0: Switch ON direction control; 1: Switch OFF direction control)	0
✓	10-25	FOC bandwidth for speed observer	20.0–100.0 Hz	40.0
✓	10-26	FOC minimum stator frequency	0.0–10.0% fN	2.0
✓	10-27	FOC low-pass filter time constant	1–1000 ms	50

	Pr.	Parameter Name	Setting Range	Default
✓	10-28	FOC gain for excitation current rise time	33–100% Tr	100
✓	10-29	Upper limit of frequency deviation	0.00–200.00 Hz	20.00
	10-30	Resolver pole pair	1–50 pole pairs	1
✓	10-31	I/F mode, current command	0–150% rated current of the motor	40
✓	10-32	PM FOC sensorless speed estimator bandwidth (high speed)	0.00–600.00 Hz	5.00
✓	10-33	PM FOC sensorless speed estimator bandwidth (low speed)	0.00–600.00 Hz	1.00
✓	10-34	PM sensorless speed estimator low-pass filter gain	0.00–655.35	1.00
✓	10-35	AMR (Kp) gain	0.00–3.00	1.00
✓	10-36	AMR (Ki) gain	0.00–3.00	0.20
✓	10-37	PM sensorless control word	0000–FFFFh	0000h
✓	10-39	Frequency to switch from I/F mode to PM sensorless mode	0.00–599.00 Hz	20.00
		Frequency to switch from IMVF mode to IMFOCPG mode when Pr.11-00 bit11=1 in IMFOCPG mode	0.00–599.00 Hz	20.00
✓	10-40	Frequency to switch from PM sensorless mode to I/F mode	0.00–599.00 Hz	20.00
		Frequency to switch from IMFOCPG mode to IMVF mode when Pr.11-00 bit11=1 in IMFOCPG mode	30.00–599.00 Hz	40.00
✓	10-41	I/F mode, Id current low pass-filter time	0.0–6.0 sec.	0.2
✓	10-42	Initial angle detection pulse value	0.0–3.0	1.0
	10-43	PG card version	0.00–655.35	Read only
	10-47	PG1 pulse imputation scaling factor	0–3	0
✓	10-49	Zero voltage time during start-up	0.000–60.000 sec.	0.000
✓	10-50	Reverse angle limit (Electrical angle)	0.00–30.00 degree	10.00
✓	10-51	Injection frequency	0–1200 Hz	500

	Pr.	Parameter Name	Setting Range	Default
✓	10-52	Injection magnitude	0.0–200.0 V 230V models: 0.0–100.0 V 460V models: 0.0–200.0 V 575V models: 0.0–200.0 V 690V models: 0.0–200.0 V	15.0 30.0 30.0 30.0
✓	10-53	PM initial rotor position detection method	0: Disable 1: Force attracting the rotor to zero degrees 2: High frequency injection 3: Pulse injection	0
	10-54	Magnetic flux linkage estimate low-speed gain	10–1000%	100
	10-55	Magnetic flux linkage estimate high-speed gain	10~1000%	100
✓	10-56	Kp of phase-locked loop	10~1000%	100
✓	10-57	Ki of phase-locked loop	10~1000%	100
	10-58	Mutual inductance gain compensation	0.00~655.35	1.00

11 Advanced Parameters

	Pr.	Parameter Name	Setting Range	Default
	11-00	System control	bit0: Auto-tuning for ASR bit1: Inertia estimate (only for FOCPG control mode) bit2: Zero-speed servo bit6: 0 Hz linear-cross (applied to 230V / 460V models) bit7: Saving or not saving the frequency bit8: Maximum speed for point-to-point position control bit11: Switch between IMFOCPG and IMVF modes	0000h
	11-01	Per-unit of system inertia	1–65535 (256 = 1PU)	256
✓	11-02	ASR1 / ASR2 switch frequency	5.00–599.00 Hz	7.00
✓	11-03	ASR1 low-speed bandwidth	1–40 Hz (IM) / 1–100 Hz (PM)	10
✓	11-04	ASR2 high-speed bandwidth	1–40 Hz (IM) / 1–100 Hz (PM)	10
✓	11-05	Zero-speed bandwidth	1–40 Hz (IM) / 1–100 Hz (PM)	10
✓	11-06	ASR 1 gain	0–40 Hz (IM) / 1–100 Hz (PM)	10
✓	11-07	ASR 1 integral time	0.000–10.000 sec.	0.100
✓	11-08	ASR 2 gain	0–40 Hz (IM) / 0–100 Hz (PM)	10
✓	11-09	ASR 2 integral time	0.000–10.000 sec.	0.100
✓	11-10	ASR gain of zero speed	0–40 Hz (IM) / 0–100 Hz (PM)	10
✓	11-11	ASR1 integral time of zero speed	0.000–10.000 sec.	0.100
✓	11-12	Gain for ASR speed feed forward	0–150%	0
✓	11-13	PDFF gain value	0–200%	30
✓	11-14	ASR output low pass filter time	0.000–0.350 sec.	0.008
✓	11-15	Notch filter depth	0–100 dB	0
✓	11-16	Notch filter frequency	0.0–6000.0 Hz	0.0
✓	11-17	Forward motor torque limit Quadrant I	0–500%	500
✓	11-18	Forward regenerative torque limit Quadrant II	0–500%	500
✓	11-19	Reverse motor torque limit Quadrant III	0–500%	500
✓	11-20	Reverse regenerative torque limit Quadrant IV	0–500%	500
✓	11-21	Flux weakening curve for motor 1 gain value	0–200%	90
✓	11-22	Flux weakening curve for motor 2 gain value	0–200%	90

	Pr.	Parameter Name	Setting Range	Default
✓	11-23	Flux weakening area speed response	0–150%	65
✓	11-24	APR gain	0.00–40.00 Hz (IM) / 0–100.00 Hz (PM)	5.00
✓	11-25	Gain value for the APR feed forward	0–100	90
✓	11-26	APR feedforward low pass filter bandwidth	0.00–655.35 sec.	10.00
✓	11-27	Maximum torque command	0–500%	100
✓	11-28	Torque offset source	0: Disable 1: Analog signal input (Pr.03-00) 2: Pr.11-29 3: Controlled through external terminals (Pr.11-30–11-32)	0
✓	11-29	Torque offset setting	-100.0–100.0%	0.0
✓	11-30	High torque offset	-100.0–100.0%	30.0
✓	11-31	Middle torque offset	-100.0–100.0%	20.0
✓	11-32	Low torque offset	-100.0–100.0%	10.0
✓	11-33	Torque command source	0 : Digital keypad 1 : RS-485 communication (Pr.11-34) 2: Analog signal input (Pr.03-00–03-02) 3: CANopen 5: Communication card	0
✓	11-34	Torque command	-100.0–100.0% (Pr.11-27 set value = 100%)	0.0
✓	11-35	Torque command filter time	0.000–1.000 sec.	0.000
	11-36	Speed limit selection	0: Set by Pr.11-37 (Forward speed limit) and Pr.11-38 (reverse speed limit) 1: Set by Pr.00-20 (Master frequency source command) and Pr.11-37, Pr.11-38 2: Set by Pr.00-20 (Master frequency source command).	0
✓	11-37	Forward speed limit (torque mode)	0–120%	10
✓	11-38	Reverse speed limit (torque mode)	0–120%	10
	11-39	Zero torque command mode selection	0: Torque mode 1: Speed mode	0
✓	11-40	~~Point-to-point~~ Position control command source	0: Input from internal register 1: Input from external pulse 2: RS-485 3: CANopen 5: Communication card	0
✓	11-42	System control flag	0000–FFFFh	0000h

	Pr.	Parameter Name	Setting Range	Default
✓	11-43	Position control maximum frequency	0.00–599.00 Hz	60.00
✓	11-44	Position control acceleration time	0.00–655.35 sec.	1.00
✓	11-45	Position control deceleration time	0.00–655.35 sec.	1.00
	11-46	Torque output filter time (applied to 230V / 460V models)	0.000–65.535 sec.	0.050
	11-47	Notch filter bandwidth	0–1000 Hz	0
	11-50	APR S-curve time	0.000–1.000	0.300
	11-51	Maximum allowable position error	0–65535	1000
	11-52	Allowable position error range	0–65535	10
	11-53	Allowable position error cumulative time	0.000–65.535 sec.	0.500
	11-54	Treatment to the large position control error	0: Warn and continue operation (display oPE on keypad) 1: Fault and ramp to stop (display oPEE on keypad) 2: Fault and coast to stop (display oPEE on keypad)	0
✓	11-56	Software positive limit (revolution)	-30000–30000 revolutions	30000
✓	11-57	Software positive limit (pulse)	Refer to Pr.10-01 setting	0
✓	11-58	Software negative limit (revolution)	-30000–30000 revolutions	-30000
✓	11-59	Software negative limit (pulse)	Refer to Pr.10-01 setting	0
	11-60	Position control bit	bit0: Enable position memory function bit1: The pulse per revolution at load side counts by ppr bit2: Enable software limit switch function bit3: Enable hardware limit switch function	00Ah
	11-62	Encoder at load side ppr number (high byte)	0–65535	0
	11-63	Encoder at load side ppr number (low byte)	0–65535	2400
	11-65	Single-point positioning position (high byte)	0–ppr number at load side	0
	11-66	Single-point positioning position (low byte)	0–ppr number at load side	0
	11-68	Homing method	0000h–0128h	0008h
	11-69	Homing control time out	0.0–6000.0 sec.	60.0
	11-70	Homing control 1st step speed	0.00–599.00 Hz	8.00
	11-71	Homing control 2nd step speed	0.00–599.00 Hz	2.00

Pr.	Parameter Name	Setting Range	Default
11-72	Homing control acceleration / deceleration time (0–Homing control 1st step speed)	0.00–600.00 sec.	10.00
11-73	Homing control offset (revolution)	-30000–30000 revolutions	0
11-74	Homing control offset (pulse)	Refer to Pr.10-01 setting	0
11-75	Position record (revolution)	-30000–30000 revolutions	0
11-76	Position record (pulse)	Refer to Pr.10-01 setting	0
11-78	HALT revived selection	0: Stopped 1: Continue according to the previous position command	0

13 Application Parameters by Industry (applied to 230V / 460V models)

Pr.	Parameter Name	Setting Range	Default
13-00	Industry-specific parameter application	0: Disabled 1: User-defined parameter 2: Compressor (IM) 3: Fan 4: Pump 10: Air Handling Unit, AHU	0

14 Extension Card Parameter

	Pr.	Parameter Name	Setting Range	Default
✓	14-00	Extension card Input terminal selection (AI10)	0: Disable 1: Frequency command 2: Torque command (torque limit under speed mode) 3: Torque compensation command 4: PID target value 5: PID feedback signal 6: Thermistor (PTC / KTY-84) input value 7: Positive torque limit 8: Negative torque limit 9: Regenerative torque limit 10: Positive / negative torque limit 11: PT100 thermistor input value 13: PID compensation value	0
✓	14-01	Extension card Input terminal selection (AI11)		0
✓	14-08	Analog input filter time (AI10)	0.00–20.00 sec.	0.01
✓	14-09	Analog input filter time (AI11)	0.00–20.00 sec.	0.01
	14-10	Analog input 4–20 mA signal loss selection (AI10)	0: Disable 1: Continue operation at the last frequency 2: Decelerate to 0 Hz 3: Stop immediately and display ACE	0
	14-11	Analog input 4–20 mA signal loss selection (AI11)		0
✓	14-12	Extension card output terminal selection (AO10)	0: Output frequency (Hz) 1: Frequency command (Hz) 2: Motor speed (Hz) 3: Output current (rms) 4: Output voltage 5: DC bus voltage 6: Power factor 7: Power 8: Torque 9: AVI 10: ACI 11: AUI 12: Iq current command 13: Iq feedback value 14: Id current command 15: Id feedback value 18: Torque command 19: PG2 frequency command 20: CANopen analog output	0
✓	14-13	Extension card output terminal selection (AO11)		0

	Pr.	Parameter Name	Setting Range	Default
			21: RS-485 analog output 22: Communication card analog output 23: Constant voltage output 25: CANopen and RS-485 analog output	
✓	14-14	Analog output 1 gain output (AO10)	0.0–500.0%	100.0
✓	14-15	Analog output 1 gain output (AO11)	0.0–500.0%	100.0
✓	14-16	Analog output 1 in 0–10 V REV direction (AO10)	0: Absolute value of output voltage 1: Reverse output 0V; Forward output 0–10V 2: Reverse output 5–0V; Forward output 5–10V	0
✓	14-17	Analog output 1 in 0–10 V REV direction (AO11)		0
✓	14-18	Extension card input selection (AI10)	0: 0–10 V (AVI10) 1: 0–20 mA (ACI10) 2: 4–20 mA (ACI10)	0
✓	14-19	Extension card input selection (AI11)	0: 0–10 V (AVI11) 1: 0–20 mA (ACI11) 2: 4–20 mA (ACI11)	0
	14-20	AO10 DC output setting level	0.00–100.00%	0.00
	14-21	AO11 DC output setting level	0.00–100.00%	0.00
✓	14-22	AO10 filter output time	0.00–20.00 sec.	0.01
✓	14-23	AO11 filter output time	0.00–20.00 sec.	0.01
✓	14-36	AO10 output selection	0: 0–10 V 1: 0–20 mA 2: 4–20 mA	0
✓	14-37	AO11 output selection		0