Counter Rotating Fan

38×38×48 mm

San Ace 38 9CRA type

General Specifications

- Material ..... Frame: Plastic (Flammability: UL 94V-0), Impeller: Plastic (Flammability: UL 94V-1)
- Expected life ..... See the table below. (L10 life: 90% survival rate for continuous operation in free air at 60˚C, rated voltage) Expected life at 40°C is for reference only.
- Motor protection function ..... Locked rotor burnout protection, Reverse polarity protection For details, please refer to p. 599.
- Dielectric strength ..... 50/60 Hz, 500 VAC, for 1 minute (between lead wire conductors and frame)
- Insulation resistance ..... 10 MΩ or more with a 500 VDC megger (between lead wire conductors and frame)
- Sound pressure level (SPL) ..... At 1 m away from the air inlet
- Storage temperature ..... -30 to +70˚C (Non-condensing)
- Lead wire ..... Inlet ⊕Red ⊖Black Sensor Yellow Control Brown
  Outlet ⊕Orange ⊖Gray Sensor Purple Control White
- Mass ..... 80 g

Specifications

The models listed below **have pulse sensors with PWM control function.**

Model no.	Rated voltage [V]	Operating voltage range [V]	PWM duty cycle* [%]	Rated current [A]	Rated input [W]	Rated speed [min⁻¹] Inlet	Rated speed [min⁻¹] Outlet	Max. airflow [m³/min]	Max. airflow [CFM]	Max. static pressure [Pa]	Max. static pressure [inchH₂O]	SPL [dB (A)]	Operating temperature [˚C]	Expected life [h]
9CRA0312P4K03	12	10.8 to 13.2	100	1.5	18.0	17600	14520	0.77	27.2	700.0	2.81	64	-20 to +70	40000/60˚C (70000/40˚C)
			0	0.2	2.4	5280	4200	0.22	7.8	54.9	0.22	33		
9CRA0312P4J03			100	1.1	13.2	16000	13200	0.7	24.7	560.0	2.25	62		
			0	0.18	2.2	4800	3960	0.21	7.4	50.4	0.2	31		

* PWM input frequency is 25 kHz; models without specifications at 0% PWM duty cycle have zero fan speed at 0%.

Note: Sensor and control options are available for selection. Refer to the table on p. 625.

Airflow - Static Pressure Characteristics / PWM Duty - Speed Characteristics Example

9CRA0312P4K03 With pulse sensor with PWM control function

PWM duty cycle

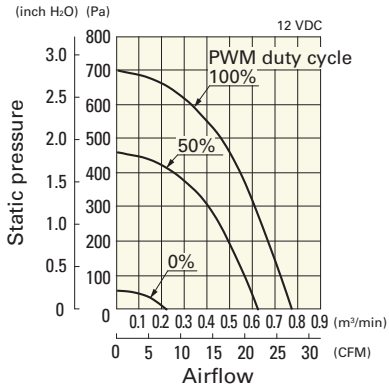

Operating voltage range

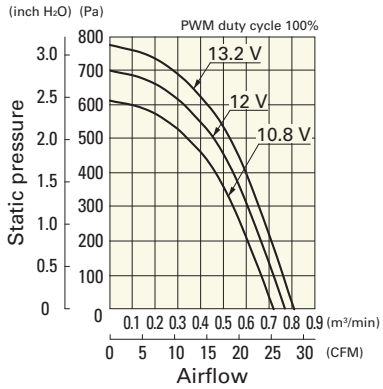

PWM duty - Speed characteristics example

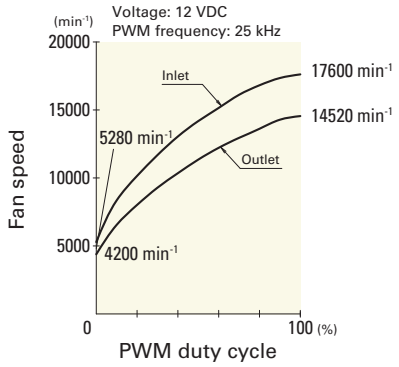

Airflow - Static Pressure Characteristics / PWM Duty - Speed Characteristics Example

9CRA0312P4J03 With pulse sensor with PWM control function

PWM duty cycle

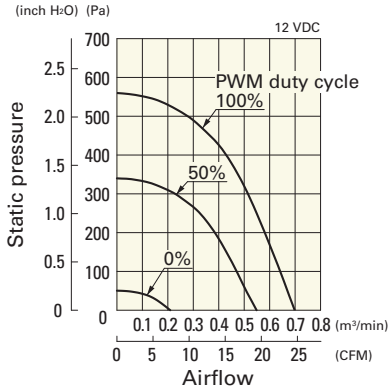

Operating voltage range

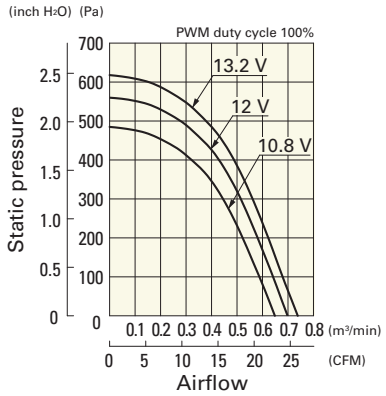

PWM duty - Speed characteristics example

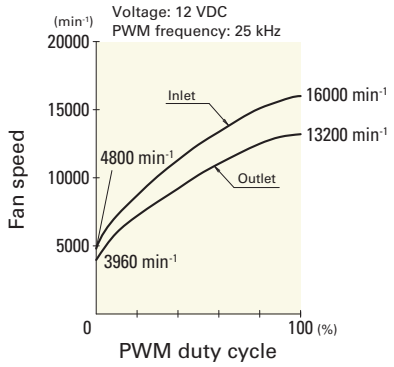

Dimensions (unit: mm)

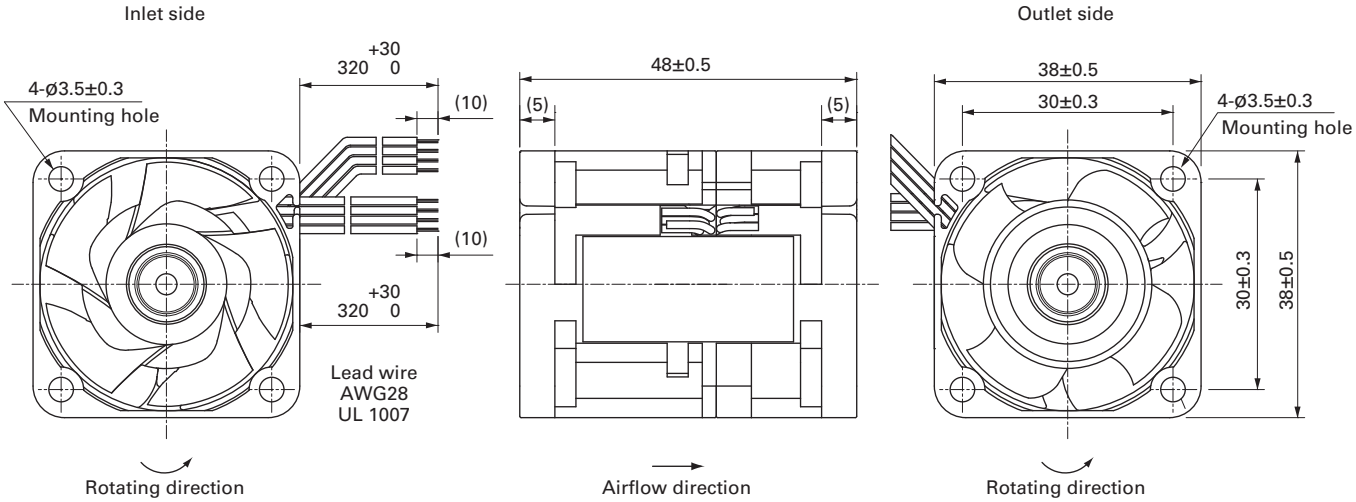

Reference Dimensions of Mounting Holes and Vent Opening (unit: mm)

Inlet side, Outlet side

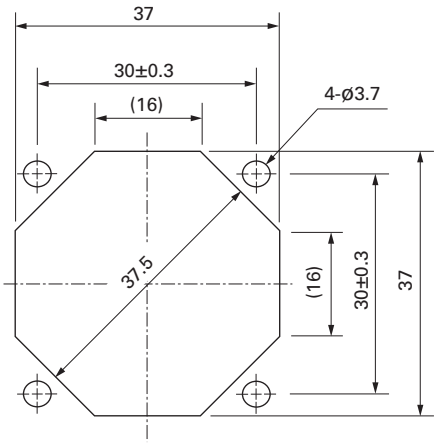

Options

Finger guards page: p. 584

Model no.: 109-1065

Counter Rotating Fan

40×40×48 mm

San Ace 40 9CRA type

General Specifications

- Material ..... Frame: Plastic (Flammability: UL 94V-0), Impeller: Plastic (Flammability: UL 94V-1)
- Expected life ..... See the table below. (L10 life: 90% survival rate for continuous operation in free air at 60˚C, rated voltage) Expected life at 40°C is for reference only.
- Motor protection function ..... Locked rotor burnout protection, Reverse polarity protection For details, please refer to p. 599.
- Dielectric strength ..... 50/60 Hz, 500 VAC, for 1 minute (between lead wire conductors and frame)
- Insulation resistance ..... 10 MΩ or more with a 500 VDC megger (between lead wire conductors and frame)
- Sound pressure level (SPL) ..... At 1 m away from the air inlet
- Storage temperature ..... -30 to +70˚C (Non-condensing)
- Lead wire ..... Inlet ⊕Red ⊖Black Sensor Yellow Control Brown
  Outlet ⊕Orange ⊖Gray Sensor Purple Control White
- Mass ..... 80 g

Specifications

The models listed below **have pulse sensors with PWM control function.**

Model no.	Rated voltage [V]	Operating voltage range [V]	PWM duty cycle* [%]	Rated current [A]	Rated input [W]	Rated speed [min⁻¹] Inlet	Rated speed [min⁻¹] Outlet	Max. airflow [m³/min]	Max. airflow [CFM]	Max. static pressure [Pa]	Max. static pressure [inchH₂O]	SPL [dB (A)]	Operating temperature [˚C]	Expected life [h]
9CRA0412P4K03	12	10.8 to 13.2	100	1.6	19.2	17500	11700	0.92	32.5	650.0	2.61	64	-20 to +70	40000/60˚C (70000/40˚C)
			0	0.19	2.28	5250	3510	0.276	9.75	58.5	0.235	33		
9CRA0412P4J03			100	1.2	14.4	16200	10800	0.85	30.0	560.0	2.25	62		
			0	0.15	1.8	4500	3000	0.236	8.33	43.2	0.173	28		
9CRA0412P4G03			100	1.0	12.0	14700	9800	0.77	27.2	460.0	1.85	59		
			0	0.15	1.8	4410	2940	0.231	8.16	41.4	0.166	28		

* PWM input frequency is 25 kHz; models without specifications at 0% PWM duty cycle have zero fan speed at 0%.

Note: Sensor and control options are available for selection. Refer to the table on p. 625.

Airflow - Static Pressure Characteristics / PWM Duty - Speed Characteristics Example

9CRA0412P4K03 With pulse sensor with PWM control function

PWM duty cycle

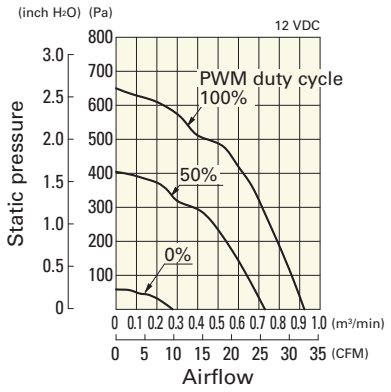

Operating voltage range

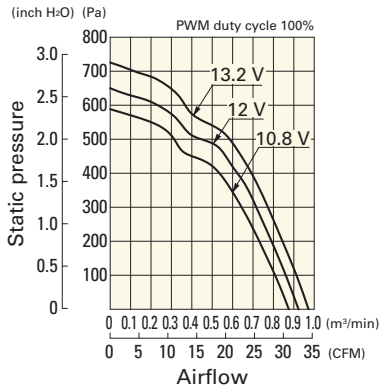

PWM duty - Speed characteristics example

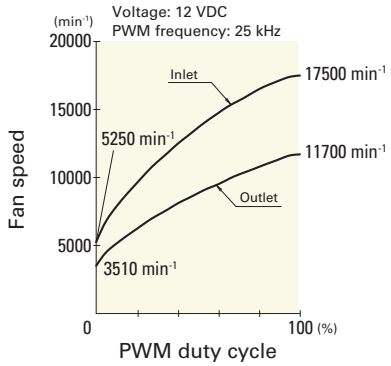

Airflow - Static Pressure Characteristics / PWM Duty - Speed Characteristics Example

9CRA0412P4J03 With pulse sensor with PWM control function

PWM duty cycle

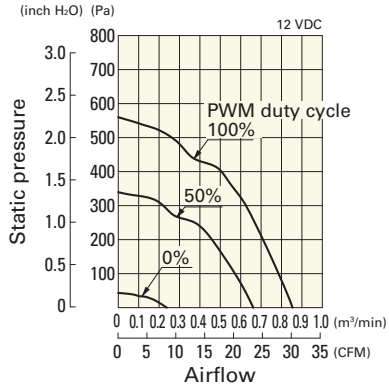

Operating voltage range

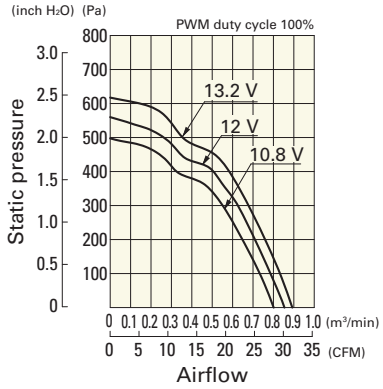

PWM duty - Speed characteristics example

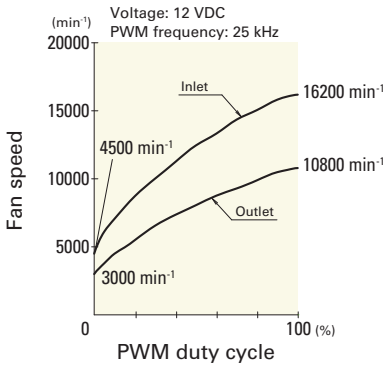

9CRA0412P4G03 With pulse sensor with PWM control function

PWM duty cycle

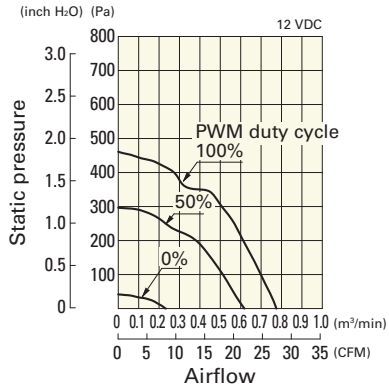

Operating voltage range

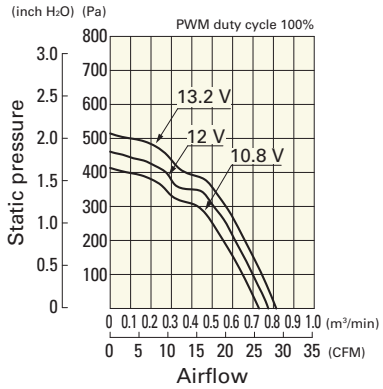

PWM duty - Speed characteristics example

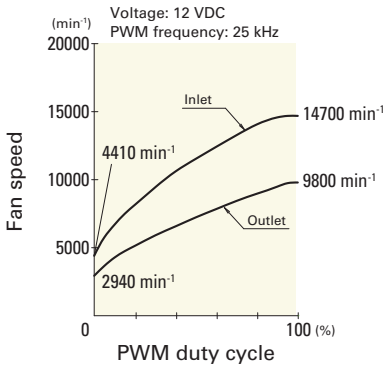

Dimensions (unit: mm)

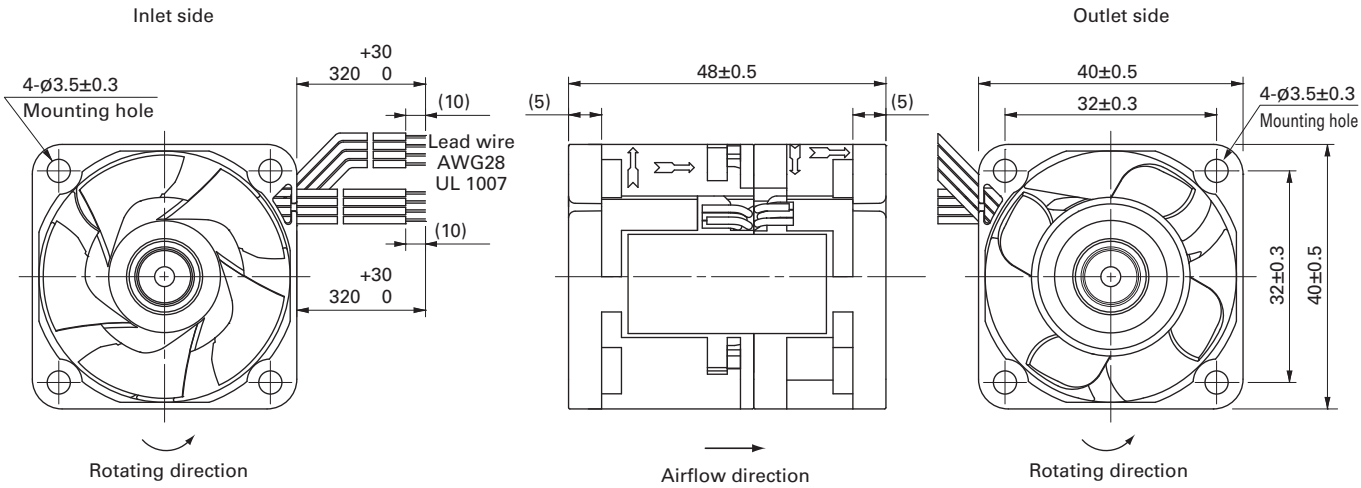

Reference Dimensions of Mounting Holes and Vent Opening (unit: mm)

Inlet side, Outlet side

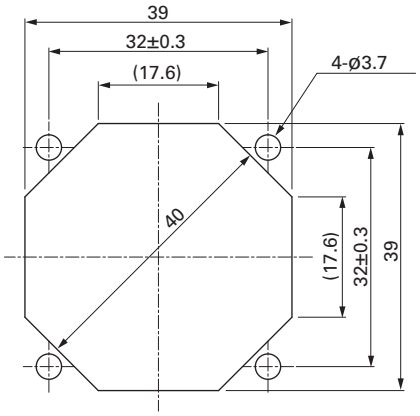

Options

Finger guards page: p. 584

Model no.: 109-059, 109-059H

40×40×56 mm

San Ace 40 9CRJ type

General Specifications

- Material ..... Frame: Plastic (Flammability: UL 94V-0), Impeller: Plastic (Flammability: UL 94V-0)
- Expected life ..... See the table below. (L10 life: 90% survival rate for continuous operation in free air at 60˚C, rated voltage) Expected life at 40°C is for reference only.
- Motor protection function ..... Locked rotor burnout protection, Reverse polarity protection For details, please refer to p. 599.
- Dielectric strength ..... 50/60 Hz, 500 VAC, for 1 minute (between lead wire conductors and frame)
- Insulation resistance ..... 10 MΩ or more with a 500 VDC megger (between lead wire conductors and frame)
- Sound pressure level (SPL) ..... At 1 m away from the air inlet
- Storage temperature ..... -30 to +70˚C (Non-condensing)
- Lead wire ..... Inlet ⊕Red ⊖Black Sensor Yellow Control Brown
  Outlet ⊕Orange ⊖Gray Sensor Purple Control White
- Mass ..... 110 g

Specifications

The models listed below **have pulse sensors with PWM control function.**

Model no.	Rated voltage [V]	Operating voltage range [V]	PWM duty cycle* [%]	Rated current [A]	Rated input [W]	Rated speed [min⁻¹] Inlet	Rated speed [min⁻¹] Outlet	Max. airflow [m³/min]	Max. airflow [CFM]	Max. static pressure [Pa]	Max. static pressure [inchH₂O]	SPL [dB (A)]	Operating temperature [˚C]	Expected life [h]
9CRJ0412P5J001	12	10.8 to 12.6	100	3.1	37.2	36200	32000	1.06	37.4	2400	9.64	72	-20 to +70	30000/60˚C (53000/40˚C)
			20	0.1	1.2	4500	4000	0.11	3.9	40	0.16	28		

* PWM input frequency is 25 kHz; models without specifications at 0% PWM duty cycle have zero fan speed at 0%.

Airflow - Static Pressure Characteristics / PWM Duty - Speed Characteristics Example

9CRJ0412P5J001 With pulse sensor with PWM control function

PWM duty cycle

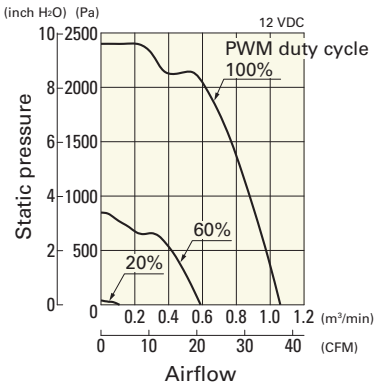

Operating voltage range

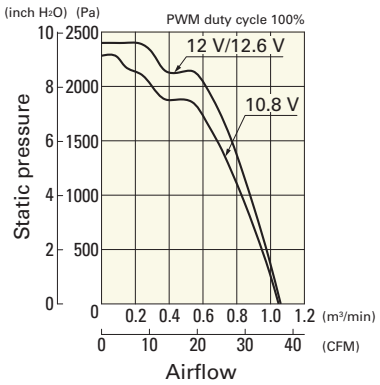

PWM duty - Speed characteristics example

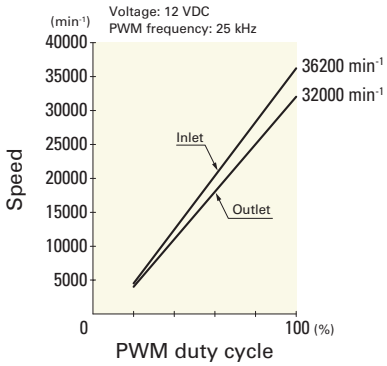

Dimensions (unit: mm)

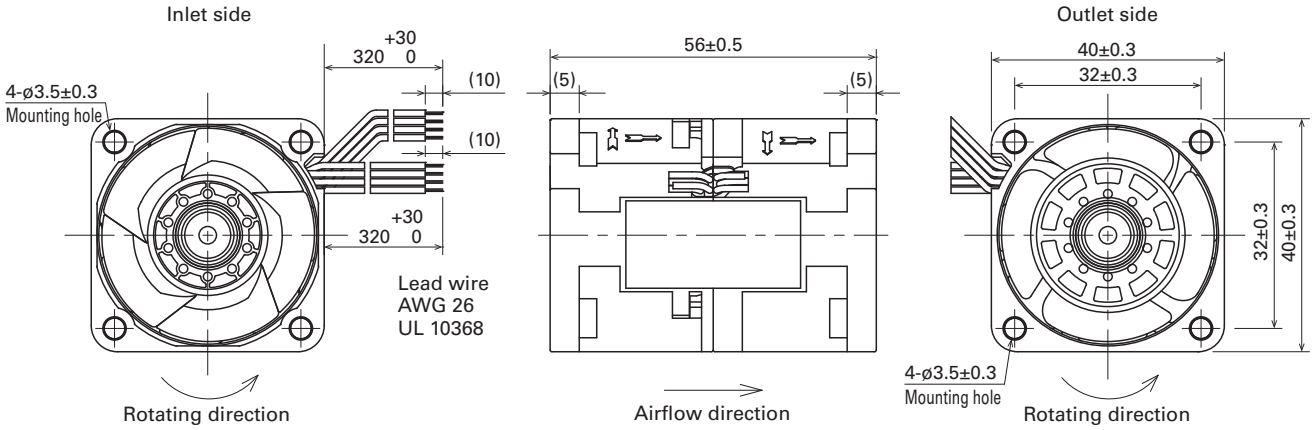

Reference Dimensions of Mounting Holes and Vent Opening (unit: mm)

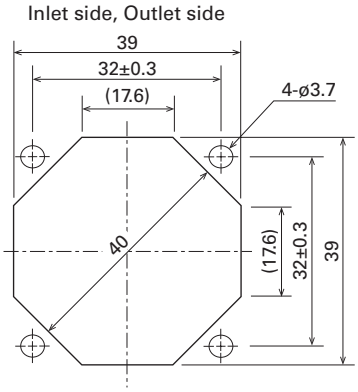

Options

Finger guards page: p. 584

Model no.: 109-059, 109-059H

40×40×56 mm

San Ace 40 9CRH type

General Specifications

- Material ..... Frame: Plastic (Flammability: UL 94V-0), Impeller: Plastic (Flammability: UL 94V-0)
- Expected life ..... See the table below. (L10 life: 90% survival rate for continuous operation in free air at 60˚C, rated voltage) Expected life at 40°C is for reference only.
- Motor protection function ..... Locked rotor burnout protection, Reverse polarity protection For details, please refer to p. 599.
- Dielectric strength ..... 50/60 Hz, 500 VAC, for 1 minute (between lead wire conductors and frame)
- Insulation resistance ..... 10 MΩ or more with a 500 VDC megger (between lead wire conductors and frame)
- Sound pressure level (SPL) ..... At 1 m away from the air inlet
- Storage temperature ..... -30 to +70˚C (Non-condensing)
- Lead wire ..... Inlet ⊕Red ⊖Black Sensor Yellow Control Brown
  Outlet ⊕Orange ⊖Gray Sensor Purple Control White
- Mass ..... 110 g

Specifications

The models listed below **have pulse sensors with PWM control function.**

Model no.	Rated voltage [V]	Operating voltage range [V]	PWM duty cycle* [%]	Rated current [A]	Rated input [W]	Rated speed [min⁻¹] Inlet	Rated speed [min⁻¹] Outlet	Max. airflow [m³/min]	Max. airflow [CFM]	Max. static pressure [Pa]	Max. static pressure [inchH₂O]	SPL [dB (A)]	Operating temperature [˚C]	Expected life [h]
9CRH0412P5J001	12	10.8 to 12.6	100	2.52	30.24	29500	25500	0.93	32.9	1700	6.83	70	-20 to +70	30000/60˚C (53000/40˚C)
			20	0.06	0.72	3000	2600	0.08	2.8	17	0.07	20		

* PWM input frequency is 25 kHz; models without specifications at 0% PWM duty cycle have zero fan speed at 0%.

Note: The » mark indicates Short Lead Time Service applicable models. See p. 654 for details.

Airflow - Static Pressure Characteristics / PWM Duty - Speed Characteristics Example

9CRH0412P5J001 With pulse sensor with PWM control function

PWM duty cycle

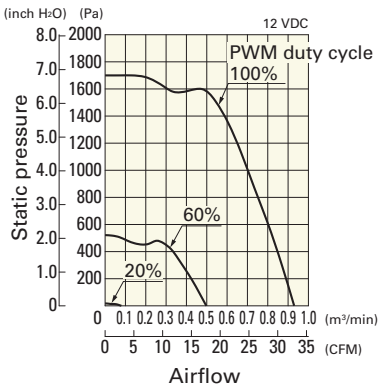

Operating voltage range

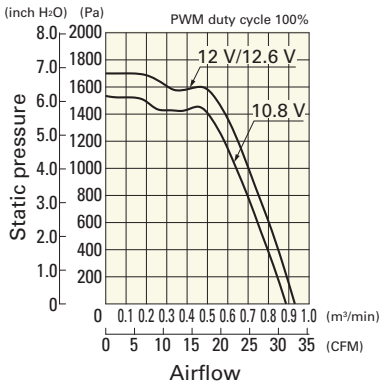

PWM duty - Speed characteristics example

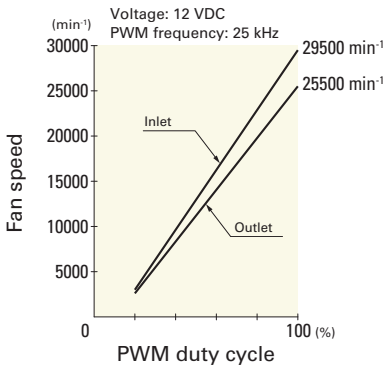

Dimensions (unit: mm)

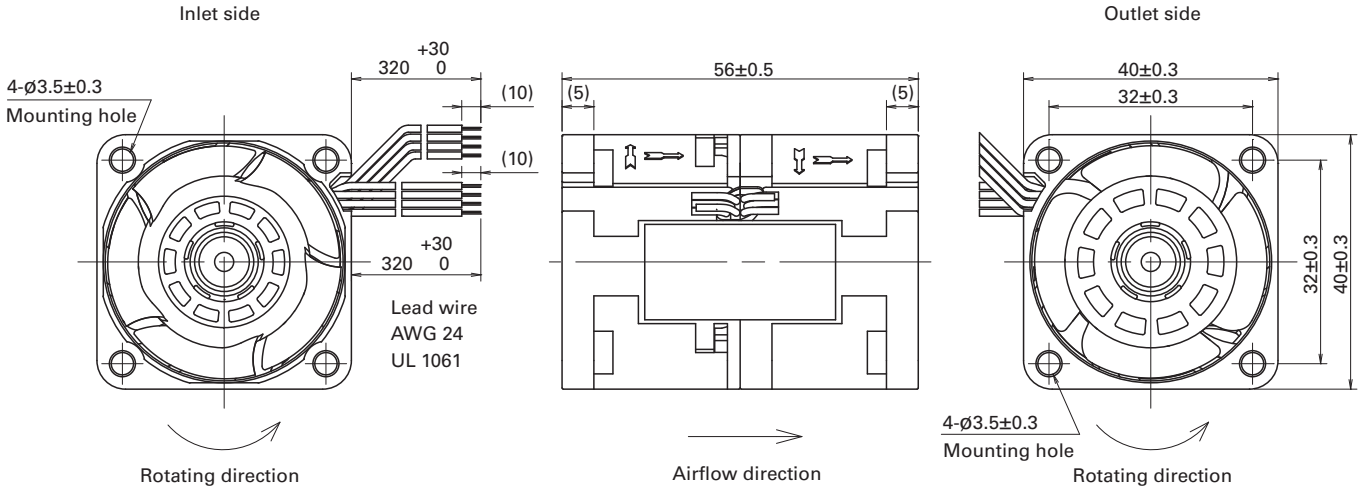

Reference Dimensions of Mounting Holes and Vent Opening (unit: mm)

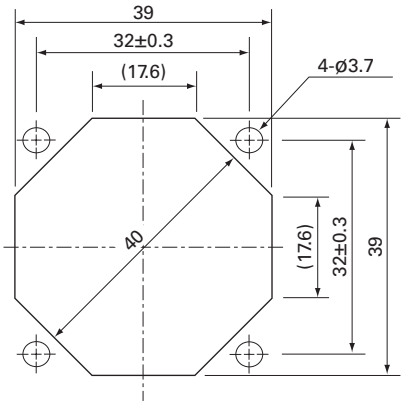

Options

Finger guards page: p. 584

Model no.: 109-059, 109-059H

40×40×56 mm

San Ace 40 9CRV type

General Specifications

- Material ..... Frame: Plastic (Flammability: UL 94V-0), Impeller: Plastic (Flammability: UL 94V-0)
- Expected life ..... See the table below. (L10 life: 90% survival rate for continuous operation in free air at 60˚C, rated voltage) Expected life at 40°C is for reference only.
- Motor protection function ..... Locked rotor burnout protection, Reverse polarity protection For details, please refer to p. 599.
- Dielectric strength ..... 50/60 Hz, 500 VAC, for 1 minute (between lead wire conductors and frame)
- Insulation resistance ..... 10 MΩ or more with a 500 VDC megger (between lead wire conductors and frame)
- Sound pressure level (SPL) ..... At 1 m away from the air inlet
- Storage temperature ..... -30 to +70˚C (Non-condensing)
- Lead wire ..... Inlet ⊕Red ⊖Black Sensor Yellow Control Brown
  Outlet ⊕Orange ⊖Gray Sensor Purple Control White
- Mass ..... 100 g

Specifications

The models listed below **have pulse sensors with PWM control function.**

Model no.	Rated voltage [V]	Operating voltage range [V]	PWM duty cycle* [%]	Rated current [A]	Rated input [W]	Rated speed [min⁻¹] Inlet	Rated speed [min⁻¹] Outlet	Max. airflow [m³/min]	Max. airflow [CFM]	Max. static pressure [Pa]	Max. static pressure [inchH₂O]	SPL [dB (A)]	Operating temperature [˚C]	Expected life [h]
9CRV0412P5J201	12	10.8 to 13.2	100	1.8	21.6	22500	20000	0.9	31.8	1050	4.22	68	-20 to +70	40000/60˚C (70000/40˚C)
			0	0.11	1.32	3800	3500	0.14	4.9	30	0.12	26		

* PWM input frequency is 25 kHz; models without specifications at 0% PWM duty cycle have zero fan speed at 0%.

Note: The » mark indicates Short Lead Time Service applicable models. See p. 654 for details.

Airflow - Static Pressure Characteristics / PWM Duty - Speed Characteristics Example

9CRV0412P5J201 With pulse sensor with PWM control function

PWM duty cycle

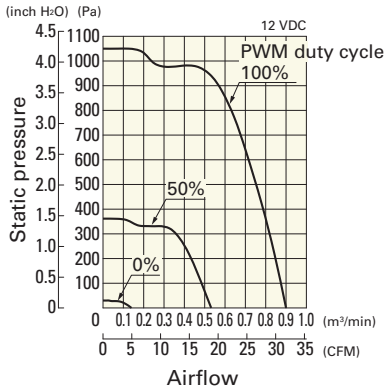

Operating voltage range

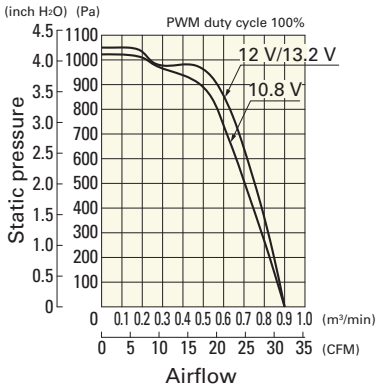

PWM duty - Speed characteristics example

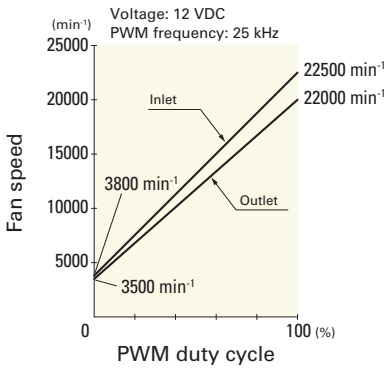

Dimensions (unit: mm)

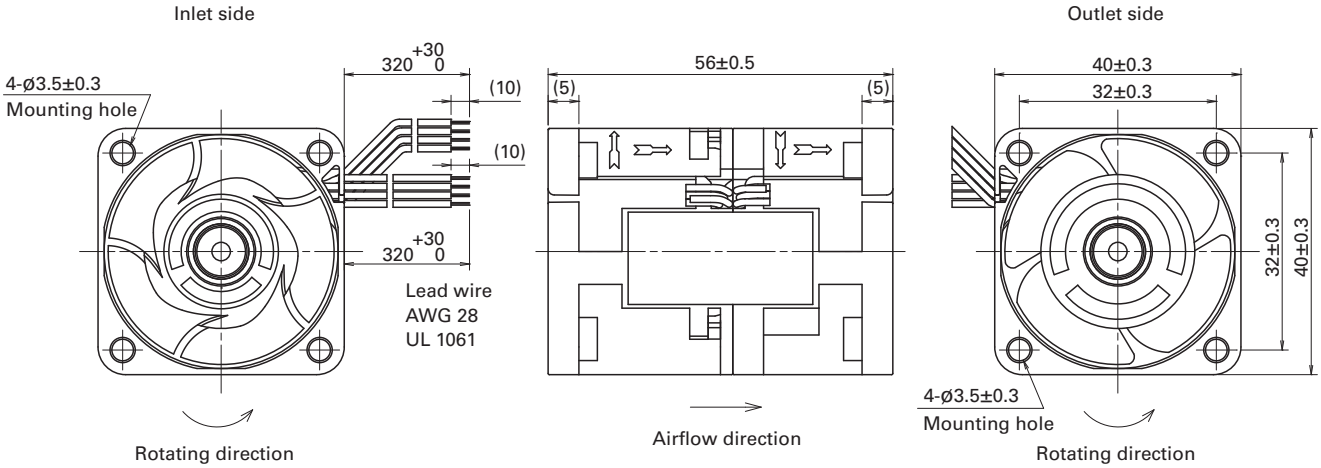

Reference Dimensions of Mounting Holes and Vent Opening (unit: mm)

Inlet side, Outlet side

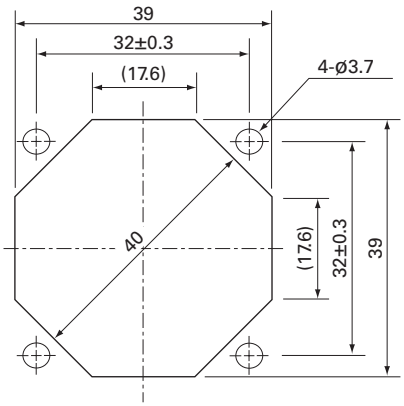

Options

Finger guards page: p. 584

Model no.: 109-059, 109-059H

40×40×56 mm

San Ace 40 9CRD type

General Specifications

- Material ..... Frame: Plastic (Flammability: UL 94V-0), Impeller: Plastic (Flammability: UL 94V-0)
- Expected life ..... See the table below. (L10 life: 90% survival rate for continuous operation in free air at 60˚C, rated voltage) Expected life at 40°C is for reference only.
- Motor protection function ..... Locked rotor burnout protection, Reverse polarity protection For details, please refer to p. 599.
- Dielectric strength ..... 50/60 Hz, 500 VAC, for 1 minute (between lead wire conductors and frame)
- Insulation resistance ..... 10 MΩ or more with a 500 VDC megger (between lead wire conductors and frame)
- Sound pressure level (SPL) ..... At 1 m away from the air inlet
- Storage temperature ..... -30 to +70˚C (Non-condensing)
- Lead wire ..... Inlet ⊕Red ⊖Black Sensor Yellow Control Brown
  Outlet ⊕Orange ⊖Gray Sensor Purple Control White
- Mass ..... 90 g

Specifications

The models listed below **have pulse sensors with PWM control function.**

Model no.	Rated voltage [V]	Operating voltage range [V]	PWM duty cycle* [%]	Rated current [A]	Rated input [W]	Rated speed [min⁻¹] Inlet	Rated speed [min⁻¹] Outlet	Max. airflow [m³/min]	Max. airflow [CFM]	Max. static pressure [Pa]	Max. static pressure [inchH₂O]	SPL [dB (A)]	Operating temperature [˚C]	Expected life [h]
9CRD0412P5J03	12	10.8 to 13.2	100	1.15	13.8	19000	12600	0.87	30.72	630	2.53	61	-20 to +70	40000/60˚C (70000/40˚C)
			0	0.12	1.44	3700	2500	0.15	5.3	25	0.1	22		
9CRD0412P5G03			100	0.9	10.8	16700	11250	0.77	27.19	500	2.01	58		
			0	0.1	1.2	3350	2250	0.13	4.59	21	0.08	21		
9CRD0412P5H03			100	0.6	7.2	15000	10000	0.7	24.72	410	1.65	56		
			0	0.09	1.08	3000	2000	0.12	4.24	16	0.06	20		
9CRD0412P5M03			100	0.52	6.24	14000	9300	0.65	22.95	360	1.45	54		
			0	0.07	0.84	2000	1300	0.07	2.47	7	0.03	15		

* PWM input frequency is 25 kHz; models without specifications at 0% PWM duty cycle have zero fan speed at 0%.

Airflow - Static Pressure Characteristics / PWM Duty - Speed Characteristics Example

9CRD0412P5J03 With pulse sensor with PWM control function

PWM duty cycle

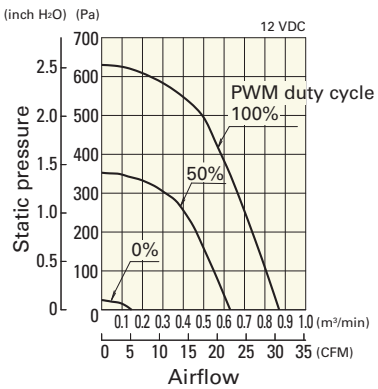

Operating voltage range

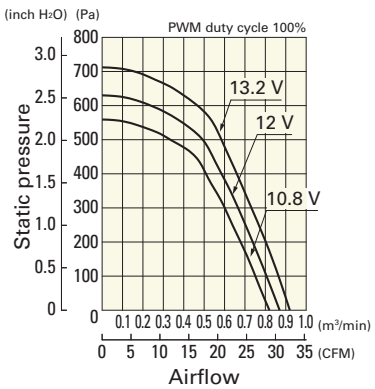

PWM duty - Speed characteristics example

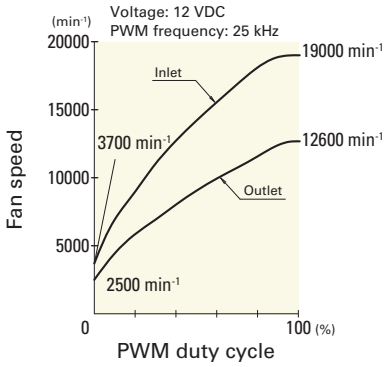

Airflow - Static Pressure Characteristics / PWM Duty - Speed Characteristics Example

9CRD0412P5G03 With pulse sensor with PWM control function

PWM duty cycle

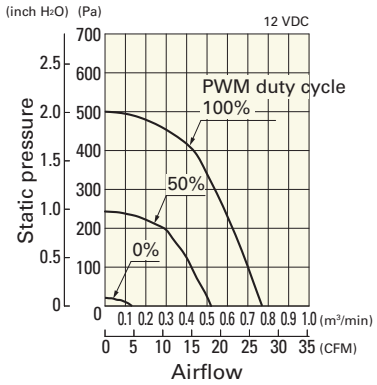

Operating voltage range

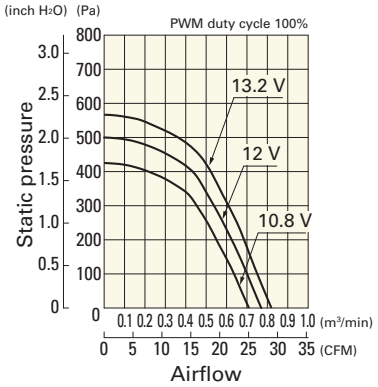

PWM duty - Speed characteristics example

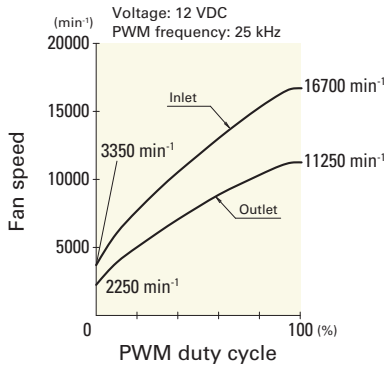

9CRD0412P5H03 With pulse sensor with PWM control function

PWM duty cycle

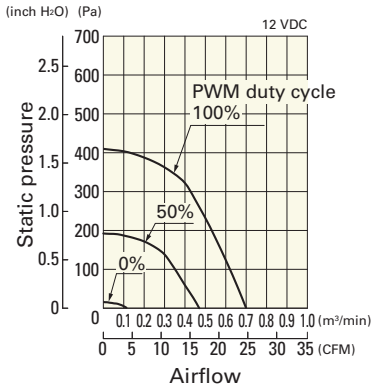

Operating voltage range

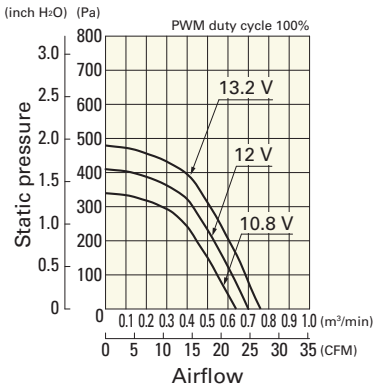

PWM duty - Speed characteristics example

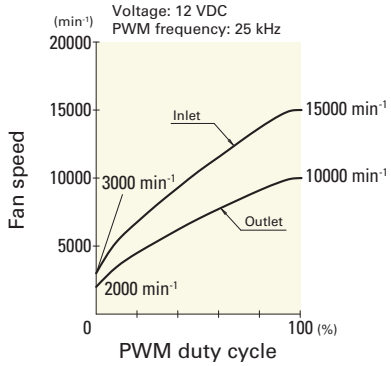

9CRD0412P5M03 With pulse sensor with PWM control function

PWM duty cycle

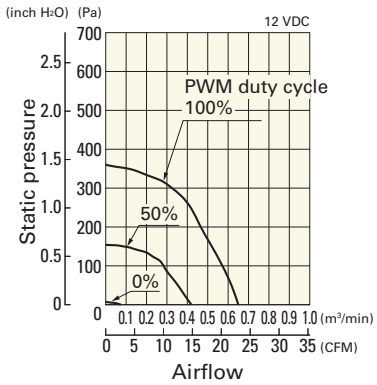

Operating voltage range

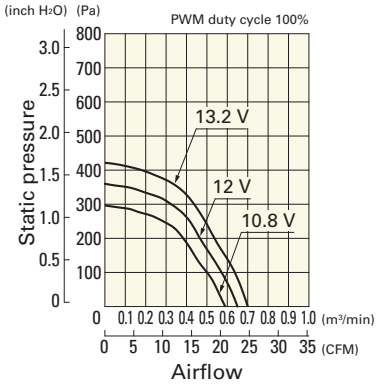

PWM duty - Speed characteristics example

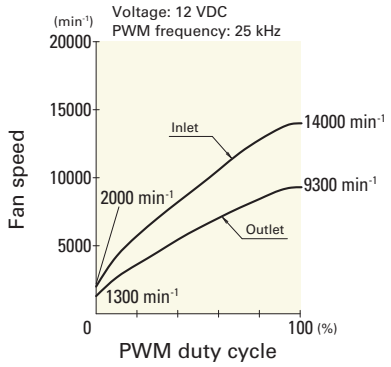

Dimensions (unit: mm)

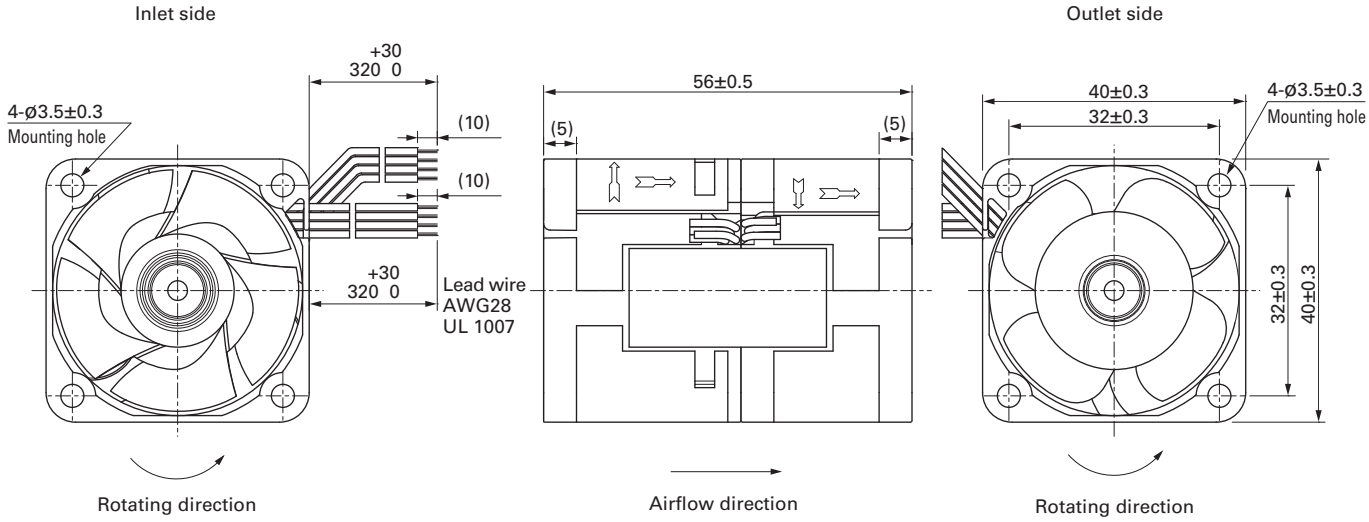

Reference Dimensions of Mounting Holes and Vent Opening (unit: mm)

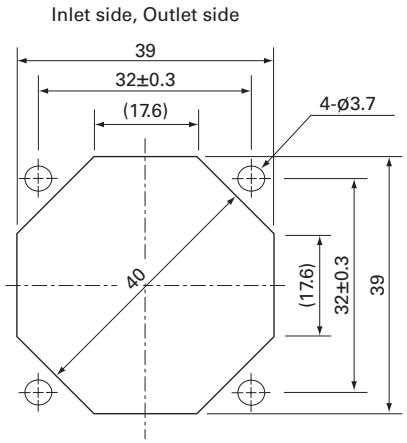

Options

Finger guards page: p. 584

Model no.: 109-059, 109-059H

Counter Rotating Fan

40×40×56 mm

San Ace 40 9CRE type

General Specifications

- Material ..... Frame: Aluminum, Impeller: Plastic (Flammability: UL 94V-0)
- Expected life ..... See the table below. (L10 life: 90% survival rate for continuous operation in free air at 60˚C, rated voltage) Expected life at 40°C is for reference only.
- Motor protection function ..... Locked rotor burnout protection, Reverse polarity protection For details, please refer to p. 599.
- Dielectric strength ..... 50/60 Hz, 500 VAC, for 1 minute (between lead wire conductors and frame)
- Insulation resistance ..... 10 MΩ or more with a 500 VDC megger (between lead wire conductors and frame)
- Sound pressure level (SPL) ..... At 1 m away from the air inlet
- Storage temperature ..... -30 to +70˚C (Non-condensing)
- Lead wire ..... Inlet ⊕Red ⊖Black Sensor Yellow Control Brown
  Outlet ⊕Orange ⊖Gray Sensor Purple Control White
- Mass ..... 110 g

Specifications

The models listed below **have pulse sensors with PWM control function.**

Model no.	Rated voltage [V]	Operating voltage range [V]	PWM duty cycle* [%]	Rated current [A]	Rated input [W]	Rated speed [min⁻¹] Inlet	Rated speed [min⁻¹] Outlet	Max. airflow [m³/min]	Max. airflow [CFM]	Max. static pressure [Pa]	Max. static pressure [inchH₂O]	SPL [dB (A)]	Operating temperature [˚C]	Expected life [h]
9CRE0412P5J03	12	10.8 to 13.2	100	1.4	16.8	15800	12200	0.9	31.8	570.0	2.29	62	-20 to +70	40000/60˚C (70000/40˚C)
			0	0.1	1.2	2850	2250	0.12	4.2	13.7	0.055	20.5		

* PWM input frequency is 25 kHz; models without specifications at 0% PWM duty cycle have zero fan speed at 0%.

Note: Sensor and control options are available for selection. Refer to the table on p. 626.

Airflow - Static Pressure Characteristics / PWM Duty - Speed Characteristics Example

9CRE0412P5J03 With pulse sensor with PWM control function

PWM duty cycle

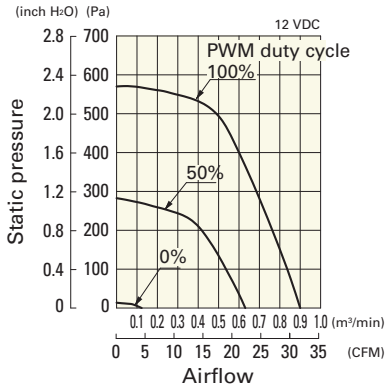

Operating voltage range

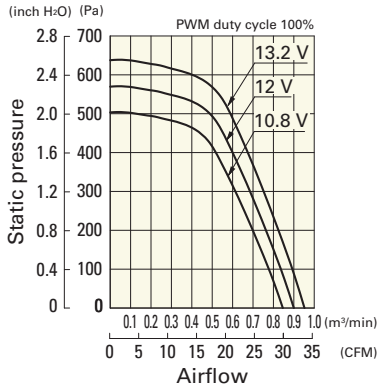

PWM duty - Speed characteristics example

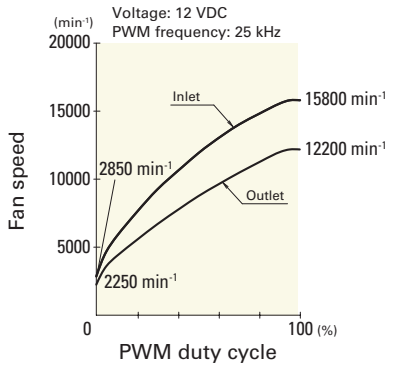

Dimensions (unit: mm)

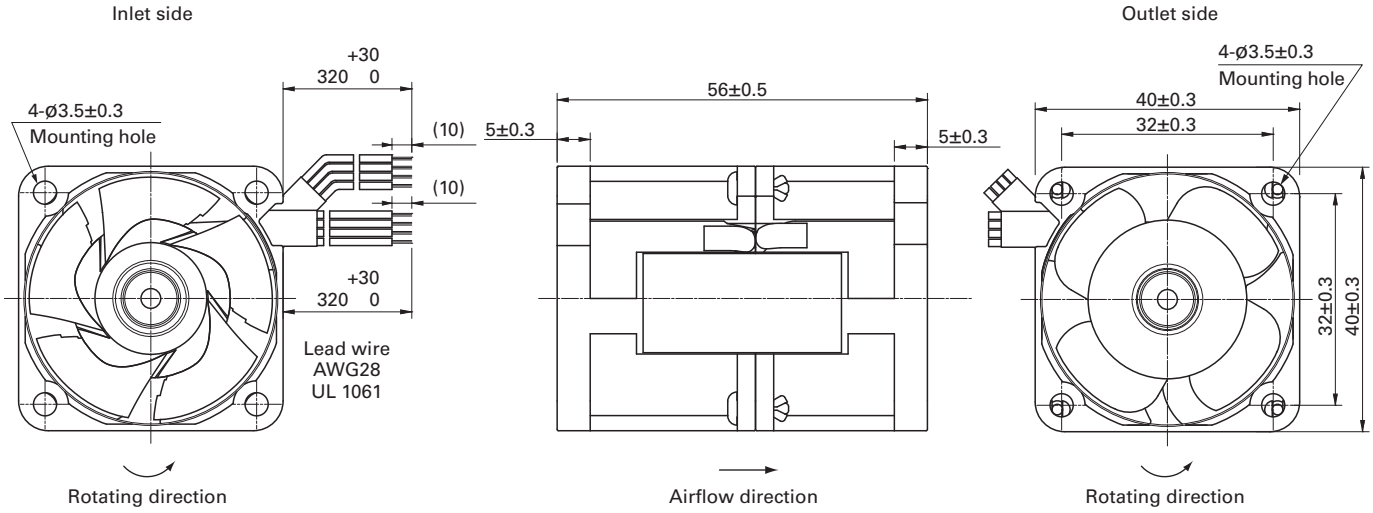

Reference Dimensions of Mounting Holes and Vent Opening (unit: mm)

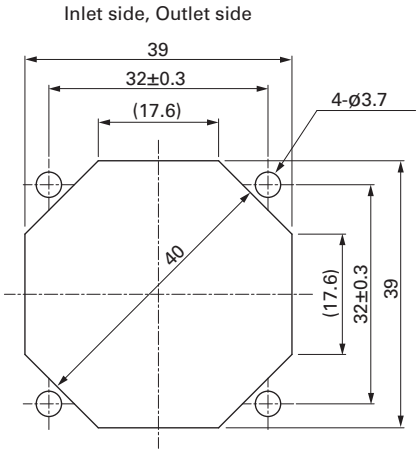

Options

Finger guards page: p. 584

Model no.: 109-059, 109-059H

Counter Rotating Fan

60×60×51 mm

San Ace 60 9CR type

General Specifications

- Material ..... Frame: Plastic (Flammability: UL 94V-0), Impeller: Plastic (Flammability: UL 94V-1)
- Expected life ..... See the table below. (L10 life: 90% survival rate for continuous operation in free air at 60˚C, rated voltage) Expected life at 40°C is for reference only.
- Motor protection function ..... Locked rotor burnout protection, Reverse polarity protection For details, please refer to p. 599.
- Dielectric strength ..... 50/60 Hz, 500 VAC, for 1 minute (between lead wire conductors and frame)
- Insulation resistance ..... 10 MΩ or more with a 500 VDC megger (between lead wire conductors and frame)
- Sound pressure level (SPL) ..... At 1 m away from the air inlet
- Storage temperature ..... -30 to +70˚C (Non-condensing)
- Lead wire ..... Inlet ⊕Red ⊖Black Sensor Yellow Control Brown
  Outlet ⊕Orange ⊖Gray Sensor Purple Control White
- Mass ..... 180 g

Specifications

The models listed below **have pulse sensors with PWM control function.**

Model no.	Rated voltage [V]	Operating voltage range [V]	PWM duty cycle* [%]	Rated current [A]	Rated input [W]	Rated speed [min⁻¹] Inlet	Rated speed [min⁻¹] Outlet	Max. airflow [m³/min]	Max. airflow [CFM]	Max. static pressure [Pa]	Max. static pressure [inchH₂O]	SPL [dB (A)]	Operating temperature [˚C]	Expected life [h]
9CR0612P5G03	12	10.8 to 13.2	100	2.7	32.4	11500	9000	2.03	71.7	600	2.41	68	-20 to +70	40000/60˚C (70000/40˚C)
			0	0.22	2.64	3000	2300	0.48	16.9	40	0.16	34		
9CR0612P5H03			100	2.0	24.0	10500	8200	1.85	65.4	500	2.01	65		
			0	0.22	2.64	3000	2300	0.48	16.9	40	0.16	34		

* PWM input frequency is 25 kHz; models without specifications at 0% PWM duty cycle have zero fan speed at 0%.

Note: Sensor and control options are available for selection. Refer to the table on p. 625.

Airflow - Static Pressure Characteristics / PWM Duty - Speed Characteristics Example

9CR0612P5G03 With pulse sensor with PWM control function

PWM duty cycle

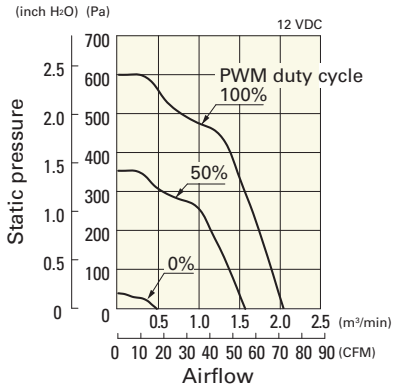

Operating voltage range

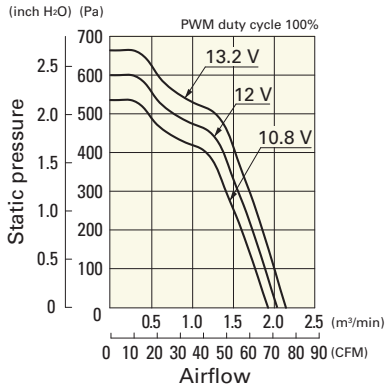

PWM duty - Speed characteristics example

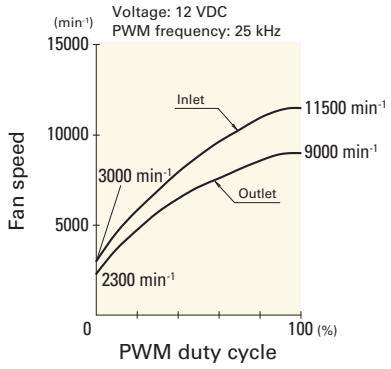

Airflow - Static Pressure Characteristics / PWM Duty - Speed Characteristics Example

9CR0612P5H03 With pulse sensor with PWM control function

PWM duty cycle

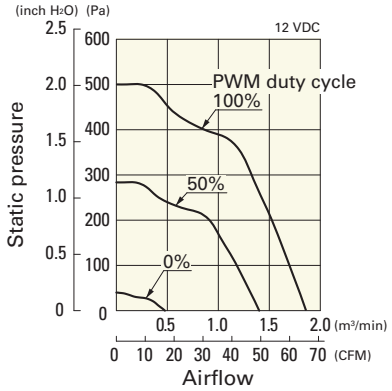

Operating voltage range

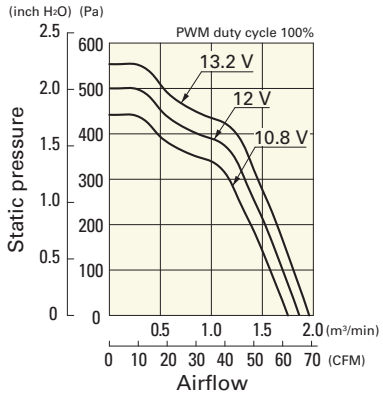

PWM duty - Speed characteristics example

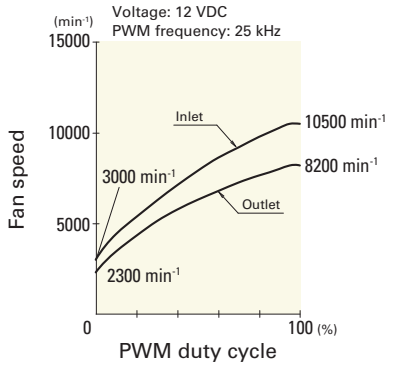

Dimensions (unit: mm)

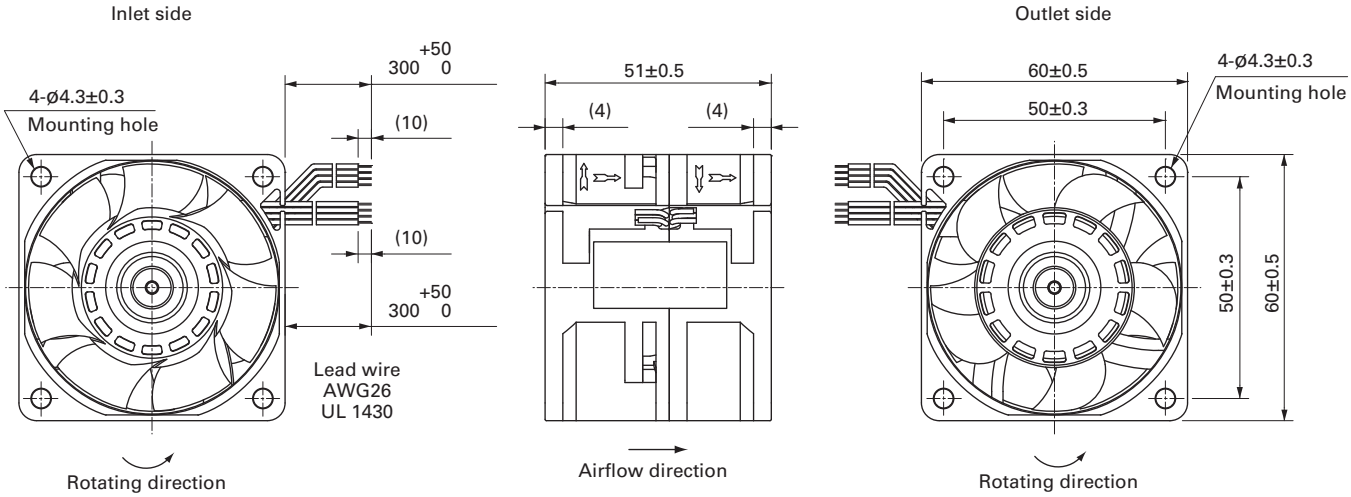

Reference Dimensions of Mounting Holes and Vent Opening (unit: mm)

Inlet side, Outlet side

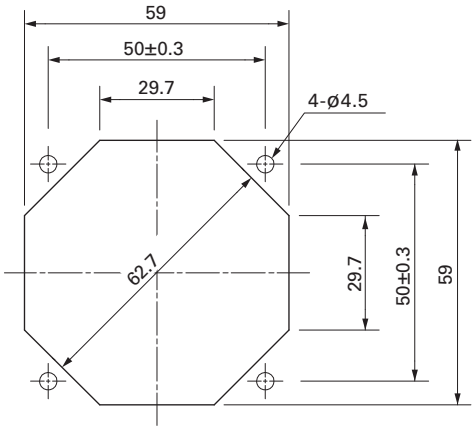

Options

Finger guards page: p. 584

Model no.: 109-139E, 109-139H

Resin finger guards page: p. 591

Model no.: 109-1003G

Resin filter kits page: p. 592

Model no.: 109-1003F13 (13PPI), 109-1003F20 (20PPI),
109-1003F30 (30PPI), 109-1003F40 (40PPI)

Counter Rotating Fan

60×60×56 mm

San Ace 60 9CRA type

General Specifications

- Material ..... Frame: Plastic (Flammability: UL 94V-0), Impeller: Plastic (Flammability: UL 94V-0)
- Expected life ..... See the table below. (L10 life: 90% survival rate for continuous operation in free air at 60˚C, rated voltage) Expected life at 40°C is for reference only.
- Motor protection function ..... Locked rotor burnout protection, Reverse polarity protection For details, please refer to p. 599.
- Dielectric strength ..... 50/60 Hz, 500 VAC, for 1 minute (between lead wire conductors and frame)
- Insulation resistance ..... 10 MΩ or more with a 500 VDC megger (between lead wire conductors and frame)
- Sound pressure level (SPL) ..... At 1 m away from the air inlet
- Storage temperature ..... -30 to +70˚C (Non-condensing)
- Lead wire ..... Inlet ⊕Red ⊖Black Sensor Yellow Control Brown
  Outlet ⊕Orange ⊖Gray Sensor Purple Control White
- Mass ..... 200 g

Specifications

The models listed below **have pulse sensors with PWM control function.**

Model no.	Rated voltage [V]	Operating voltage range [V]	PWM duty cycle* [%]	Rated current [A]	Rated input [W]	Rated speed [min⁻¹] Inlet	Rated speed [min⁻¹] Outlet	Max. airflow [m³/min]	Max. airflow [CFM]	Max. static pressure [Pa]	Max. static pressure [inchH₂O]	SPL [dB (A)]	Operating temperature [˚C]	Expected life [h]
9CRA0612P6K001	12	10.8 to 13.2	100	3.1	37.2	18300	15800	2.28	80.5	1130	4.54	73	-20 to +70	30000/60˚C (53000/40˚C)
			0	0.17	2.0	3800	3300	0.47	16.6	49	0.2	35		
9CRA0612P6J001			100	2.3	27.6	16800	14500	2.1	74.2	950	3.82	70		40000/60˚C (70000/40˚C)
			0	0.15	1.8	3800	3300	0.47	16.6	49	0.2	35		
9CRA0612P6G001			100	1.3	15.6	13500	11400	1.65	58.3	620	2.49	65		
			0	0.1	1.2	3000	2500	0.36	12.7	31	0.12	29		

* PWM input frequency is 25 kHz; models without specifications at 0% PWM duty cycle have zero fan speed at 0%.

Note: The » mark indicates Short Lead Time Service applicable models. See p. 654 for details.

Airflow - Static Pressure Characteristics / PWM Duty - Speed Characteristics Example

9CRA0612P6K001 With pulse sensor with PWM control function

PWM duty cycle

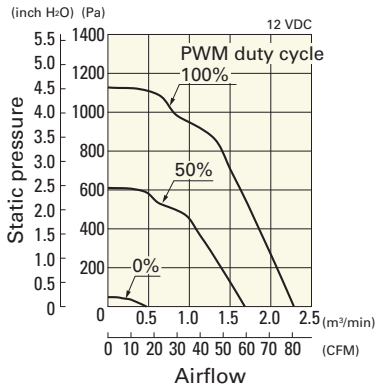

Operating voltage range

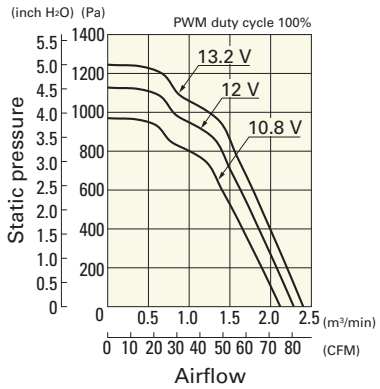

PWM duty - Speed characteristics example

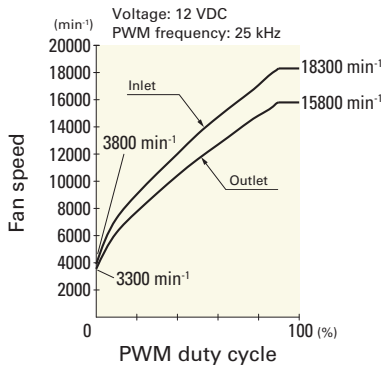

Airflow - Static Pressure Characteristics / PWM Duty - Speed Characteristics Example

9CRA0612P6J001 With pulse sensor with PWM control function

PWM duty cycle

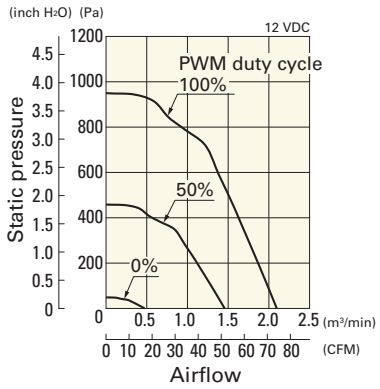

Operating voltage range

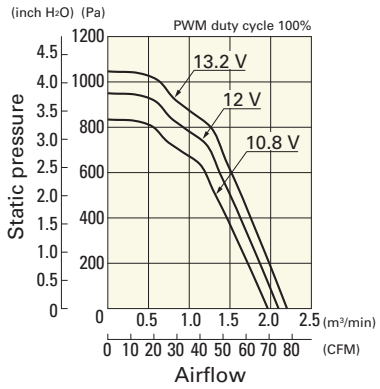

PWM duty - Speed characteristics example

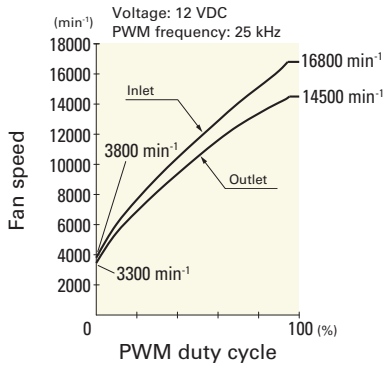

9CRA0612P6G001 With pulse sensor with PWM control function

PWM duty cycle

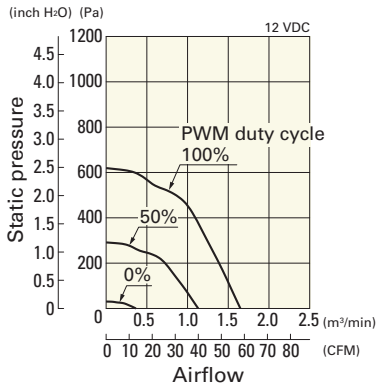

Operating voltage range

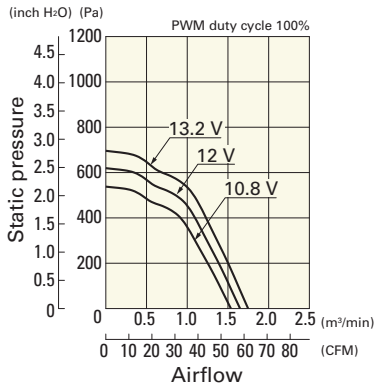

PWM duty - Speed characteristics example

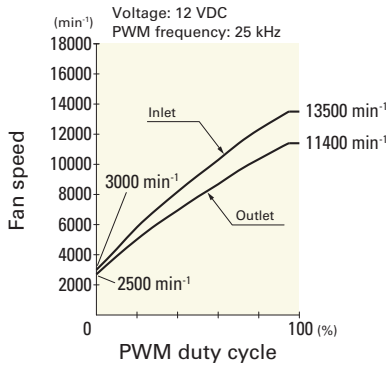

Dimensions (unit: mm)

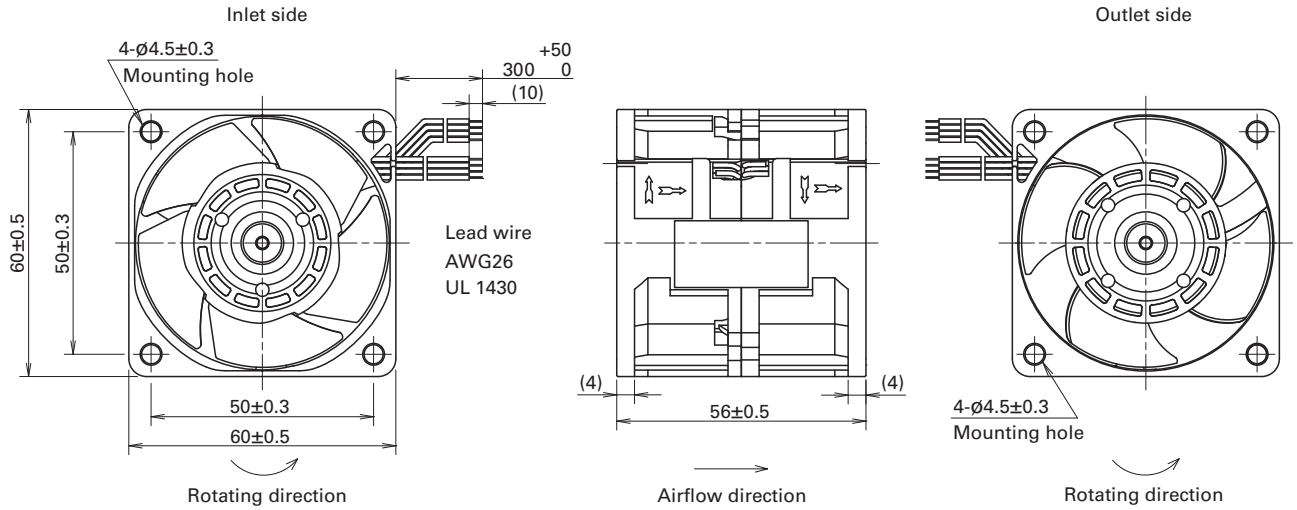

Reference Dimensions of Mounting Holes and Vent Opening (unit: mm)

Inlet side, Outlet side

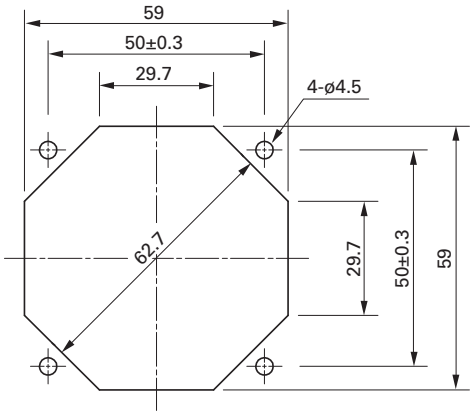

Options

Finger guards
page: p. 584

Model no.: 109-139E, 109-139H

Resin filter kits
page: p. 592

Model no.: 109-1003F13 (13PPI), 109-1003F20 (20PPI),
109-1003F30 (30PPI), 109-1003F40 (40PPI)

Resin finger guards
page: p. 591

Model no.: 109-1003G

60×60×76 mm

San Ace 60 9CRE type

General Specifications

- Material ..... Frame: Aluminum, Impeller: Plastic (Flammability: UL 94V-1)
- Expected life ..... See the table below. (L10 life: 90% survival rate for continuous operation in free air at 60˚C, rated voltage) Expected life at 40°C is for reference only.
- Motor protection function ..... Locked rotor burnout protection, Reverse polarity protection For details, please refer to p. 599.
- Dielectric strength ..... 50/60 Hz, 500 VAC, for 1 minute (between lead wire conductors and frame)
- Insulation resistance ..... 10 MΩ or more with a 500 VDC megger (between lead wire conductors and frame)
- Sound pressure level (SPL) ..... At 1 m away from the air inlet
- Storage temperature ..... -30 to +70˚C (Non-condensing)
- Lead wire ..... Inlet ⊕Red ⊖Black Sensor Yellow Control Brown
  Outlet ⊕Orange ⊖Gray Sensor Purple Control White
- Mass ..... 300 g

Specifications

The models listed below **have pulse sensors with PWM control function.**

Model no.	Rated voltage [V]	Operating voltage range [V]	PWM duty cycle* [%]	Rated current [A]	Rated input [W]	Rated speed [min⁻¹] Inlet	Rated speed [min⁻¹] Outlet	Max. airflow [m³/min]	Max. airflow [CFM]	Max. static pressure [Pa]	Max. static pressure [inchH₂O]	SPL [dB (A)]	Operating temperature [˚C]	Expected life [h]
9CRE0612P0G001	12	10.8 to 13.2	100	2.3	27.6	16500	13000	2.0	70.6	1000	4.0	66	-20 to +70	40000/60˚C (70000/40˚C)
			0	0.22	2.7	3600	2800	0.43	15.1	47.6	0.19	32		

* PWM input frequency is 25 kHz; models without specifications at 0% PWM duty cycle have zero fan speed at 0%.

Airflow - Static Pressure Characteristics / PWM Duty - Speed Characteristics Example

9CRE0612P0G001 With pulse sensor with PWM control function

PWM duty cycle

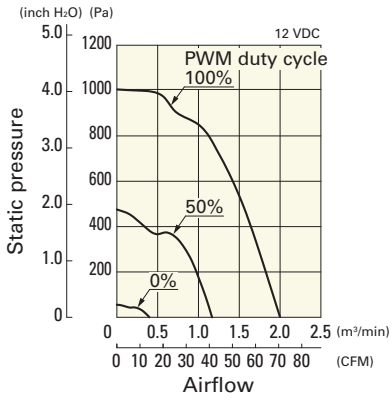

Operating voltage range

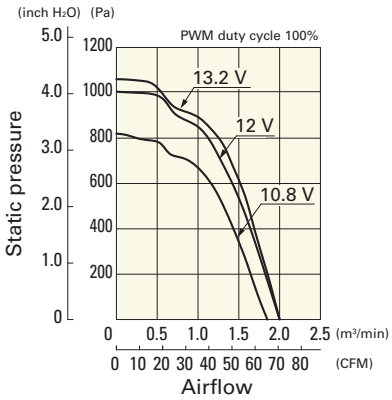

PWM duty - Speed characteristics example

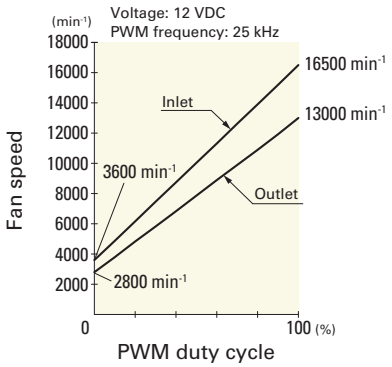

Dimensions (unit: mm)

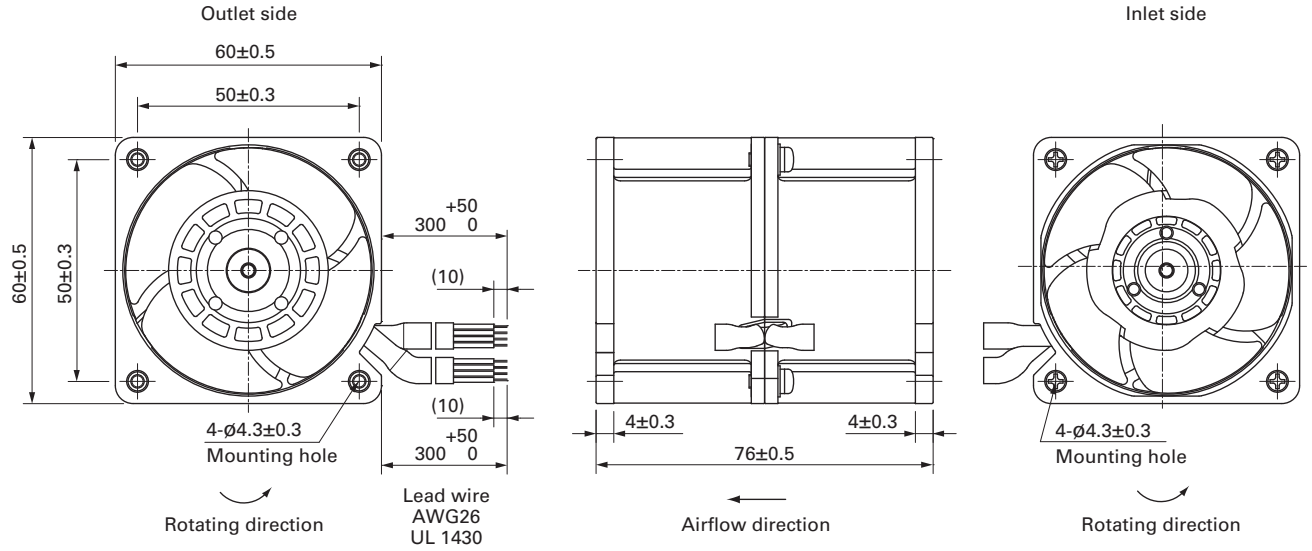

Reference Dimensions of Mounting Holes and Vent Opening (unit: mm)

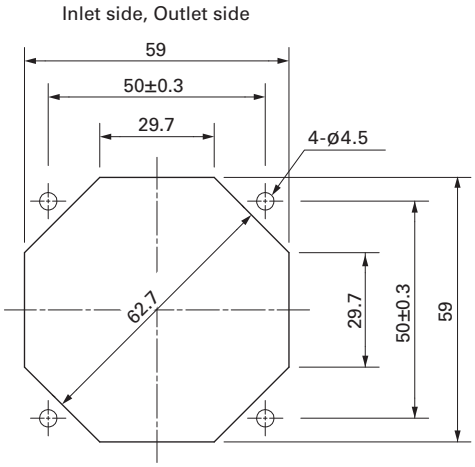

Options

Finger guards page: p. 584

Model no.: 109-139E, 109-139H

Resin finger guards page: p. 591

Model no.: 109-1003G

Resin filter kits page: p. 592

Model no.: 109-1003F13 (13PPI), 109-1003F20 (20PPI),
109-1003F30 (30PPI), 109-1003F40 (40PPI)

60×60×76 mm

San Ace 60 9CRA type

General Specifications

- Material ..... Frame: Plastic (Flammability: UL 94V-0), Impeller: Plastic (Flammability: UL 94V-0)
- Expected life ..... See the table below. (L10 life: 90% survival rate for continuous operation in free air at 60˚C, rated voltage) Expected life at 40°C is for reference only.
- Motor protection function ..... Locked rotor burnout protection, Reverse polarity protection For details, please refer to p. 599.
- Dielectric strength ..... 50/60 Hz, 500 VAC, for 1 minute (between lead wire conductors and frame)
- Insulation resistance ..... 10 MΩ or more with a 500 VDC megger (between lead wire conductors and frame)
- Sound pressure level (SPL) ..... At 1 m away from the air inlet
- Storage temperature ..... -30 to +70˚C (Non-condensing)
- Lead wire ..... Inlet ⊕Red ⊖Black Sensor Yellow Control Brown
  Outlet ⊕Orange ⊖Gray Sensor Purple Control White
- Mass ..... 270 g

Specifications

The models listed below **have pulse sensors with PWM control function.**

Model no.	Rated voltage [V]	Operating voltage range [V]	PWM duty cycle* [%]	Rated current [A]	Rated input [W]	Rated speed [min⁻¹] Inlet	Rated speed [min⁻¹] Outlet	Max. airflow [m³/min]	Max. airflow [CFM]	Max. static pressure [Pa]	Max. static pressure [inchH₂O]	SPL [dB (A)]	Operating temperature [˚C]	Expected life [h]
9CRA0612P0G001	12	10.8 to 13.2	100	2.3	27.6	16500	13000	2.0	70.6	1000	4.0	66	-20 to +70	40000/60˚C (70000/40˚C)
			0	0.22	2.7	3600	2800	0.43	15.1	47.6	0.19	32		
9CRA0612P0S001			100	1.5	18.0	14000	11000	1.7	60.0	720	2.89	63		
			0	0.17	2.1	3200	2500	0.38	13.4	37.6	0.15	29		

* PWM input frequency is 25 kHz; models without specifications at 0% PWM duty cycle have zero fan speed at 0%.

Note: The » mark indicates Short Lead Time Service applicable models. See p. 654 for details.

Airflow - Static Pressure Characteristics / PWM Duty - Speed Characteristics Example

9CRA0612P0G001 With pulse sensor with PWM control function

PWM duty cycle

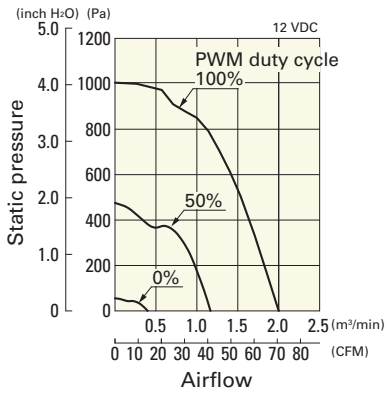

Operating voltage range

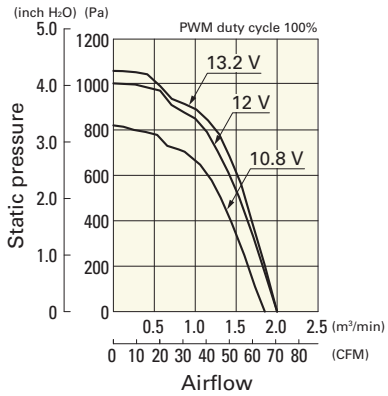

PWM duty - Speed characteristics example

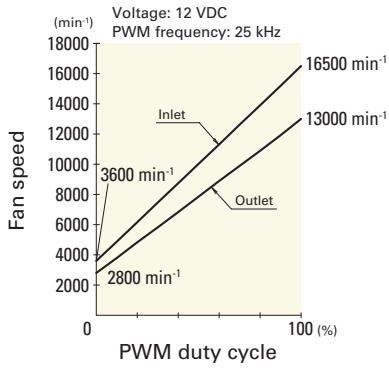

Airflow - Static Pressure Characteristics / PWM Duty - Speed Characteristics Example

9CRA0612P0S001 With pulse sensor with PWM control function

PWM duty cycle

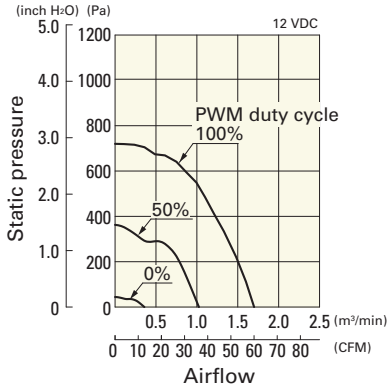

Operating voltage range

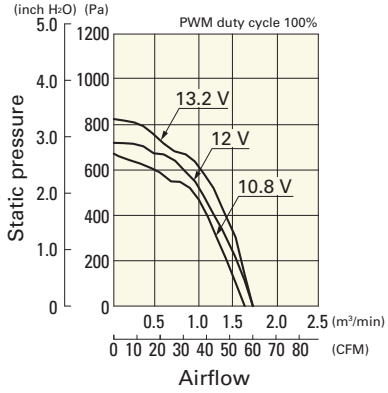

PWM duty - Speed characteristics example

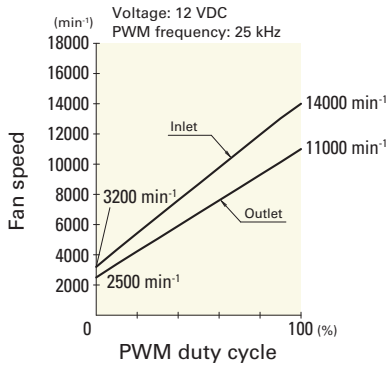

Dimensions (unit: mm)

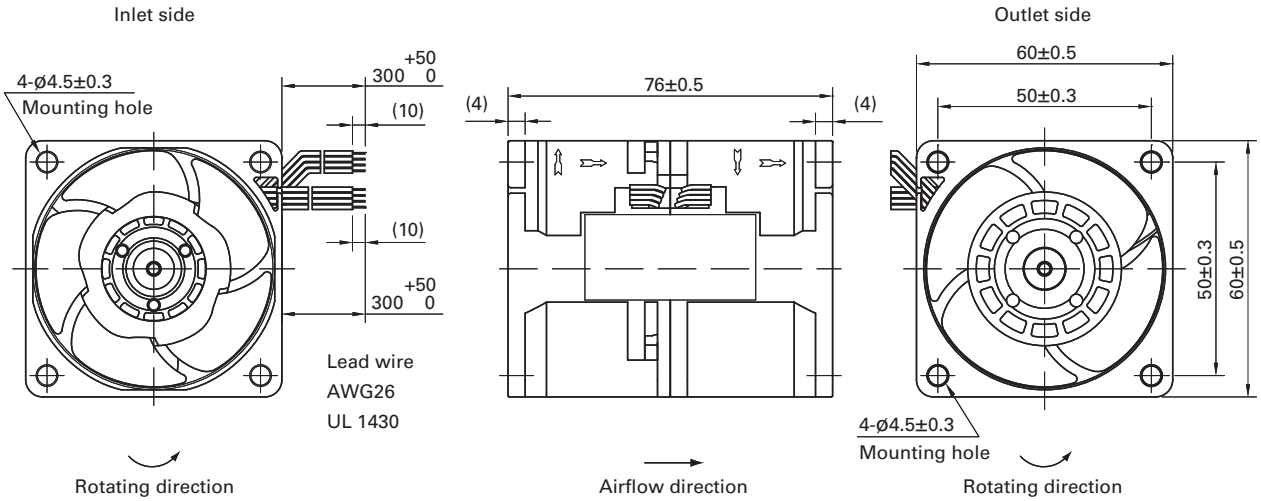

Reference Dimensions of Mounting Holes and Vent Opening (unit: mm)

Inlet side, Outlet side

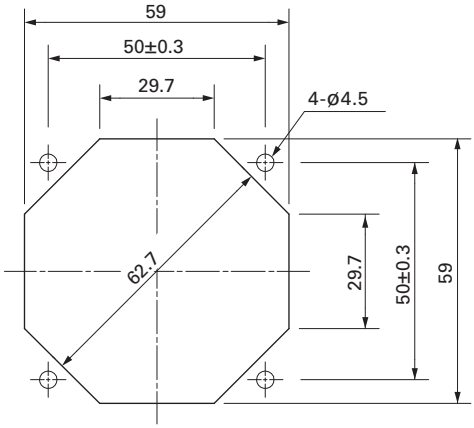

Options

Finger guards page: p. 584

Model no.: 109-139E, 109-139H

Resin finger guards page: p. 591

Model no.: 109-1003G

Resin filter kits page: p. 592

Model no.: 109-1003F13 (13PPI), 109-1003F20 (20PPI),
109-1003F30 (30PPI), 109-1003F40 (40PPI)

80×80×80 mm

San Ace 80 9CRB type

General Specifications

- Material ..... Frame: Plastic (Flammability: UL 94V-0), Impeller: Plastic (Flammability: UL 94V-0)
- Expected life ..... See the table below. (L10 life: 90% survival rate for continuous operation in free air at 60˚C, rated voltage) Expected life at 40°C is for reference only.
- Motor protection function ..... Locked rotor burnout protection, Reverse polarity protection For details, please refer to p. 599.
- Dielectric strength ..... 50/60 Hz, 500 VAC, for 1 minute (between lead wire conductors and frame)
- Insulation resistance ..... 10 MΩ or more with a 500 VDC megger (between lead wire conductors and frame)
- Sound pressure level (SPL) ..... At 1 m away from the air inlet
- Storage temperature ..... -30 to +70˚C (Non-condensing)
- Lead wire ..... Inlet ⊕Red ⊖Black Sensor Yellow Control Brown
  Outlet ⊕Orange ⊖Gray Sensor Purple Control White
- Mass ..... 430 g

Specifications

The models listed below **have pulse sensors with PWM control function.**

Model no.	Rated voltage [V]	Operating voltage range [V]	PWM duty cycle* [%]	Rated current [A]	Rated input [W]	Rated speed [min⁻¹] Inlet	Rated speed [min⁻¹] Outlet	Max. airflow [m³/min]	Max. airflow [CFM]	Max. static pressure [Pa]	Max. static pressure [inchH₂O]	SPL [dB (A)]	Operating temperature [˚C]	Expected life [h]
9CRB0812P8G001	12	10.8 to 13.2	100	9.2	110.4	14600	12200	5.5	194	1150	4.6	80	-20 to +70	40000/60˚C (70000/40˚C)
			20	0.17	2.04	2000	1670	0.7	24.7	21.6	0.09	24		

* PWM input frequency is 25 kHz; models without specifications at 0% PWM duty cycle have zero fan speed at 0%.

Note: The » mark indicates Short Lead Time Service applicable models. See p. 654 for details.

Airflow - Static Pressure Characteristics / PWM Duty - Speed Characteristics Example

9CRB0812P8G001 With pulse sensor with PWM control function

PWM duty cycle

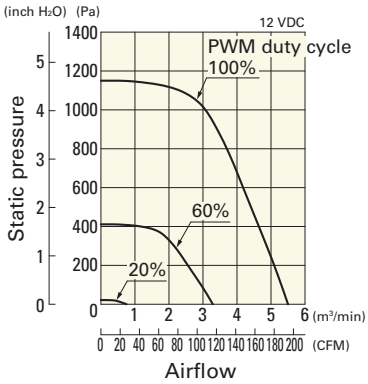

Operating voltage range

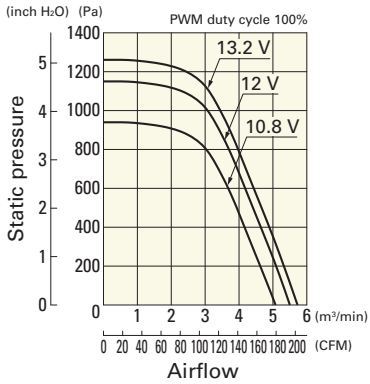

PWM duty - Speed characteristics example

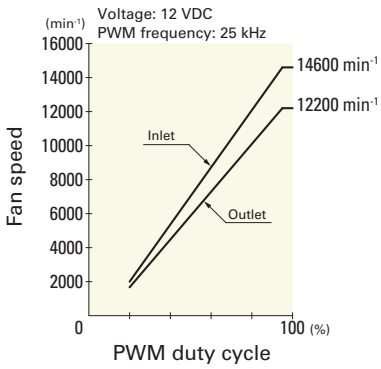

Dimensions (unit: mm)

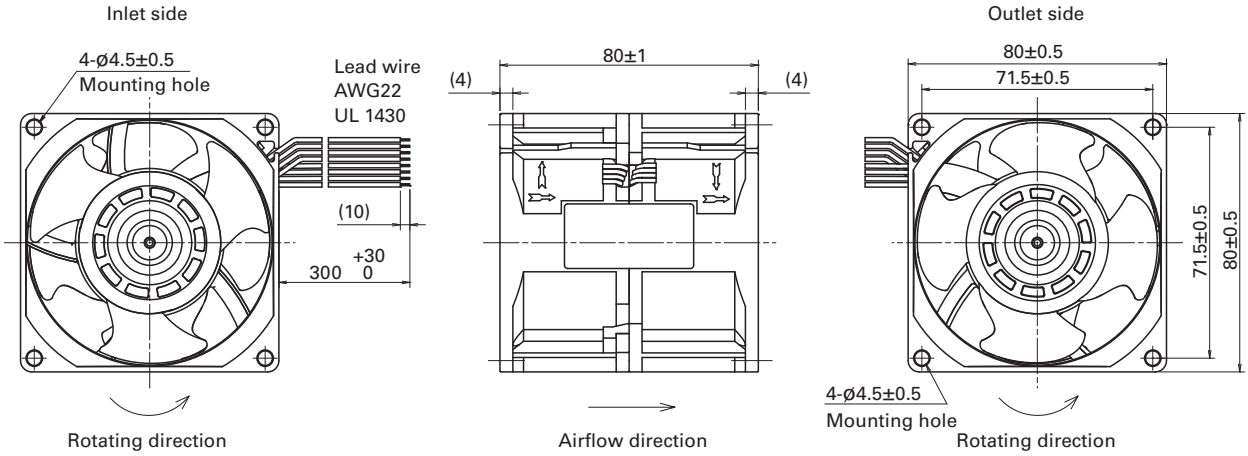

Reference Dimensions of Mounting Holes and Vent Opening (unit: mm)

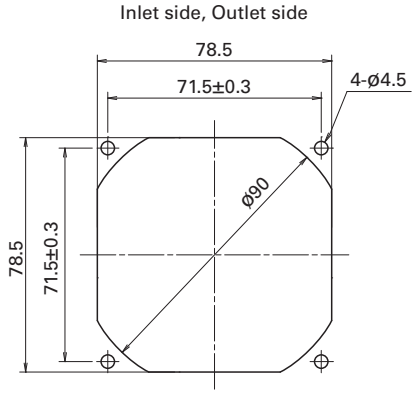

Options

Finger guards page: p. 584

Model no.: 109-049E, 109-049H

Resin finger guards page: p. 591

Model no.: 109-1002G

Resin filter kits page: p. 592

Model no.: 109-1002F13 (13PPI), 109-1002F20 (20PPI),
109-1002F30 (30PPI), 109-1002F40 (40PPI)

80×80×80 mm

San Ace 80 9CRE type

General Specifications

- Material ..... Frame: Aluminum, Impeller: Plastic (Flammability: UL 94V-1)
- Expected life ..... See the table below. (L10 life: 90% survival rate for continuous operation in free air at 60˚C, rated voltage) Expected life at 40°C is for reference only.
- Motor protection function ..... Locked rotor burnout protection, Reverse polarity protection For details, please refer to p. 599.
- Dielectric strength ..... 50/60 Hz, 500 VAC, for 1 minute (between lead wire conductors and frame)
- Insulation resistance ..... 10 MΩ or more with a 500 VDC megger (between lead wire conductors and frame)
- Sound pressure level (SPL) ..... At 1 m away from the air inlet
- Storage temperature ..... -30 to +70˚C (Non-condensing)
- Lead wire ..... Inlet ⊕Red ⊖Black Sensor Yellow Control Brown
  Outlet ⊕Orange ⊖Gray Sensor Purple Control White
- Mass ..... 490 g

Specifications

The models listed below **have pulse sensors with PWM control function.**

Model no.	Rated voltage [V]	Operating voltage range [V]	PWM duty cycle* [%]	Rated current [A]	Rated input [W]	Rated speed [min⁻¹] Inlet	Rated speed [min⁻¹] Outlet	Max. airflow [m³/min]	Max. airflow [CFM]	Max. static pressure [Pa]	Max. static pressure [inchH₂O]	SPL [dB (A)]	Operating temperature [˚C]	Expected life [h]
9CRE0812P8G001	12	10.8 to 13.2	100	5.3	63.6	12000	11300	4.5	158.9	1150	4.62	76	-20 to +70	40000/60˚C (70000/40˚C)
			0	0.2	2.4	2000	1900	0.74	26.1	31.9	0.13	30		

* PWM input frequency is 25 kHz; models without specifications at 0% PWM duty cycle have zero fan speed at 0%.

Airflow - Static Pressure Characteristics / PWM Duty - Speed Characteristics Example

9CRE0812P8G001 With pulse sensor with PWM control function

PWM duty cycle

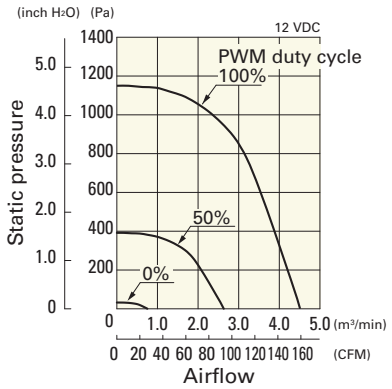

Operating voltage range

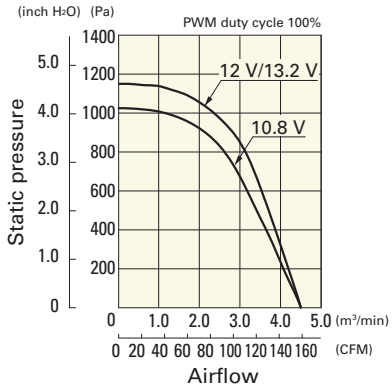

PWM duty - Speed characteristics example

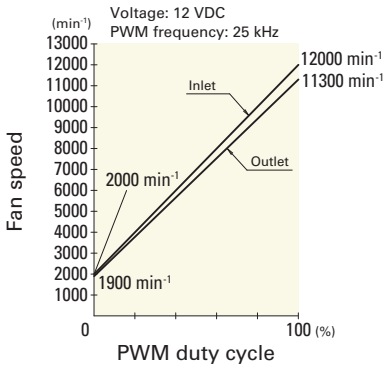

Dimensions (unit: mm)

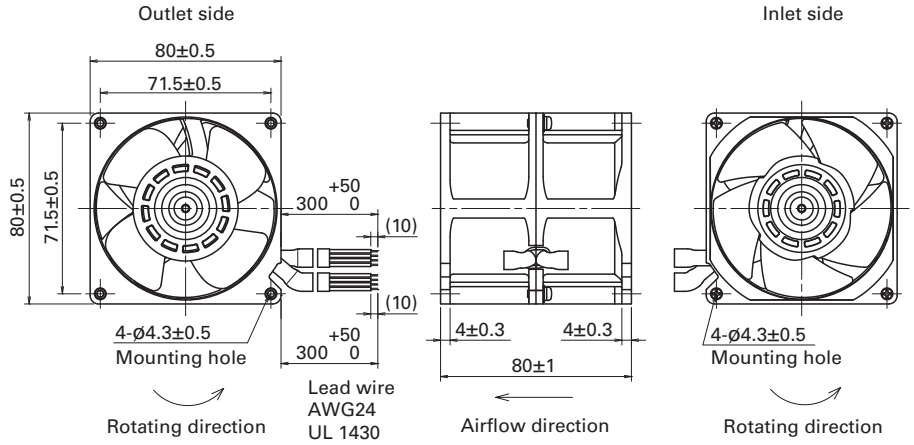

Reference Dimensions of Mounting Holes and Vent Opening (unit: mm)

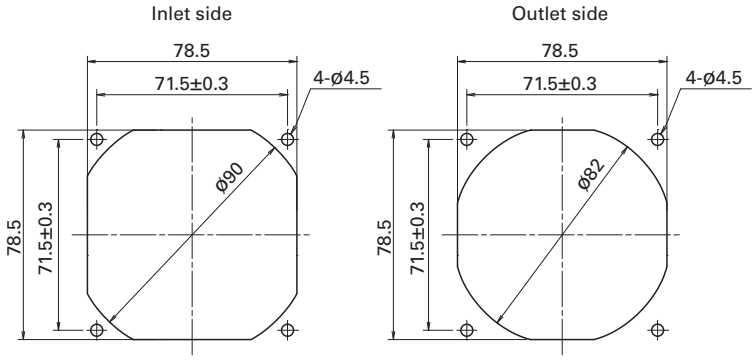

Options

Finger guards page: p. 584

Model no.: 109-049E, 109-049H

Resin filter kits page: p. 592

Model no.: 109-1002F13 (13PPI), 109-1002F20 (20PPI),
109-1002F30 (30PPI), 109-1002F40 (40PPI)

Resin finger guards page: p. 591

Model no.: 109-1002G

80×80×80 mm

San Ace 80 9CRA type

General Specifications

- Material ..... Frame: Plastic (Flammability: UL 94V-0), Impeller: Plastic (Flammability: UL 94V-0)
- Expected life ..... See the table below. (L10 life: 90% survival rate for continuous operation in free air at 60˚C, rated voltage) Expected life at 40°C is for reference only.
- Motor protection function ..... Locked rotor burnout protection, Reverse polarity protection For details, please refer to p. 599.
- Dielectric strength ..... 50/60 Hz, 500 VAC, for 1 minute (between lead wire conductors and frame)
- Insulation resistance ..... 10 MΩ or more with a 500 VDC megger (between lead wire conductors and frame)
- Sound pressure level (SPL) ..... At 1 m away from the air inlet
- Storage temperature ..... -30 to +70˚C (Non-condensing)
- Lead wire ..... Inlet ⊕Red ⊖Black Sensor Yellow Control Brown
  Outlet ⊕Orange ⊖Gray Sensor Purple Control White
- Mass ..... 450 g

Specifications

The models listed below **have pulse sensors with PWM control function.**

Model no.	Rated voltage [V]	Operating voltage range [V]	PWM duty cycle* [%]	Rated current [A]	Rated input [W]	Rated speed [min⁻¹] Inlet	Rated speed [min⁻¹] Outlet	Max. airflow [m³/min]	Max. airflow [CFM]	Max. static pressure [Pa]	Max. static pressure [inchH₂O]	SPL [dB (A)]	Operating temperature [˚C]	Expected life [h]
9CRA0812P8G001	12	10.8 to 13.2	100	5.3	63.6	12000	11300	4.5	158.9	1150	4.62	76	-20 to +70	40000/60˚C (70000/40˚C)
			0	0.2	2.4	2000	1900	0.74	26.1	31.9	0.13	30		
9CRA0824P8G001	24	21.6 to 26.4	100	2.65	63.6	12000	11300	4.5	158.9	1150	4.62	76		
			0	0.09	2.16	2000	1900	0.74	26.1	31.9	0.13	30		
9CRA0848P8G001	48	40.8 to 55.2	100	1.32	63.4	12000	11300	4.5	158.9	1150	4.62	76		
			0	0.29	13.9	5000	4700	1.88	66.2	200	0.8	52		

* PWM input frequency is 25 kHz; models without specifications at 0% PWM duty cycle have zero fan speed at 0%.

Note 1: Sensor and control options are available for selection. Refer to the table on p. 625.
Note 2: The » mark indicates Short LeadTime Service applicable models. See p. 654 for details.

Airflow - Static Pressure Characteristics / PWM Duty - Speed Characteristics Example

9CRA0812P8G001 With pulse sensor with PWM control function

PWM duty cycle

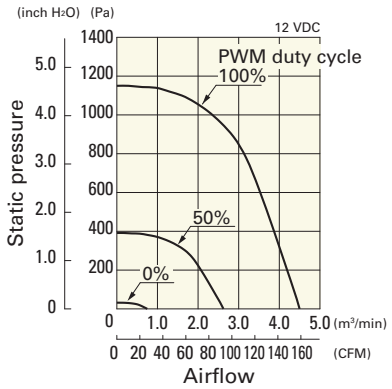

Operating voltage range

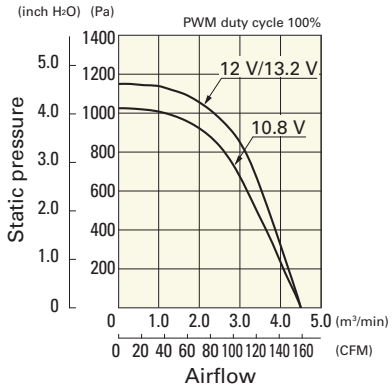

PWM duty - Speed characteristics example

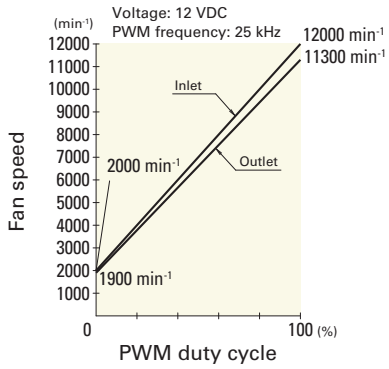

Airflow - Static Pressure Characteristics / PWM Duty - Speed Characteristics Example

9CRA0824P8G001 With pulse sensor with PWM control function

PWM duty cycle

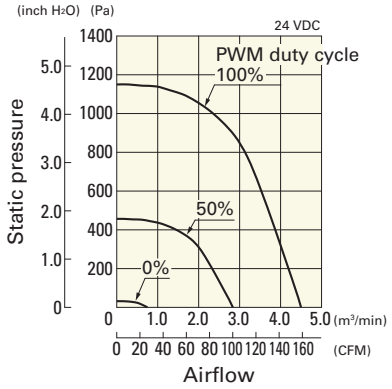

Operating voltage range

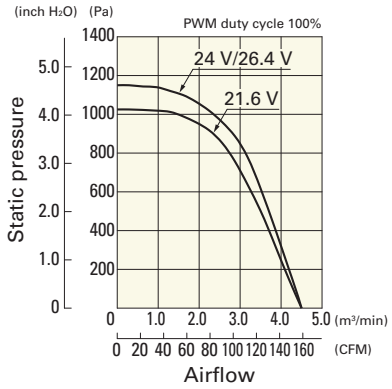

PWM duty - Speed characteristics example

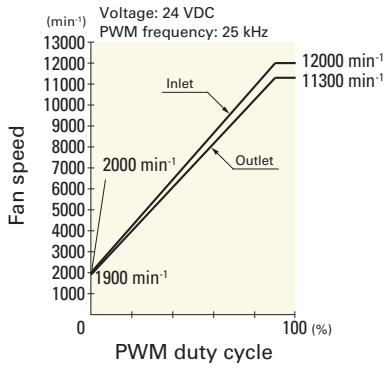

9CRA0848P8G001 With pulse sensor with PWM control function

PWM duty cycle

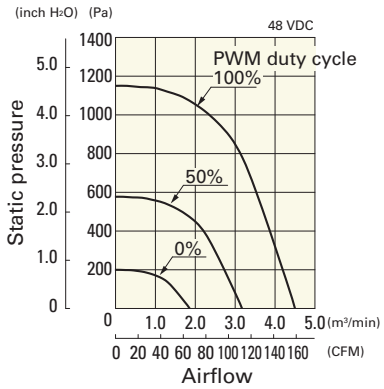

Operating voltage range

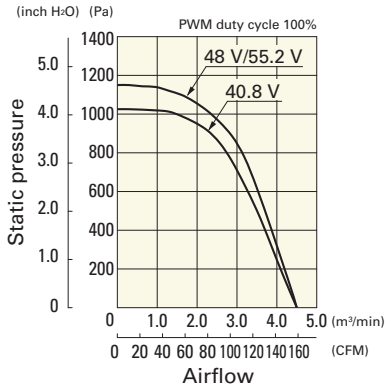

PWM duty - Speed characteristics example

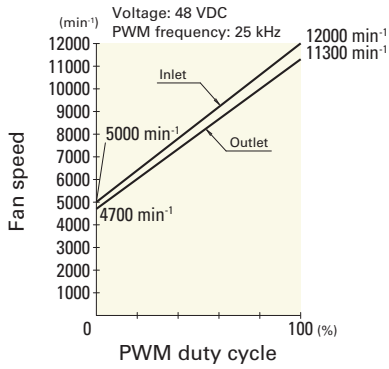

Dimensions (unit: mm)

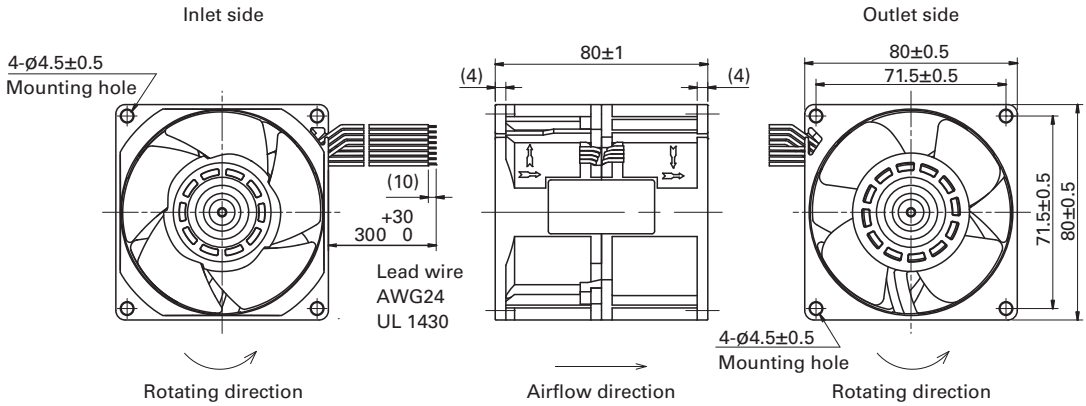

Reference Dimensions of Mounting Holes and Vent Opening (unit: mm)

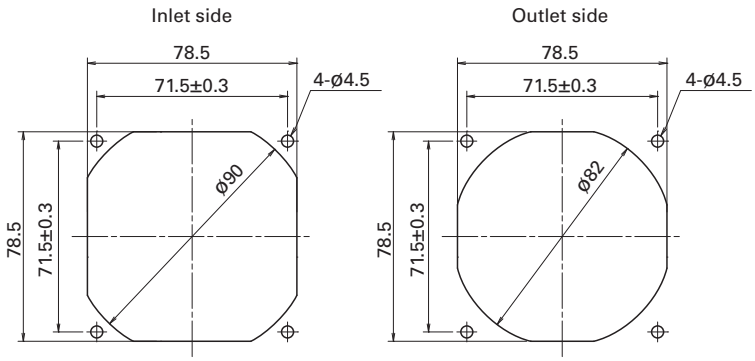

Options

Finger guards
page: p. 584

Model no.: 109-049E, 109-049H

Resin filter kits
page: p. 592

Model no.: 109-1002F13 (13PPI), 109-1002F20 (20PPI),
109-1002F30 (30PPI), 109-1002F40 (40PPI)

Resin finger guards
page: p. 591

Model no.: 109-1002G

Counter Rotating Fan

92×92×76 mm

San Ace 92 9CRA type

General Specifications

- Material ..... Frame: Plastic (Flammability: UL 94V-0), Impeller: Plastic (Flammability: UL 94V-0)
- Expected life ..... See the table below. (L10 life: 90% survival rate for continuous operation in free air at 60˚C, rated voltage) Expected life at 40°C is for reference only.
- Motor protection function ..... Locked rotor burnout protection, Reverse polarity protection For details, please refer to p. 599.
- Dielectric strength ..... 50/60 Hz, 500 VAC, for 1 minute (between lead wire conductors and frame)
- Insulation resistance ..... 10 MΩ or more with a 500 VDC megger (between lead wire conductors and frame)
- Sound pressure level (SPL) ..... At 1 m away from the air inlet
- Storage temperature ..... -30 to +70˚C (Non-condensing)
- Lead wire ..... Inlet ⊕Red ⊖Black Sensor Yellow Control Brown
  Outlet ⊕Orange ⊖Gray Sensor Purple Control White
- Mass ..... 510 g

Specifications

The models listed below **have pulse sensors with PWM control function.**

Model no.	Rated voltage [V]	Operating voltage range [V]	PWM duty cycle* [%]	Rated current [A]	Rated input [W]	Rated speed [min⁻¹] Inlet	Rated speed [min⁻¹] Outlet	Max. airflow [m³/min]	Max. airflow [CFM]	Max. static pressure [Pa]	Max. static pressure [inchH₂O]	SPL [dB (A)]	Operating temperature [˚C]	Expected life [h]
9CRA0912P0G001	12	10.2 to 13.2	100	9.0	108.0	13300	12200	5.8	205	1650	6.63	81	-20 to +70	40000/60˚C (70000/40˚C)
			20	0.42	5.04	3500	3200	1.48	52.3	140	0.56	47		
9CRA0948P0G601	48	36 to 60	100	2.2	105.6	13300	12200	5.8	205	1650	6.63	81		
			20	0.15	7.2	3500	3200	1.48	52.3	140	0.56	47		

* PWM input frequency is 25 kHz; models without specifications at 0% PWM duty cycle have zero fan speed at 0%.

Note: The » mark indicates Short Lead Time Service applicable models. See p. 654 for details.

Airflow - Static Pressure Characteristics / PWM Duty - Speed Characteristics Example

9CRA0912P0G001 With pulse sensor with PWM control function

PWM duty cycle

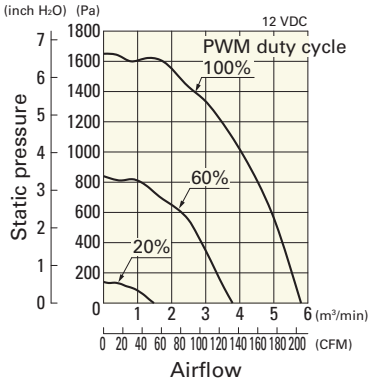

Operating voltage range

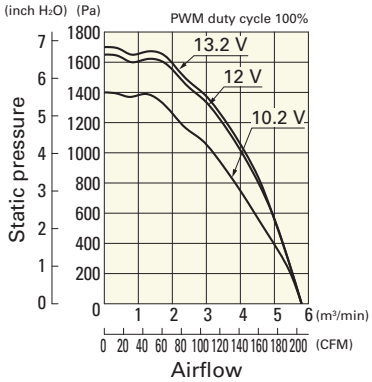

PWM duty - Speed characteristics example

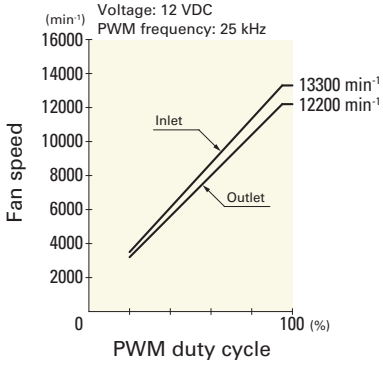

Airflow - Static Pressure Characteristics / PWM Duty - Speed Characteristics Example

9CRA0948P0G601 With pulse sensor with PWM control function

PWM duty cycle

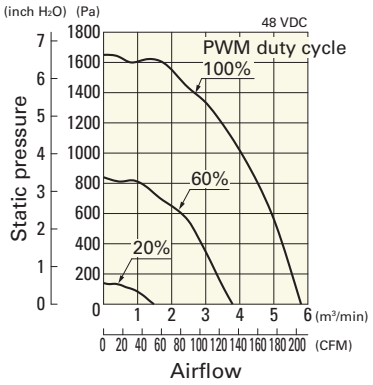

Operating voltage range

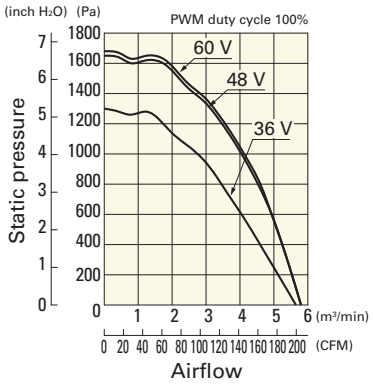

PWM duty - Speed characteristics example

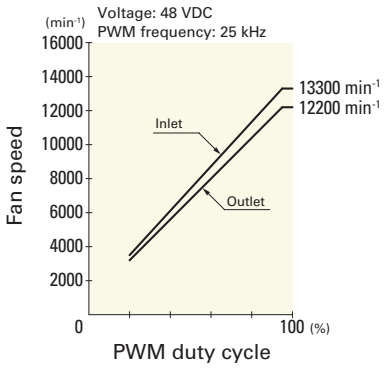

Dimensions (unit: mm)

Inlet side

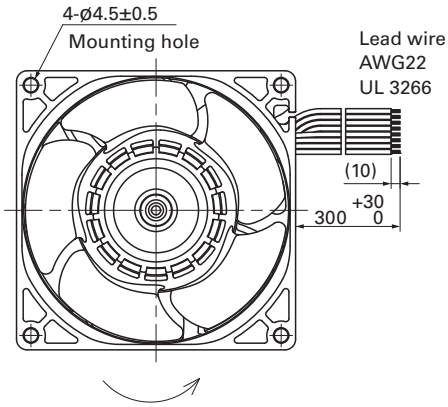

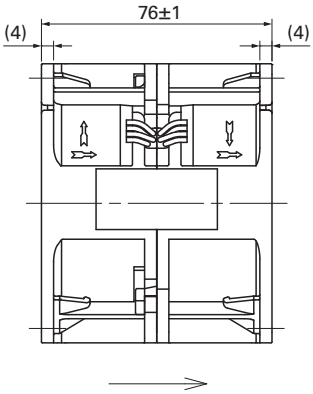

Outlet side

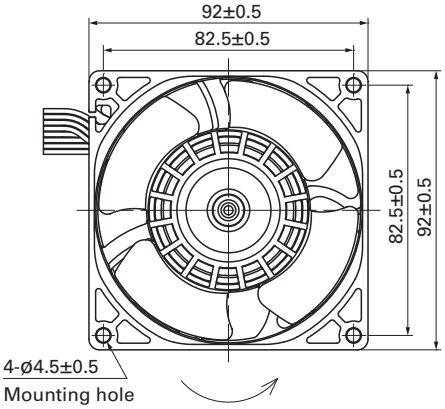

Reference Dimensions of Mounting Holes and Vent Opening (unit: mm)

Inlet side, Outlet side

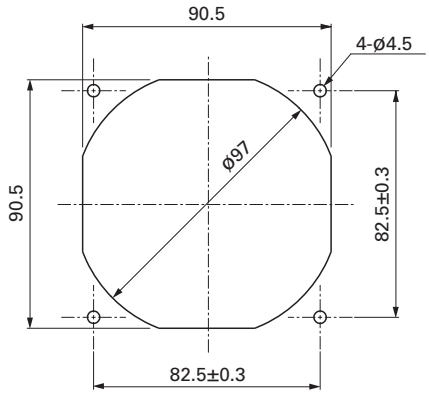

Options

Finger guards page: p. 584

Model no.: 109-099E, 109-099H

Resin finger guards page: p. 591

Model no.: 109-1001G

Resin filter kits page: p. 592

Model no.: 109-1001F13 (13PPI), 109-1001F20 (20PPI),
109-1001F30 (30PPI), 109-1001F40 (40PPI)

Counter Rotating Fan

120×120×76 mm

San Ace 120 9CR type

General Specifications

- Material ..... Frame: Plastic (Flammability: UL 94V-0), Impeller: Plastic (Flammability: UL 94V-1)
- Expected life ..... See the table below. (L10 life: 90% survival rate for continuous operation in free air at 60˚C, rated voltage) Expected life at 40°C is for reference only.
- Motor protection function ..... Locked rotor burnout protection, Reverse polarity protection For details, please refer to p. 599.
- Dielectric strength ..... 50/60 Hz, 500 VAC, for 1 minute (between lead wire conductors and frame)
- Insulation resistance ..... 10 MΩ or more with a 500 VDC megger (between lead wire conductors and frame)
- Sound pressure level (SPL) ..... At 1 m away from the air inlet
- Storage temperature ..... -30 to +70˚C (Non-condensing)
- Lead wire ..... Inlet ⊕Red ⊖Black Sensor Yellow Control Brown
  Outlet ⊕Orange ⊖Gray Sensor Purple Control White
- Mass ..... 670 g

Specifications

The models listed below **have pulse sensors with PWM control function.**

Model no.	Rated voltage [V]	Operating voltage range [V]	PWM duty cycle* [%]	Rated current [A]	Rated input [W]	Rated speed [min⁻¹] Inlet	Rated speed [min⁻¹] Outlet	Max. airflow [m³/min]	Max. airflow [CFM]	Max. static pressure [Pa]	Max. static pressure [inchH₂O]	SPL [dB (A)]	Operating temperature [˚C]	Expected life [h]
9CR1212P0G03	12	10.8 to 13.2	100	7.2	86.4	6200	3800	8.5	300	480	1.93	70	-20 to +60	40000/60˚C (70000/40˚C)
			0	1.1	13.2	2700	1800	3.8	134	95	0.38	51		

* PWM input frequency is 25 kHz; models without specifications at 0% PWM duty cycle have zero fan speed at 0%.

Note: Sensor and control options are available for selection. Refer to the table on p. 625.

Airflow - Static Pressure Characteristics / PWM Duty - Speed Characteristics Example

9CR1212P0G03 With pulse sensor with PWM control function

PWM duty cycle

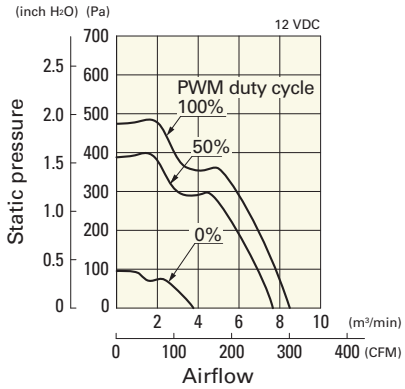

Operating voltage range

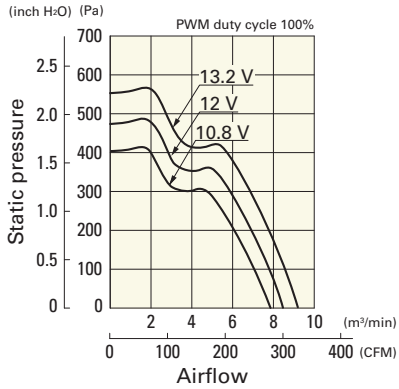

PWM duty - Speed characteristics example

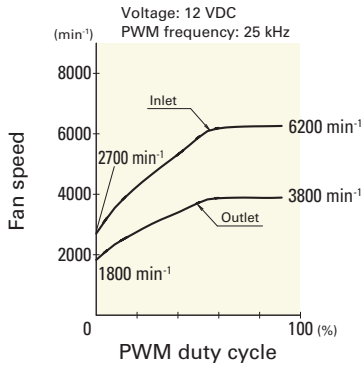

Dimensions (unit: mm)

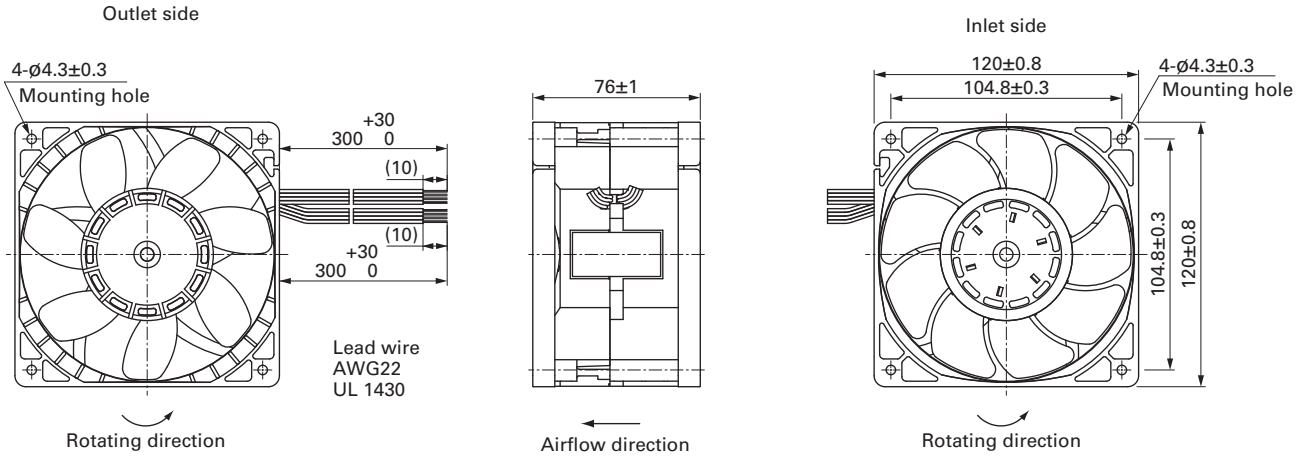

Reference Dimensions of Mounting Holes and Vent Opening (unit: mm)

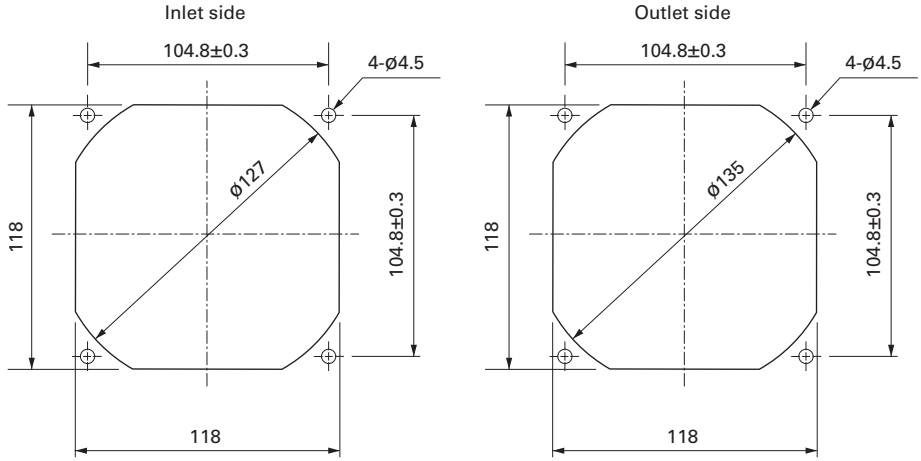

Options

Finger guards page: p. 585

Model no.: 109-019E, 109-019K

Resin finger guards page: p. 591

Model no.: 109-1000G

Resin filter kits page: p. 592

Model no.: 109-1000F13 (13PPI), 109-1000F20 (20PPI),
109-1000F30 (30PPI), 109-1000F40 (40PPI)

Counter Rotating Fan

ø172×150×102 mm

San Ace 172 9CR type

Sidecut type

General Specifications

- Material ..... Frame: Aluminum, Impeller: Plastic (Flammability: UL 94V-0)
- Expected life ..... See the table below. (L10 life: 90% survival rate for continuous operation in free air at 60˚C, rated voltage) Expected life at 40°C is for reference only.
- Motor protection function ..... Locked rotor burnout protection, Reverse polarity protection For details, please refer to p. 599.
- Dielectric strength ..... 50/60 Hz, 500 VAC, for 1 minute (between lead wire conductors and frame)
- Insulation resistance ..... 10 MΩ or more with a 500 VDC megger (between lead wire conductors and frame)
- Sound pressure level (SPL) ..... At 1 m away from the air inlet
- Storage temperature ..... -30 to +70˚C (Non-condensing)
- Lead wire ..... Inlet ⊕Red ⊖Black Sensor Yellow Control Brown
  Outlet ⊕Orange ⊖Gray Sensor Purple Control White
- Mass ..... 1600 g

Specifications

The models listed below **have pulse sensors with PWM control function.**

Model no.	Rated voltage [V]	Operating voltage range [V]	PWM duty cycle* [%]	Rated current [A]	Rated input [W]	Rated speed [min⁻¹] Inlet	Rated speed [min⁻¹] Outlet	Max. airflow [m³/min]	Max. airflow [CFM]	Max. static pressure [Pa]	Max. static pressure [inchH₂O]	SPL [dB (A)]	Operating temperature [˚C]	Expected life [h]
9CR5748P9G001	48	36 to 72	100	5.5	264	7300	6400	18	636	1400	5.62	83	-20 to +70	40000/60˚C (70000/40˚C)
			0	0.5	24	2400	1900	5.5	194.3	152	0.61	54		

* PWM input frequency is 25 kHz; models without specifications at 0% PWM duty cycle have zero fan speed at 0%.

Airflow - Static Pressure Characteristics / PWM Duty - Speed Characteristics Example

9CR5748P9G001 With pulse sensor with PWM control function

PWM duty cycle

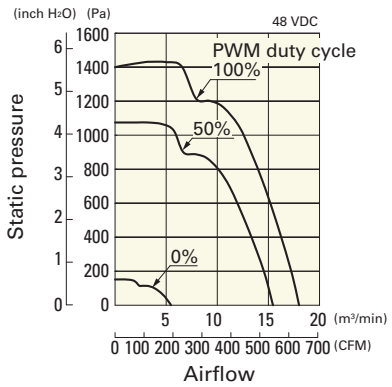

Operating voltage range

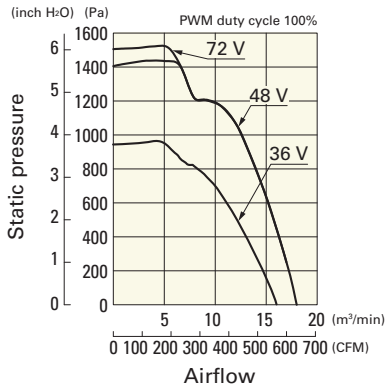

PWM duty - Speed characteristics example

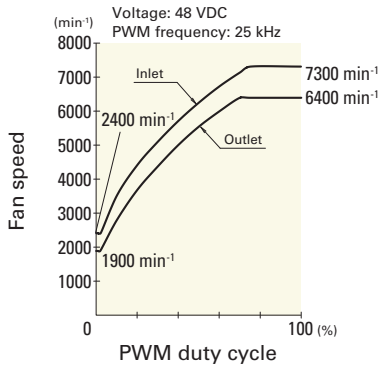

Dimensions (unit: mm)

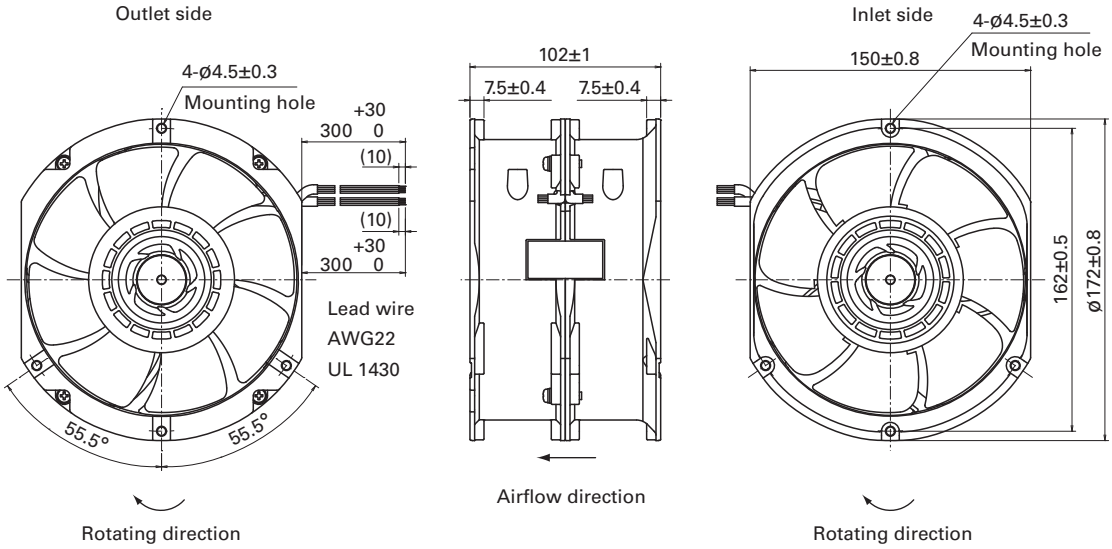

Reference Dimensions of Mounting Holes and Vent Opening (unit: mm)

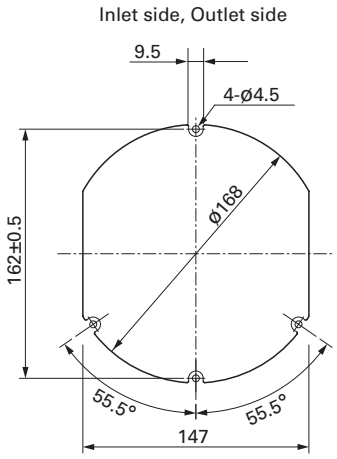

Options

Finger guards page: p. 586

Model no.: 109-319J, 109-319E, 109-319H, 109-320