Panasonic

No. SX-DSV03242

TECHNICAL REFERENCE

- EtherCAT Communication Specification -

MODEL

Product Name: AC Servo Driver
Product No.: MINAS-A6B series (EtherCAT communication/rotation type)

Issued on
Jun.6, 2017
Revised on
Mar.16, 2018

Motor Business Unit, Electromechanical Control Business Division
Automotive & Industrial Systems Company, Panasonic Corporation

7-1-1 Morofuku, Daito-City, Osaka 574-0044, Japan
Phone: +81-72-871-1212
Fax : +81-72-870-3151

R3.0

この英文仕様書は、原本である和文仕様書を元にパナソニック株式会社モータビジネスユニットが翻訳・発行するものです。翻訳は，原本の利用に際して一応の参考となるように便宜的に仮訳したものであり、公的な校閲を受けたものではありません。
英語訳のみを使用して生じた不都合な事態に関しては，当社は一切責任を負うものではありません。和文仕様書のみが有効です。

パナソニック株式会社　オートモーティブ＆インダストリアルシステムズ社
メカトロニクス事業部　モータビジネスユニット

This English specification is made and published by Motor Business Unit, Panasonic Corporation based on the original Japanese specification. Translation is provided unofficially only for the sake of convenience of utilizing the original Japanese specification as a measure of reference. It is not officially reviewed. Motor Business Unit, Panasonic Corporation is not liable for any disadvantages caused by utilizing only English specification.
Only the Japanese specification is effective.

Motor Business Unit, Electromechanical Control Business Division,
Automotive & Industrial Systems Company, Panasonic Corporation

REVISIONS

Date	Page	Rev.	Description	Signed
Jun.6, 2017	-	1.0	First edition	
Nov.17,2017	1	2.0	・Software version CPU1 Ver1.01 -> Ver1.02 CPU2 Ver1.01 -> Ver1.02	
	7,47,238,304		1) Function addition"Serial number range expansion"	
	(No change in this document)		2) Function addition "Safety function”	
	7-10,14,85, 86,95,158, 180,222-224, 226,229,234, 235,248-250, 275,293, 306-307		3) Function addition "Full-closed control”	
	(No change in this document)		4) Function addition"Hybrid vibration damping function"	
	(No change in this document)		5) Function addition "External scale position information monitor function under semi-closed control "	
	7,9,10,73,219		6) Function addition"Retracting operation function"	
	8,10,134, 222,223,228, 234,253		7) Function addition"Change of the attribute of Making Err 27.4 (Command error protection) to clearable"	
	92,94,157, 158,179,180, 230,242,243, 248-250,305, 306-307		8) Function addition" Servo information monitor object function expansion " ・Added deterioration diagnosis velocity output (V-DIAG) to 4F22h-00h bit 10 ・Changed the type of 4F23h-00h, 4F24h-00h, and 4F25h-00h from I32 to U32 ・Changed 4F41h-01h and 4F41h-02h to TxPDO compatible ・Added 4F4Ah-00h, 4F86h-00h, 4F8Ah-00h, and 4FA7h-00h	
	233		9) Function addition"Err 91.1 (Command error protection) for the out-of-range target position setting in the continuous rotating absolute encoder mode"	
	137		10) Function addition"Err 27.7 (Position information initialization error protection) at the time of return to origin cancellation"	
	296,299		・Change Changed the attribute of 3531h and 3638h from R to C	
	302		・Change Changed the attribute of 3724h bit 0 and bit11 from R to C	
	8,88,124, 156,178,309		・Change Changed the attribute of 6080h (Max motor speed) to supported for backup	
	92,94,157, 158,179,180, 249,307		・Change Changed the titles of 4F87h and 4F88h	
	16		・Correction Corrected the erroneous description of an abbreviation for an EtherCAT communication Cmd	
	17		・Correction Modified the description of the ESM state when PANATERM is in use	

Note: The page number (Page) is the current page number at the time of revision.

REVISIONS

Date	Page	Rev.	Description	Signed
Nov.17,2017	60-65	2.0	・Correction Corrected the erroneous description of the 1C32h and 1C33h object names	
	94,158,180, 249		・Correction Modified the description of 4F87h and 4F88h	
	209		・Correction Corrected the erroneous description of the PDS state after decelerated stop due to main power shutdown	
	241,242, 243,305,306		・Correction Corrected the erroneous description of the 4F21h, 4F22h, 4F26h, 4F36h, and 4F46h Data Types	
	92,97,157, 159,179,181, 250,307		・Correction Corrected the erroneous description of the units of 4FA8h and 4FA9h	
	132,156,250		・Correction Corrected the erroneous description of 4FB3h, 6099h, and 60FFh	
	301		・Correction Corrected the erroneous description of the 3687h and 3688h Data Types	
	155,156		・Correction Added 3312h, 3313h, and 3314h to Related objects common in velocity control (command & setup)	
	137,169,175		・Correction Corrected the erroneous description	
	254		・Correction Corrected the erroneous description of the title of Err91.1	
	195		・addition Added the description of Touch Probe Function (position latch request/release)	
	209		・addition Added a note *3) to Example of the deceleration and stop due to main power shut-down	
	302		・addition Added 37A1h to 37A4h (For manufacturer’s use)	
	302		・addition Added 37B0h-00h (For manufacturer's use)	
Jan.23,2018	92,97,157,159, 179,181,238,304	2.1	・addition Added notes of 4D29h	
	221		・Correction Corrected the erroneous description	
Mar.16,2018	1	3.0	・Software version CPU1 Ver1.02 -> Ver1.03 CPU2 Ver1.02 -> Ver1.03	
	94,99,159,161, 181,183,240,306		1) Function addition" Servo information monitor object function expansion " ・Supported for 4D29h (Over load factor)	
	2,3		・addition Added contents of function change for each software version	

Note: The page number (Page) is the current page number at the time of revision.

Contents

1 Introduction

This document is intended to describe the specification of the network interface EtherCAT to connect between the servo driver MINAS-A6B series (slave) and host controller (master).

<Software version>

This document is to apply to the servo driver of the software versions below:

CPU1(Version1): Ver.1.03
CPU2(Version2): Ver.1.03
Manufacture Software(Version3): Ver.1.00

* If there is no distinction among the software versions 1, 2, and 3 in this document, “software” indicates all of the three versions.
* Check the software versions 1 and 2 by 3744h (Reference to Chapter 5-2) or setup support software PANATERM.
* Check the software version 3 by 100Ah (Reference to Chapter 5-2).
* In this software version, the following functions are not supported. The descriptions about these functions in the document may be changed without a preliminary announcement when they are supported.

Item	Not supported item
Device profile	FoE (File over EtherCAT)
Modes of Operation	Modes of operation ip: Interpolate position mode
Motion	Jerk
SDO message	Complete Access

<Target user>

This document is intended for those who design host controller for the servo driver MINAS-A6B series.

<Related document>

SX-DSV03190: Reference specifications
(The specification about hardware, Safety Precautions,Warranty etc. is indicated.
Please be sure to read carefully, after understanding the contents, refer to this specification.)
SX-DSV03241: Technical document (Basic function specifications)

<Precautions>

(1) No part or whole of the contents in this document may be reused or reproduced without our written permission.
(2) The contents (specification, software version, etc.) of this document is subject to change without prior notice due to the improvement of the product.
(3) For the MINAS-A6B series, the shipment setting value was changed from the previous series (MINAS-A5B series, etc.) by enabling “2 degrees of freedom control mode”, etc.
Note that the parameters need to be adjusted again if replacing with MINAS-A6B series from the previous series.
See the reference specifications “SX-DSV03190” for the shipment setting value of the MINAS-A6B series.
(4) MINAS-A6B series may not be fully compatible operation with the previous series(MINAS-A5B series).
In the case of replacing the previous series to MINAS-A6B series, be sure to evaluate.

<Software version>

This technical reference applies to the servo drivers compatible with software of the following version:

* Check the software versions 1 and 2 by 3744h (Reference to section 5-2) or setup support software PANATERM.
* Check the software version 3 by 100Ah(Reference to section 5-2).

<table>
<tr><th>Software version</th><th>Contents of function change</th><th>Available PANATERM</th></tr>
<tr><td>CPU1(Version1)
Ver1.01
CPU2(Version2)
Ver1.01
Manufacture Software (Version3)
Ver1.00</td><td>First edition</td><td>6.0.1.4
or later</td></tr>
<tr><td>CPU1(Version1)
Ver1.02
CPU2(Version2)
Ver1.02
Manufacture Software (Version3)
Ver1.00</td><td>Function extended edition 1
<table>
<tr><th>Additional capability</th><th>Reference</th></tr>
<tr><td>1) Serial number range expansion</td><td>This document
5-2,6-9-7,9</td></tr>
<tr><td>2) Safety function</td><td>Functional Specification
1-1,3-2,7-1,7-2,8</td></tr>
<tr><td>3) Full-closed control</td><td>Functional Specification
3-2,3-4,4-2-2,4-2-5,4-5,4-7-2,5-2-4,
5-2-7,5-2-13,5-2-18,7-1,7-2,7-3,9-1
This document
2-4,6-9-4,6-9-7, 8-2,9</td></tr>
<tr><td>4) Hybrid vibration damping function</td><td>Functional Specification
5-2-13
This document
9</td></tr>
<tr><td>5) External scale position information monitor function under semi-closed control</td><td>Functional Specification
3-2,4-2,4-8,7-2
This document
6-9-7</td></tr>
<tr><td>6) Retracting operation function</td><td>Functional Specification
2-1,2-4-1,4-2,4-3,4-4,6-9,7-1,7-2,9-1
This document
6-2-1,6-9-2, 6-9-3,6-9-7,9</td></tr>
<tr><td>7) Support for Err27.4 (Command error protection) clear</td><td>Functional Specification
7-1,7-2
This document
6-6-5,8-1</td></tr>
<tr><td>8) Servo information monitor object function expansion</td><td>This document
6-9-4,6-9-7,9</td></tr>
<tr><td>9) Err 91.1 (Command error protection) for the out-of-range target position setting in the continuous rotating absolute encoder mode</td><td>Functional Specification
6-7,7-2
This document
6-9-4</td></tr>
<tr><td>10) Err27.7 (Position information initialization error protection) at the time of return to origin cancelation</td><td>Functional Specification
7-1,7-2
This document
8-1</td></tr>
</table></td><td>6.0.1.8
or later</td></tr>
</table>

<table>
<tr><th>Software version</th><th>Contents of function change</th><th>Available PANATERM</th></tr>
<tr><td>CPU1(Version1)
Ver1.03
CPU2(Version2)
Ver1.03
Manufacture Software
(Version3)
Ver1.00</td><td>Function extended edition 2
<table><tr><th>Additional capability</th><th>Reference</th></tr><tr><td>1) Servo information monitor object function expansion
• 4D29h(Over load factor)</td><td>This document
6-6-1,6-7-1,6-8-1,6-9-7,9</td></tr></table></td><td>6.0.1.8
or later</td></tr>
</table>

1-1 Start-up guide

A schematic procedure until it can operate with a motor simple substance by pp control is described.

Note: This section is only for reference and does not guarantee the operation. Some descriptions including those for the homing operation are omitted. For details, refer to this document and the specifications issued by ETG.

1) Preparation and connection (Mainly refer to Chapter 2 and Chapter 3)
- Connect a master with a slave , and a motor with a slave.
- In EtherCAT communication, the ESI file (xml file) which indicated EtherCAT slave information is needed. Please save the ESI file offered from our company at the preservation place of the ESI file specified by the master.
- A master generates ENI based on ESI offered from our company (using a configuration tool), and builds an EtherCAT network using ENI.(Refer to the operation manual of a master for details.)
- Station alias is set up.
  As for the value of Configured Station Alias(0004h) of SII, 0 is set up at the time of shipment.
  When it set up Station Alias by front RSW, once switch on a control power supply, write 3741h=0 in EEPROM, and set up Station Alias by RSW after turning off a control power supply.
  (The range of Station Alias which can be set up only by RSW is 0-255. When it set up 256 or more, refer to section 3-8-2.)
  Alternatively, setting through AL Status Code (Explicit Device ID) is available. For details, refer to section 3-8-2.
  The master reads the set values of the Configured Station Alias (0012h) of the ESC register and sets them to the Configured Station Address (0010h).
  Thereby addresses such as FPRD commands used in the mailbox are set.
- Switch on a power supply.
  Switch on both the main power and the control power.
  Check 7 segment LED in the front after power activation, and check that the error has not occurred.

2) Communication establishment (Mainly refer to Chapter 3 and Chapter 5)
- According to an ENI file, a master performs communicative initialization and construction.
  It is necessary to set up as follows in DC mode as an example of a setup.
  (When setting is DC mode, the cycles of 2ms and time until it latches data is 0us.)
  1C32h-01h=2(DC), 1C32h-02h=2000000(ns)
  1C33h-01h=2(DC), 1C33h-03h=0(ns)
- The clearance of ESC each register, The check of VendorID/ ProductCode etc., A setup of Station Alias, An ESC register is set up (SyncManager/FMMU for MailBOX) and an ESM state is made to change from Init to PreOP.
- After checking that the ESM state has changed to PreOP, a setup (DC, SyncManager/FMMU for PDO) of an ESC register is carried out, and an ESM state is made to change from PreOP to SafeOP.
- After checking that the ESM state has changed to SafeOP, an ESM state is made to change from SafeOP to OP.

The change state of the EtherCAT application layer

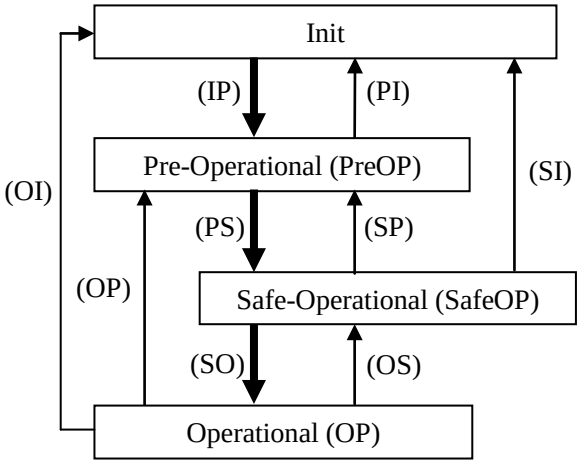

3) Object settings (Mainly refer to Chapter 6)

The example of a setting for carrying out absolute position arrangement operation as shown in the following figure by pp control is described.

- In order to operate a motor by pp, operation mode (6060h:Modes of operation) is changed.
  Set up 6060h=1(pp).
- A target position (607Ah:Target Position) is changed.
  Set up 607Ah=50000000(command).
  If the setting of 607Dh (Software position limit) is enabled, the operation range is limited.
  For details, refer to section 2) in 6-6-1.
- A target speed (6081h:Profile velocity) is changed.
  Set up 6081h=2000000(command/s).
  Speed is limited by the set value of 607Fh(Max profile velocity) and 6080h (Max motor speed).
  For details, refer to section 2) in 6-6-1.
- A acceleration (6083h: Profile acceleration) is changed.
  Set up 6083h=5000000(command/s^2).
  Speed is limited by the set value of 60C5h (Max acceleration).
  For details, refer to section 2) in 6-6-1.
- A deceleration (6084h: Profile deceleration) is changed.
  Set up 6084h=2500000(command/s^2).
  Speed is limited by the set value of 60C6h (Max deceleration).
  For details, refer to section 2) in 6-6-1.

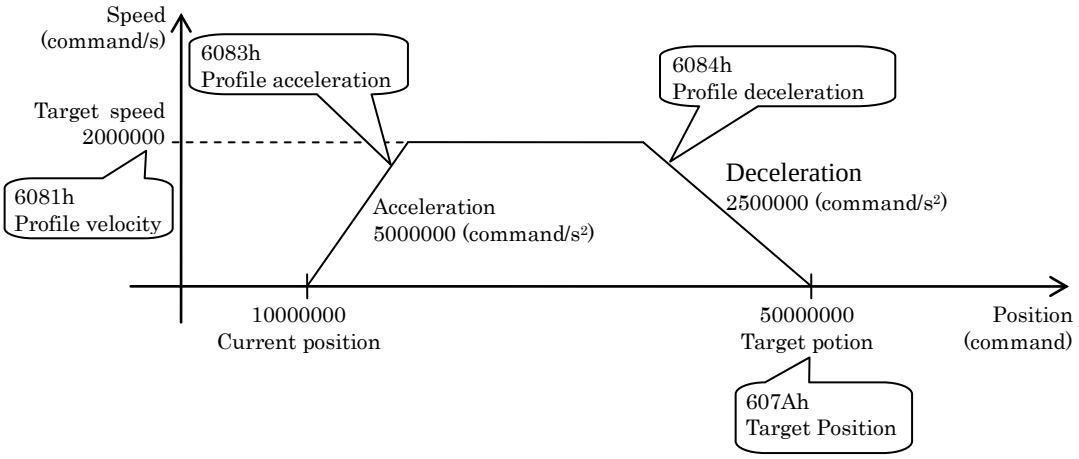

4) Motor operation (Mainly refer to Chapter 6)

- There is a PDS (Power Drive Systems) state in EtherCAT communication, the state of the motor is expressed. This PDS can be changed by the object 6040h(Controlword), and reference of a state can be performed at 6041h(Statusword). Be sure to transmit the changes instructions to the following state, after checking that the state had changed at 6041h(Statusword).
- A PDS state is changed from "Switch on disabled" to "Ready to switch on".
  Please set up 6040h=0006h(2:Shutdown), check that 6041h changes from xx40h to xx21h.
- A PDS state is changed from "Ready to switch on" to "Switched on".
  Please set up 6040h=0007h(3:Switch on), check that 6041h changes from xx21h to xx23h.
- A PDS state is changed from "Switched on" to "Operation enabled".
  Please set up 6040h=000Fh(4:Enable operation), check that 6041h changes from xx23h to xx27h.
  It will be in servo ON state by becoming 6041h=xx27h.
- In order to start pp operation, bit4(new set point) of 6040h is changed from 0 to 1.
  bit5(change set immediately), bit6(absolute/relative) and bit9(change on set-point) remains at 0.
  Please set up 6040h=001Fh.
  Motor starts to operate.
- A PDS state is changed from "Operation enabled" to "Switched on", servo-off is carried out.
  Please set up 6040h=0007h(5: Disable operation), check that 6041h changes from xx27h to xx23h.

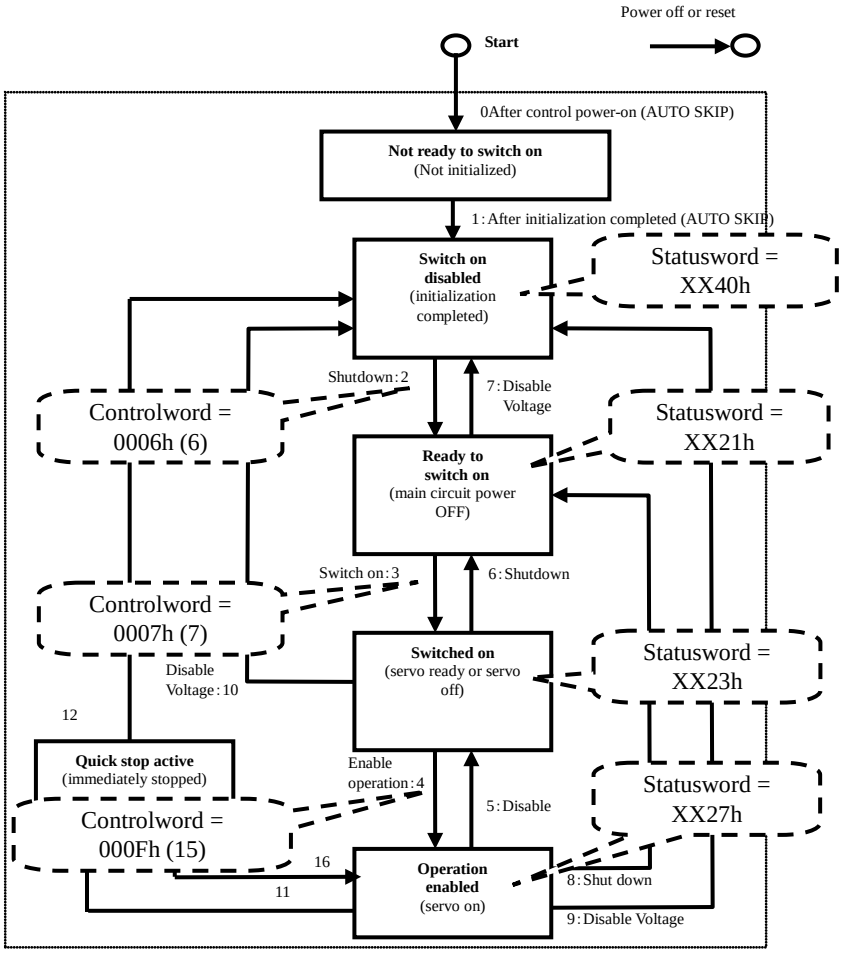

5) When the motor does not operate

- When servo-on is not performed, before the PDS state inside driver changes, there is a possibility of having transmitted the changes commands to the following state. Transmit the changes commands to the following state after checking that the PDS change state has been completed.
- Although servo-on is carried out, when the motor does not operate, there may be inaccurate setting object. Check the settings of the object.
  In particular, make sure that the motor operation is not limited by objects that set a maximum value, such as 6080h (Max motor speed), or objects that set an operation range, such as 607Dh (Software position limit).
  If bit 11 (internal limit active) of 6041h (Statusword) is 1, internal limitation is imposed. Refer to “6-4. Statusword (6041h)” to eliminate the cause of the internal limitation.
- When alarm is occurred, remove the factor of alarm after referring to Chapter 8 “EtherCAT Relevant Protection Functions” of this document or Chapter 7 “Protective function/Alarm function” in technical reference functional specification (SX-DSV03241).
  After factor of alarm is removed, perform alarm clear after referring to Chapter 8-4 “Clear error (alarm)/Clear warning” of this document.

6) About PANATERM

We will prepare a setup support software "PANATERM" in MINAS-A6B series.
The following thing is function in PANATERM.

- Reading and writing of servo parameters.
- Reading and writing of objects. *1)
- The status monitor of internal driver and input/output terminals.
- Display alarm detailed information, alarm history display, alarm clearance.
- Graphical display of a motor operation waveform
- A test run, frequency characteristic measurement *2)

etc.

Please refer to the operation manual of PANATERM for details.

*1) - If writing (editing) an object using the object editor, it is necessary to set the ESM status to Init.
- If some objects is written (edited) by object editor, MINAS-A5B series needed to write into EEPROM and restart the driver. As for MINAS-A6B series, the edit is immediately reflected on the actual object. (See specifications of each object for reflection timing of the actual operation). Note that operation is different from MINAS-A5B series.

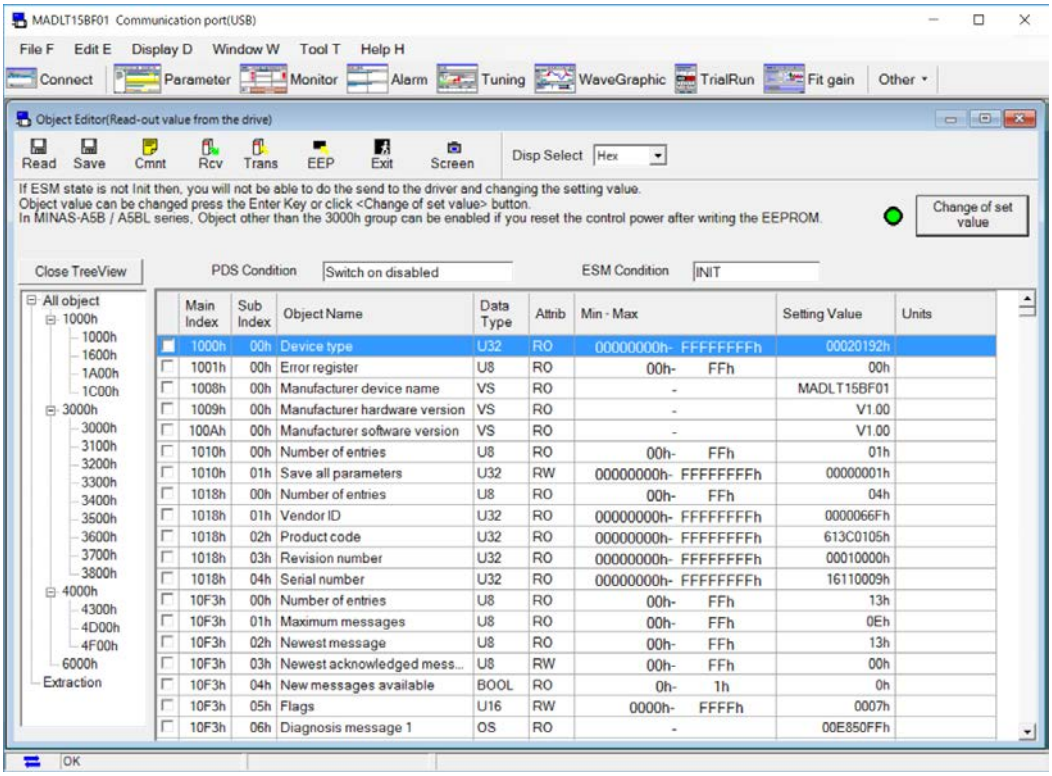

*2) As for the MINAS-A5B series, it was necessary to set the ESM state to Init when using operations of PANATERM (test run function, frequency characteristic measurement function, fit gain function, Z phase search function and pin assignment setting). As for the MINAS-A6B series, PANATERM operation is available even if the ESM state is set to other than Init (while establishing communication) by setting 3799h bit0=1.

Index	Sub-Index	Name / Description	Units	Range	Data Type	Access	PDO	Op-mode	EEPROM
3799h	00h	Communication function extended setup 6	—	-32768 – 32767	I16	rw	No	ALL	Yes
		bit0: Operation command through USB connection (PANATERM) when EtherCAT communication is established. (test run function, FFT, fit gain function, Z phase search function and pin assignment setting) Execution enabled. 0: Disabled 1: Enabled							

However, be careful for the following position when operating PANATERM while establishing communications.

Note) ・In case of servo-on with test run, etc. from PANATERM, the PDS state does not change to "Operation enabled". (quick stop etc. do not work.)
・Warning D2 "PANATERM command execution warning" occurs to inform the servo-on state by the operation command of PANATERM to the host controller.
・Err27.6 (operation command conflict protection) occurs when the host controller sends the servo-on command during motor operation with test run, etc. from PANATERM.
And, if the ESM state is changed while the motor is operating, Err88.2 (ESM requirements during operation error protection) occurs.
・If motor is operated from the PANATERM while using in the increment mode, returning to the origin state will be incomplete.
(6041h (Statusword) bit12 of 6060h (Controlword)=6(when setting hm) becomes 0.)
・6072h (Max torque) is disabled when the ESM state is Init.
It is enabled when ESM state is PreOP or more.

1-2 Main differences from the MINAS-A5B series

There are mainly the following differences in specifications when comparing the MINAS-A6B series with the MINAS-A5B series.
Please inquire about specification differences other than the below.

<SX-DSV03242 : Technical document (EtherCAT Communication Specifications)>

chapter	function	Description	A5B specification	A6BE(Standard type) specification	A6BF(Multi-function type) specification
			Ver3.04	CPU1：Ver1.02,CPU2：Ver1.02	CPU1：Ver1.02,CPU2：Ver1.02
1-1	About PANATERM	PANATERM object editor	The Object and the actual behavior are reflected by turning on the control power ON again after writing to the EEPROM.	Immediately reflected to the object. For the actual behavior, please check the specification of each object.	
		Operation command through USB connection (PANATERM) when EtherCAT communication is established.	Not supported	Supported Switching with 3799h:bit0 0: Disabled, 1: Enabled	
3-8-2	Node addressing (Station alias setting)	Station Alias value if both RSW and 3740h are set to 0.	Set the value of the SII area (0004h).	0 is set.	
3-5-1	DC(SYNC0 Event synchronization)	DC(Distributed Clock)	32bit	64bit	
5-2	Device Information	1018h-02h(Product code)	The value that the product number is converted.	The value given by us. See the reference specifications “SX-DSV03190”	
		Product serial number indication	Indicated as 1018h-04h (Serial number)	Indicated as 1018h-04h (Serial number) and 4D15h (Drive serial number)	
5-5	Sync manager 2/3 synchronization (1C32h、1C33h)	Sync Manager cycles 1C32h-03h (Cycle time) 1C33h-03h (Cycle time)	250μs、500μs、1ms、2ms、4ms	125μs、250μs、500μs、 1ms、2ms、4ms *125μs is not supported for pp, pv, tq control mode.	125μs、250μs、500μs、 1ms、2ms、4ms *125μs is not supported for pp, pv, tq control mode. * When the external scale position information monitor function is enabled under semi-closed control, 125 μs and 250 μs are not supported * Under full-closed control, 125 μs and 250 μs are not supported.
		1C33h-03h(Shift time) Setting value	In steps of 250000[ns]	In steps of 125000[ns]	
		1C32h-05h (Minimum cycle time) 1C33h-05h (Minimum cycle time)	・Setting value 17000 ・meaning Minimum value from the SM2 event or Sync0 event until completion of writing or reading out to the ESC.	・Setting value 125000 ・meaning Minimum value of the configurable communication cycle	
		1C32h-06h (Calc and copy time)	・Setting value 500000 ・meaning Time from the SM2 or SYNC0 event to completion of generation of PWM signal	・Setting value 25000 ・meaning Time from the SYNC0 event to completion of read-out of ESC	
		1C33h-06h (Calc and copy time)	・Setting value 400000 ・meaning Time from the data latching in the encoder to the writing of communication data in the ESC register.	・Setting value 45000 ・meaning Time from the SM2 or SYNC0 event to completion of writing into the ESC register.	
6-9-3	Digital inputs / Digital outputs	Digital inputs (60FDh) bit25:RET status[RET-STAT] bit18:[RET]	Not supported	Supported	

(To be continued)

<SX-DSV03242 : Technical document (EtherCAT Communication Specifications)>

chapter	function	Description	A5B specification	A6BE(Standard type) specification	A6BF(Multi-function type) specification
			Ver3.04	CPU1：Ver1.02,CPU2：Ver1.02	CPU1：Ver1.02,CPU2：Ver1.02
6-9-4	Position Information	Objects related to position information to be initialized.	・6062h(Position demand value) ・6063h(Position actual internal value) ・6064h(Position actual value) ・60FCh(Position demand internal value)	・4F04h(Position command internal value(after filtering)) ・4F41h-02h(Multi-turn data) ・6062h(Position demand value) ・6063h(Position actual internal value) ・6064h(Position actual value) ・60FCh(Position demand internal value)	・4F04h(Position command internal value(after filtering)) ・4F0Dh(External scale position) (Full-closed control only) ・4F48h(External scale pulse total) (Full-closed control only) ・4F86h(Hybrid deviation) (Full-closed control only) ・4FA7h(External scale position(Applied polarity)) (Full-closed control only) ・4F41h-02h(Multi-turn data) ・6062h(Position demand value) ・6063h(Position actual internal value) ・6064h(Position actual value) ・60FCh(Position demand Internal value)
		Initialization timing of objects related to position information	・When establishing communication (ESM state Init to PreOP) ・When returning to origin is completed	・At the time of the control power supply ON ・When establishing communication (ESM state Init to PreOP) ・When returning to origin is completed ・When multi-turn clearing of the absolute Encoder ・Completion of the following PANATERM Operations Test run, frequency characteristic measurement, Z phase search and fit gain ・When executing the setting of the PANATERM pin assignment ・When Err27.4 (Position command error protection) occurs	
		Timing of reflection on behavior of electronic gear and 607Ch(Home offset).			
		Timing of reflection on behavior of 607Eh(Polarity) .	・When establishing communication (ESM state Init to PreOP)	・At the time of the control power supply ON ・When establishing communication (ESM state Init to PreOP) ・Completion of the following PANATERM Operations Test run, frequency characteristic measurement, Z phase search and fit gain ・When executing the setting of the PANATERM pin assignment ・When Err27.4 (Position command error protection) occurs	
		Effective range of electronic gear ratio	1000 times to 1/1000 times	8000 times to 1/1000 times (Communication cycle 125μs is supported only 1:1 of the electronic gear ratio.)	
		Reflecting Electronic gear and 607E(Polarity) to PANATERM(Monitor data, Waveform graphic, Test run, Frequency characteristics measurement, Z phase search, fit gain).	No ・Unit of position information is encoder unit. ・607Eh (Polarity) is not reflected in POT/NOT. (CCW direction is POT)	Yes ・Unit of position information is command unit. ・607Eh (Polarity) is reflected in POT/NOT. (The positive direction of the command is POT)	
6-9-7	Servo information monitor object	Servo information monitor object (4000h's objects)	Not supported	Supported	
8-1	Error (alarm) List (attribute and LED display)	Err27.4(Position command error protection) clear attribute	Not clearable	Clearable	

<SX-DSV03241 : Technical document (Basic function specifications)>

chapter	function	Description	A5B specification	A6BE(Standard type) specification	A6BF(Multi-function type) specification
			Ver3.04	CPU1：Ver1.02,CPU2：Ver1.02	CPU1：Ver1.02,CPU2：Ver1.02
2-1 2-4-1	Input signal	Retracting operation input (RET)	Not supported	Supported	
3-2	7-segment LED	Station Alias display 3700h(Display on LED)=4 (Station alias setting value) display setting	The setting value of RSW of the front panel is displayed regardless of 3741h (Station Alias selection).	The value to be displayed varies depending on the setting value of 3741h (Station Alias selection). 3741h = 0: Value of RSW of the front panel 3741h = 1: Value of Low byte of SII area(0004h)	
3-4	Monitor signal output function	Analog monitor Unit of command position deviation	Encoder unit (No reflection of 607Eh (Polarity))	Command unit (607Eh (Polarity) is reflected.)	
4-2-4	Positioning complete output (INP/INP2) function	Position setup unit select 3520h(Position setup unit select)	Not supported 3520h = 1 fixed (encoder unit)	Supported 3520h = 0 : command unit 3520h = 1 : encoder unit(external scale)	
4-2-5	Pulse regeneration function	Function for transmitting the movement amount to the host controller with AB pulse	Not supported	Supported	
4-5	Full-closed control	Support for the full-closed system with external scale	Not supported	Not supported	Supported
4-8	External scale position information monitor function under semi-closed control	Function that monitors external scale position information via EtherCAT communication even under semi-closed control	Not supported	Not supported	Supported
5-2-10	Load variation suppression function	Function for suppressing fluctuation of motor speed caused by disturbance torque and load fluctuation and improving stability	Not supported	Supported	
5-2-13	Hybrid vibration damping function	Function that suppresses the vibration resulting from the amount of torsion of the motor and the load in the full-closed control mode	Not supported	Not supported	Supported
5-2-15	Quadrant projection suppression function	Control configuration that suppresses quadrant projection occurring during arc interpolation of 2 or more axes	Not supported	Supported	
5-2-16 5-2-17 5-2-18	Two-degree-of-freedom control mode	2 degrees of freedom control shipment setting condition Shipment value of 3647h (Function expansion setup 2)	2 degrees of freedom control Disabled (Shipment value 0)	2 degrees of freedom control Enabled (Shipment value 1)	
		Control mode in 2 degrees of freedom control	Position control mode	・2 degrees of freedom control (standard type) Position control mode, Velocity control mode ・2 degrees of freedom control (synchronization type) Position control mode	・2 degrees of freedom control (standard type) Position control mode, Velocity control mode Full-closed control mode ・2 degrees of freedom control (synchronization type) Position control mode
6-3-6-2	Fall prevention function in the event of Servo-ON	Internal value state selection of 60B2h (Torque offset) switching bit in servo-off (fall prevention function in the event of Servo-ON)	Switching with 3724h bit10	Switching with 3724h bit7	
6-5	Position comparison output function	Function that enables a general-purpose output or encoder output terminal to output a pulse signal when the actual position passes the position set for the parameter	Not supported	Supported	
6-7	Continuous rotating absolute encoder function	Function that enables setting of the upper limit value for the absolute encoder multi-turn data arbitrarily	Not supported	Supported	
6-8	Deterioration diagnosis warning function	Function that checks the changes in motor and connected equipment characteristics to output deterioration diagnosis warning.	Not supported	Supported	
6-9	Retracting operation function	Function that performs an retracting operation at the speed and movement amount set up by the relevant parameters when one of the retracting operation activation conditions is established	Not supported	Supported	

(To be continued)

<SX-DSV03241 : Technical document (Basic function specifications)>

chapter	function	Description	A5B specification	A6BE(Standard type) specification	A6BF(Multi-function type) specification
			Ver3.04	CPU1：Ver1.02,CPU2：Ver1.02	CPU1：Ver1.02,CPU2：Ver1.02
7-1 7-2	List of protective function Details of Protective function	Err16.1 (Torque saturation error protection) Occurrence factor	Torque saturated is continued for the value set for Pr7.16 “Torque saturation error protection times”.	Torque saturated is continued for the time set for Pr7.16 “Torque saturation error protection times” or Pr6.57 “Torque saturation error protection time”.	
		Err27.4(Position command error protection) clear attribute	Not clearable	Clearable	
		Err27.7 (Position information initialization error protection)	Not supported	Supported	
		Err87.1 (Retracting operation completion (I/O))	Not supported	Supported	
		Err87.2 (Retracting operation completion (communication))	Not supported	Supported	
		Err87.3(Retracting operation error)	Not supported	Supported	
		Err88.1 (Control mode setting error protection) Occurrence factor	The mode other than position control is set for 6060h (Modes of operation) while in 2 degrees freedom control mode.	・4 (tq) and 10 (cst) are set for 6060h(Modes of operation) during 2 degrees freedom control mode (standard type). ・3(pv), 4(tq), 9(csv) and 10(cst) are set for 6060h(Modes of operation) during 2 degrees freedom control mode (synchronization type).	・4 (tq) and 10 (cst) are set for 6060h(Modes of operation) during 2 degrees freedom control mode (standard type). ・3(pv), 4(tq), 9(csv) and 10(cst) are set for 6060h(Modes of operation) during 2 degrees freedom control mode (synchronization type). ・Under full-closed control, the control mode was set to 2 degrees of freedom control mode (synchronization type) (Enhanced software version 1 and later (Ver1.02 and later))
		Err88.2 (ESM requirements during operation error protection) Occurrence factor	When the ESM state received a transition command to other ESM states with the PDS state at “Operation enabled” or “Quick stop active”.	・When the ESM state received a transition command to other ESM states with the PDS state at “Operation enabled” or “Quick stop active”. ・When 3799 bit0=1 is set, the command for transiting from the current ESM to other ESM state is received during servo-on (while warning D2 is occurring) on PANATERM.	
		Err91.1 (Command error protection) Occurrence factor	Control mode was switched at intervals shorter than 2ms.	・In the continuous rotating absolute encoder mode, a position outside the movable range (exceeding the Position range limit (607Bh)) was set as the target position.	・In the communication cycles of 0.250 ms and 0.125 ms, the external scale position information monitor function was enabled under semi-closed control. ・Under full-closed control and in the DC synchronization mode or SM2 synchronization mode, the communication cycles were set to 0.250 ms and 0.125 ms. ・In the continuous rotating absolute encoder mode, a position outside the movable range (exceeding the Position range limit (607Bh)) was set as the target position.
7-3	Warning function	Warning latch state setup function 3627h(Warning latch state setup)	Not supported 3627h is fixed at 3. (Both extended warning and general warning are latched.)	Supported	
		Over-load warning detection level and Over-load warning release level	A5B:Not supported A5BL:supported Over-load warning detection level(3673h) Over-load warning release level (3674h)	Supported Over-load warning detection level(3695h) Over-load warning release level (3696h)	
7-4	Excess positional deviation protection setting	・Position deviation excess setup 3014h(Position deviation excess setup) ・Positioning complete range unit 3431h(Positioning complete (In-position) range) 3442h(Positioning complete (In-position) range 2)	Encoder unit	It is possible to change to command unit or encoder unit(external scale unit) by 3520h(Position setup unit select). 3520h = 0 : command unit 3520h = 1 : encoder unit (external scale)	
8-1	safe torque off (STO) function	The state when STO function is activated.	Alarm state Occurrence of Err30.0 (safety input protection)	Alarm does not occur. Front panel display is “St”.	

2 System Overview

2-1 EtherCAT Overview

EtherCAT is an abbreviation of Ethernet for Control Automation Technology. It is an open network communication between master and slaves using real time Ethernet developed by Beckhoff Automation GmbH and is administered by ETG (EtherCAT Technology Group).
This product has passed the EtherCAT Conformance Test.
See the Reference Specification “SX-DSV03190” for product number of the servo driver that passed EtherCAT Conformance Test.

EtherCAT® is registered trademark and patented technology,
licensed by Beckhoff Automation GmbH, Germany.

2-2 Reference Materials

This document is created with reference to the following article.

(Note) About the difference of the written contents of this document and the following reference data, the written contents of this document become effective.
It does not guarantee all the description of the reference materials that are not described in this document.

Number	Document	Type	State	Version	Date
ETG.1000.2	EtherCAT Specification - Part2 - Physical Layer service and protocol specification	S	R	V1.0.3	2013.01.03
ETG.1000.3	EtherCAT Specification - Part3 - Data Link Layer service definition	S	R	V1.0.3	2013.01.03
ETG.1000.4	EtherCAT Specification - Part4 - Data Link Layer protocols specification	S	R	V1.0.3	2013.01.03
ETG.1000.5	EtherCAT Specification - Part5 - Application Layer service definition	S	R	V1.0.3	2013.01.03
ETG.1000.6	EtherCAT Specification - Part6 - Application Layer protocol specification	S	R	V1.0.3	2013.01.03
ETG.1020	Protocol Enhancements	S	R	V1.2.0	2015.12.01
ETG.1300	Indicator and Labeling	S	R	V1.1.1	2015.07.03
ETG.2000	Slave Information	S	R	V1.0.8	2016.09.20
ETG.6010	Implementation Directive for CiA402 Drive Profile	D	R	V1.1.0	2014.11.19

Number	Document	Type	State	Version	Date
IEC61800-7-200 (201)	Adjustable speed electrical power drives systems - Profile type 1 specification	-	-	Ed.1.0	2007.8.10
IEC61800-7-300 (301)	Adjustable speed electrical power drives systems - Mapping of profile type 1 to network technologies	-	-	Ed.1.0	2007.8.10

Number	Document	Type	State	Version	Date
ET1810/ET1811 /ET1812	EtherCAT Slave Controller IP corefor Altera FPGAs Release 2.4.4	-	-	V1.0	2015.1.20

2-3 System Configuration (master & slave configuration)

The connection type of EtherCAT is a network system that connects master (FA controller) and multiple slaves with a line (*Note: For other than line connection, send an inquiry to us separately).

The number of connectable nodes of slaves depends on the master processing, communication cycle, number of bytes transferred, and so on.
Also check the specification of a master together.

A master generates EtherCAT Network Information (ENI) (using a configuration tool) based on EtherCAT Slave Information (ESI) offered from our company, and builds an EtherCAT network using ENI.

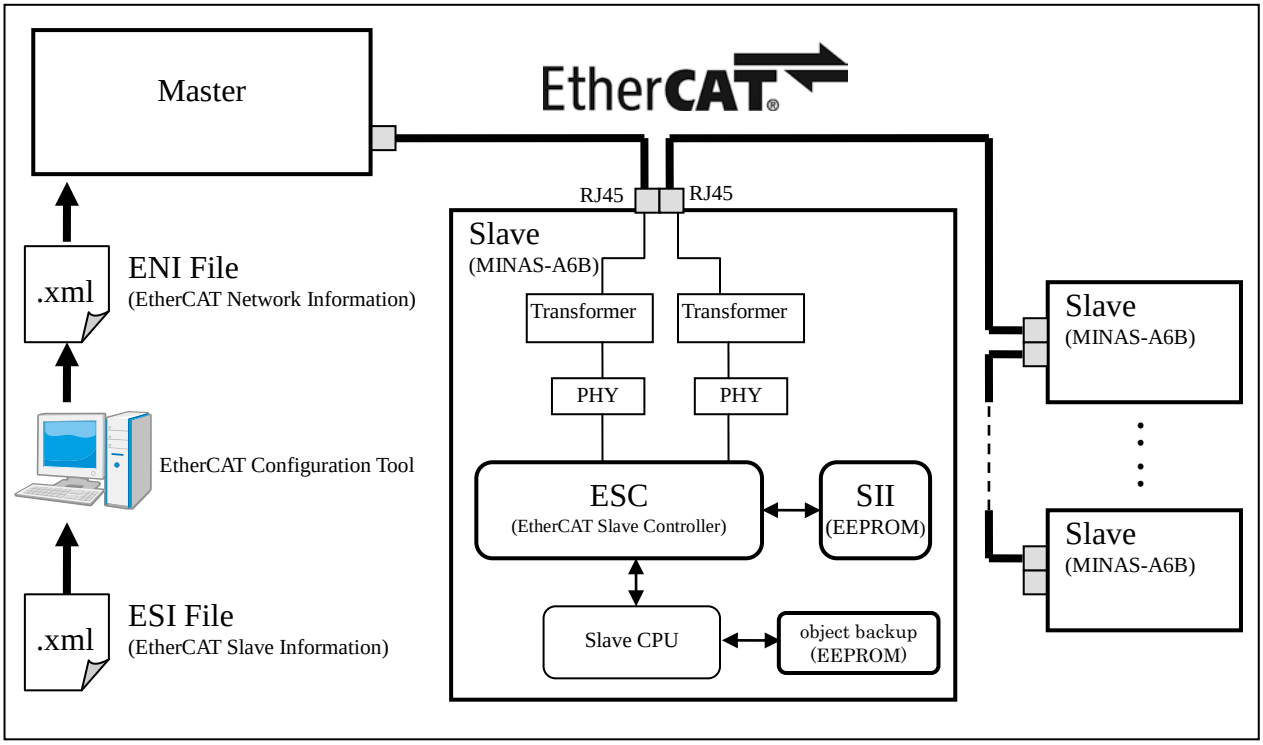

EtherCAT Slave Information (ESI) :
It is a file of the XML form offered from our company.
The definition of slave peculiar information (Vendor information, product information, a profile, an object, process data, the existence of a synchronization, a SyncManager setup, etc) is indicated.

EtherCAT Network Information (ENI) :
This is a file created by a master.
Information which identifies a slave (Vendor information etc.) and information for initializing each slave is contained in ENI and a master performs network initialization and construction based on information indicated to ENI.

Slave Information Interface (SII) :
EEPROM which saved SII data is connected to ESC. The information on Initialization information of ESC, Spec value of communication settings of the slave application (Data value size of the mailbox), Mapping of process data, etc. is set up into this EEPROM (SII).

Note:
- The length of the cable between nodes should be up to 100 m.

- Be aware that MINAS-A6B cannot connect to other than EtherCAT communication type for example as RTEX (Realtime Express) communication type(MINAS-A4N, MINAS-A5N and MINAS-A6N series).
It is possible to establish connection with MINAS-A5B series of EtherCAT communication type.

2-4 Specification List

<table>
<tr><th>Item</th><th>Specification</th></tr>
<tr><td>Physical layer</td><td>100BASE-TX (IEEE802.3)</td></tr>
<tr><td>Baud rate</td><td>100[Mbps] (Full duplex)</td></tr>
<tr><td>Topology</td><td>Line (*Note: For other than line connection, send an inquiry to us)</td></tr>
<tr><td>Connection cable</td><td>Twist pair CAT5e</td></tr>
<tr><td>Cable length</td><td>Between nodes: up to 100 m</td></tr>
<tr><td>Number of slaves (shafts) connected</td><td>Up to 65535</td></tr>
<tr><td>Communication port</td><td>2 ports (RJ45 connector)</td></tr>
<tr><td>EtherCAT Indicators
(LED)</td><td>[RUN] RUN Indicator (Green)
[ERR] ERROR Indicator (Red)
[L/A IN] Port0 Link/Activity Indicator (Green)
[L/A OUT] Port1 Link/Activity Indicator (Green)</td></tr>
<tr><td>Station Alias (ID)</td><td>Range: 0 to 65535
<Setting 1>: Lower 8 bits: 2-digit rotary switch (front panel)
Upper 8 bits: Object 3740h
or
<Setting 2>: SII saving value</td></tr>
<tr><td>Explicit Device ID</td><td>Supported</td></tr>
<tr><td>Device profile</td><td>CoE (CANopen over EtherCAT)</td></tr>
<tr><td>SyncManager</td><td>4</td></tr>
<tr><td>FMMU</td><td>3</td></tr>
<tr><td>Modes of Operation
(operation mode)
Abbreviation: Op-mode</td><td>
<table>
<tr><th>Servo loop</th><th colspan="2">Modes of operation</th></tr>
<tr><td rowspan="4">Position</td><td>pp</td><td>Profile position mode</td></tr>
<tr><td>csp</td><td>Cyclic synchronous position mode</td></tr>
<tr><td>ip
(Not supported)</td><td>Interpolate position mode</td></tr>
<tr><td>hm</td><td>Homing mode</td></tr>
<tr><td rowspan="2">Velocity</td><td>pv</td><td>Profile velocity mode</td></tr>
<tr><td>csv</td><td>Cyclic synchronous velocity mode</td></tr>
<tr><td rowspan="2">Torque</td><td>tq</td><td>Torque profile mode</td></tr>
<tr><td>cst</td><td>Cyclic synchronous torque mode</td></tr>
</table>
</td></tr>
<tr><td>Touch Probe</td><td>2ch Positive edge/Negative edge</td></tr>
<tr><td>Synchronous mode</td><td>DC (SYNC0 event synchronization) (DC 32bit)
SM2 (SM2 event synchronization)
Free RUN (asynchronous)</td></tr>
<tr><td>Cycle time
(DC, SM2 communication cycle)</td><td>125, 250, 500, 1000, 2000, 4000[μs]
*125μs is not supported for pp, pv, tq control mode.
*125 μs and 250 μs are not supported for the external scale position information monitor function under semi-closed control and the full-closed control</td></tr>
<tr><td>Communication object</td><td>SDO (Service Data Object)
PDO (Process Data Object)</td></tr>
<tr><td>SDO message</td><td>Supported: SDO Request, SDO Response, SDO information, Emergency Message
Not supported: Complete Access</td></tr>
<tr><td>Free PDO Mapping</td><td>Supported</td></tr>
<tr><td>Maximum number of PDO assigns</td><td>RxPDO:4 [Table]
TxPDO:4 [Table]</td></tr>
<tr><td>Maximum PDO data length</td><td>RxPDO:32 [byte]
TxPDO:32 [byte]</td></tr>
<tr><td>Diagnosis Object</td><td>Diagnosis message only</td></tr>
<tr><td>Command Object</td><td>Not supported</td></tr>
<tr><td>Shift time</td><td>It only supports Input(Response) in increments of 125us.</td></tr>
<tr><td>Communication error correction of csp</td><td>Supported</td></tr>
<tr><td>Object Editor</td><td>Supported
(The value of the object setting and monitoring are enabled by Setup support software PANATERM.)</td></tr>
<tr><td>PANTERM operation while EtherCAT communication is established</td><td>Supported</td></tr>
</table>

3 EtherCAT Communication Specification

3-1 EtherCAT Frame Configuration

EtherCAT is an Ethernet based, real-time controllable, communication protocol for industrial use.
EtherCAT is an extension of IEEE 802.3 Ethernet standard, allowing you to transfer data in the standard Ethernet frame without changing its basic structure.
Set Ether Type in the Ethernet header to 88A4h, and subsequent Ethernet data is handled as the EtherCAT frame. The EtherCAT frame is composed of a header and not less than one datagram. And, the EtherCAT datagram is further divided more pieces.
ESC handles only the EtherCAT frame with EtherCAT header type = 1.

Ethernet/EtherCAT frame configuration

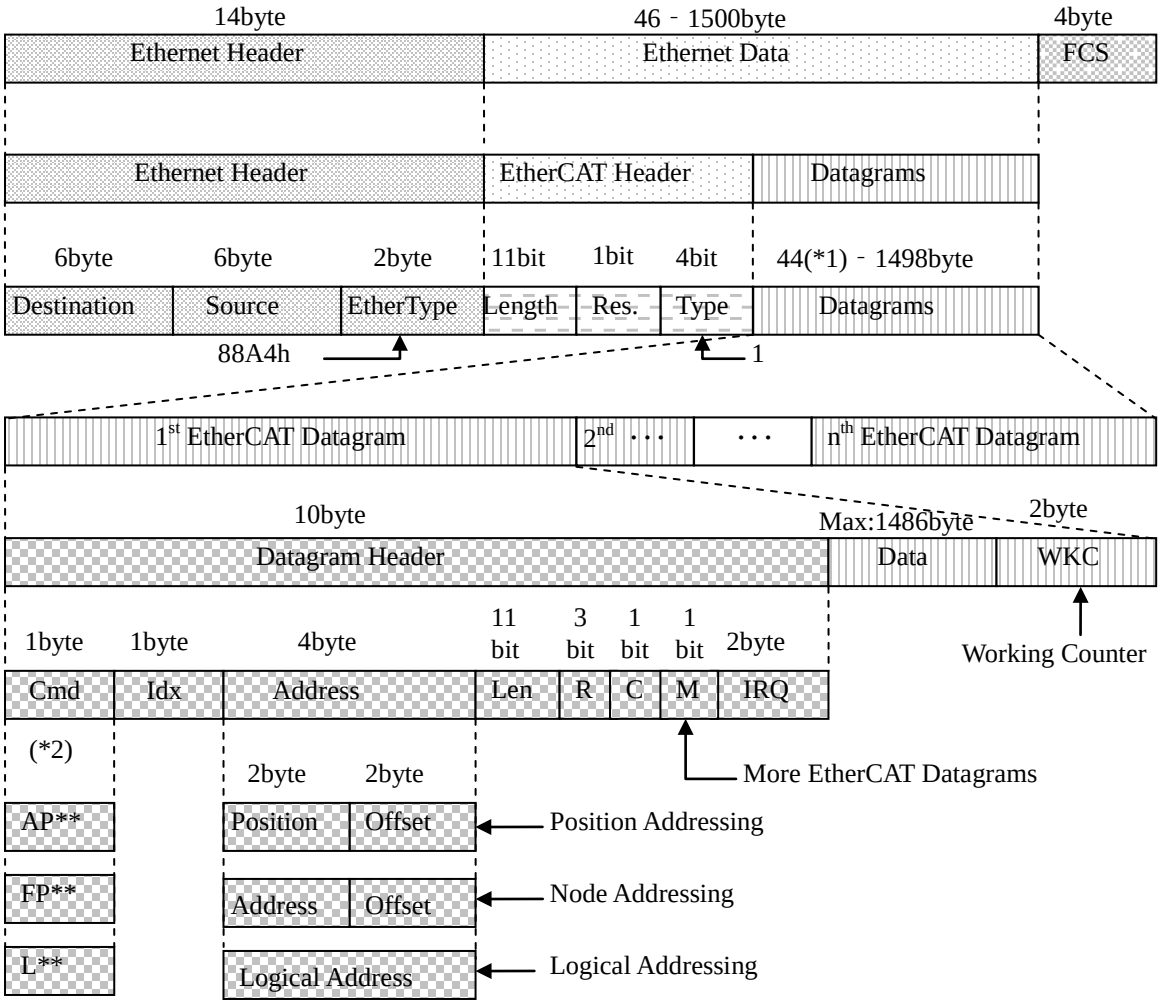

*1): If the Ethernet frame length is shorter than 64 bytes, add 1 to 32 bytes.
(Ethernet Header + Ethernet Data + FCS)

*2) Cmd

Addressing mode	Cmd	Abbreviation	Name	Explanation
-	00h	NOP	No oparation	No operation is executed.
Position Addressing	01h	APRD	Auto increment physical read	Each slave increments Address. When a frame whose Address value is 0 is received, the required read operation will be executed.
	02h	APWR	Auto increment physical write	Each slave increments Address. When a frame whose Address value is 0 is received, the required write operation will be executed.
	03h	APRW	Auto increment physical read write	Each slave increments Address. When a frame whose Address value is 0 is received, the required read & write operation will be executed.
Node Addressing	04h	FPRD	Configured address phsyical read	When the value of Address matches with Station Address, each slave executes the required read operation.
	05h	FPWR	Configured address phsyical write	When the value of Address matches with Station Address, each slave executes the required write operation.
	06h	FPRW	Configured address phsyical read write	When the value of Address matches with Station Address, each slave executes the required read & write operation.
—	07h	BRD	Broadcast read	All slaves execute the required read operation.
	08h	BWR	Broadcast write	All slaves execute the required write operation.
	09h	BRW	Broadcast read write	All slaves execute the required read & write operation.
Logical Addressing	0Ah	LRD	Logical read	When the value of Logical Address matches with the logical memory area designated by the request of FMMU, each slave executes the required read operation.
	0Bh	LWR	Logical write	When the value of Logical Address matches with the logical memory area designated by the request of FMMU, each slave executes the required write operation.
	0Ch	LRW	Logical read write	When the value of Logical Address matches with the logical memory area designated by the request of FMMU, each slave executes the required read & write operation.
Position Addressing	0Dh	ARMW	Positional physical read / multiple write	Each slave increments Address. A slave which received a frame whose Address value is 0 executes the required read operation. Other slaves execute the write operation.
Node Addressing	0Eh	FRMW	Configured address physical read / multiple write	Each slave compares the values of Address and Station Address. Matching slaves execute the required read operation. Other slaves execute the write operation.
—	0Fh ～ FFh	—	(Reserved)	—

3-2 ESM (EtherCAT State Machine)

The figure below shows a transition diagram for the state (ESM state) of EtherCAT application layer:

State transition diagram of EtherCAT application layer

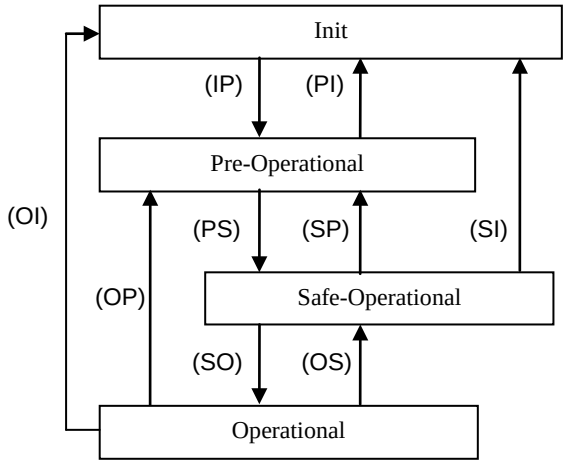

Note: The signs (IP etc.) are the abbreviations of the state transitions in the state transition diagram.
(IP):Init -> Pre-Operational
(PS):Pre-Operational -> Safe-Operational
etc.

ESM state	Possible operation in each state	Communication operation			FFT test run
		Send/ receive SDO (Mailbox)	Send PDO (S to M)	Receive PDO (M to S)	
Init	The communication part is initializing and the transmission and reception with both SDO (Mailbox) and PDO are impossible	-	-	-	Yes
Pre-Operational (abbr.: PreOP)	Possible to send and receive data through SDO (Mailbox)	Yes	-	-	Yes
Safe-Operational (abbr.: SafeOP)	The transmission (from slave to master) with PDO as well as the transmission and reception over SDO (Mailbox) are possible	Yes	Yes	-	Yes
Operational (abbr.: OP)	Possible to send and receive both SDO (Mailbox) and PDO	Yes	Yes	Yes	Yes

- It is always possible to access an ESC register from the master regardless of the table above.
- When the command update, SYNC0 event, and SM2 event are stopped before the ESM state transition is completed while ESM is changing from Op to other ESM state (Init, PreOP, or SafeOP), a communication error may occur.
- To transit the ESM state continuously, transit next state after confirming that the previous state transition was completed.
- If 3799h bit 0 = 0, for using the test run, FFT, and other functions of setup support software PANATERM, the ESM state must be Init.
  When 3799h bit0=1 is set, PANATERM operation (test run and FFT etc.) can be done even if ESM state is other than Init. Refer to Chapter 1-1 Startup guide 6) About PANATERM.

The table below lists the relationship between each PDS (Power Drive Systems) and ESM states.
For more information on PDS (Power Drive Systems), refer to the Chapter 6-2.

PDS state \ ESM state	Init	PreOP	SafeOP	Op
Not ready to switch on	Yes	No	No	No
Switch on disabled	Yes	Yes	Yes	Yes
Ready to switch on *1)	No	Yes	Yes	Yes
Switched on *1)	No	Yes	Yes	Yes
Operation enabled *2) *5)	No	Yes *4)	Yes *4)	Yes
Fault reaction active	Yes	Yes	Yes	Yes
Fault *3)	Yes	Yes	Yes	Yes

*1): When the ESM state received a transition command from PreOP, SafeOP and OP to Init, the PDS state changes Switch on disabled.
*2): When an ESM state received a transition command to other ESM states with the PDS state at “Operation enabled”, Err.88.2 (ESM requirements during operation error protection) occurs and the PDS state changes to "Fault".
*3): An ESM state is held when a PDS state changes to Fault by errors other than EtherCAT communication relation. However, an ESM state follows the specification indicated in Chapter 8-2 when EtherCAT communication relation error is occurred.
*4): Transition to the Operation enable state PDS should be done at the time of the OP is ESM state.
*5): It may take time for the state to complete a transition in accordance with an ESM request from the master; pay attention to the timeout setting on the master side and other relevant settings.
For example, if the ESM state is changed from “OP” to “PreOP” with the PDS state at “Operation enabled”, Err.88.2 (ESM requirements during operation error protection) occurs, and deceleration is performed in accordance with 605Eh (Fault reaction option code). However, since the ESM state maintains “OP”, the lower the deceleration rate, the longer it takes for the ESM state to transition to “PreOP”.

3-3 ESC Address Space

MINAS-A6B has the physical address space of 12 Kbyte.
The first 4 Kbyte (0000h to 0FFFh) is used as a register space and subsequent 8 Kbyte is used as the process data RAM area.
Major resisters are shown below. For details of the resisters and other resisters, refer to the datasheets of the IP cores (ET1810/ET1811/ET1812).

ESC Register Byte Address	Length (Byte)	Description	Initial value *1)
ESC Information			
0000h	1	Type	04h
0001h	1	Revision	02h
0002h～0003h	2	Build	0044h
0004h	1	FMMUs supported	03h
0005h	1	SyncManagers supported	04h
0006h	1	RAM Size	08h
0007h	1	Port Descriptor	0Fh
0008h～0009h	2	ESC Features supported	018Ch
Station Address			
0010h～0011h	2	Configured Station Address	-
0012h～0013h	2	Configured Station Alias	-
⋮			
Data Link Layer			
⋮			
0100h～0103h	4	ESC DL Control	-
⋮			
0110h～0111h	2	ESC DL Status	-
Application Layer			
0120h～0121h	2	AL Control	-
0130h～0131h	2	AL Status	-
0134h～0135h	2	AL Status Code	-
⋮			
PDI			
0140h	1	PDI Control	05h
0141h	1	ESC Configuration	0Ch
0150h	1	PDI Configuration	03h
0151h	1	SYNC/LATCH PDI Configuration	66h
0152h～0153h	2	Extended PDI Configuration	-
⋮			

ESC Register Byte Address	Length (Byte)	Description	Initial value *1)
		⋮	
Watchdogs			
0400h～0401h	2	Watchdog Divider	-
0410h～0411h	2	Watchdog Time PDI	-
0420h～0421h	2	Watchdog Time Process Data	-
0440h～0441h	2	Watchdog Status Process Data	-
0442h	1	Watchdog Counter Process Data	-
0443h	1	Watchdog Counter PDI	-
		⋮	
FMMU			
0600h～062Fh	3x16	FMMU[2:0]	-
+0h～3h	4	Logical Start Address	-
+4h～5h	2	Length	-
+6h	1	Logical Start bit	-
+7h	1	Logical Stop bit	-
+8h～9h	2	Physical Start Address	-
+Ah	1	Physical Start bit	-
+Bh	1	Type	-
+Ch	1	Activate	-
+Dh～Fh	3	Reserved	-
		⋮	
Distributed Clocks (DC) － SYNC Out Unit			
0981h	1	Activation	-
		⋮	
0984h	1	Activation Status	-
098Eh	1	SYNC0 Status	-
		⋮	
0990h～0993h	4	Start Time Cyclic Operation/Next SYNC0 Pulse	-
		⋮	
09A0h～09A3h	4	SYNC0 Cycle Time	-
		⋮	

*1) The initial value is at the time of start-up ESC. Thereafter, may change such as CPU firmware.

3-4 SII (Slave Information Interface) EEPROM

MINAS-A6B is equipped with 16 Kbit EEPROM for storing the EtherCAT slave information (ESI).
The table below lists the EEPROM structure. ESI uses the word addressing.

<table>
<tr><th>SII EEPROM Word Address</th><th>+0h</th><th>+1h</th><th>+2h</th><th>+3h</th><th>+4h</th><th>+5h</th><th>+6h</th><th>+7h</th></tr>
<tr><td>0000h</td><td colspan="8">EtherCAT Slave Controller Configuration Area</td></tr>
<tr><td>0008h</td><td colspan="2">Vendor ID</td><td colspan="2">Product Code</td><td colspan="2">Revision Number</td><td colspan="2">Serial Number</td></tr>
<tr><td>0010h</td><td colspan="4">Hardware Delays</td><td colspan="4">Bootstrap Mailbox Config</td></tr>
<tr><td>0018h</td><td colspan="4">Mailbox Sync Man Config</td><td colspan="4"></td></tr>
<tr><td>0020h
⋮
0030h</td><td colspan="8">Reserved</td></tr>
<tr><td>0038h</td><td colspan="6"></td><td>Size</td><td>Version</td></tr>
<tr><td rowspan="6">0040h
⋮</td><td colspan="8">Additional Information (Subdivided in Categories)</td></tr>
<tr><td colspan="8">Category Strings</td></tr>
<tr><td colspan="8">Category Generals</td></tr>
<tr><td colspan="8">Category FMMU</td></tr>
<tr><td colspan="8">Category SyncManager</td></tr>
<tr><td colspan="8">Category TxPDO / RxPDO for each PDO</td></tr>
</table>

3-4-1 SII Area (0000h to 003Fh)

Among the ESC configuration areas (EEPROM word address 0000h to 0007h), Configured Station Alias is automatically read out by ESC and written to the ESC register after the control power is turned on.
To reflect the value after SII EEPROM change to the ESC register, turn off the control power and then on again.
Except for this, the initial value of the IP core (ET1810/ET1811/ET1812) is set.

Note: Basically, do not make changes to other addresses than 0004h (Configured Station Alias) and 0007h (Checksum). 0004h and 0007h need to be changed together. For details, refer to the datasheets of the IP cores (ET1810/ET1811/ET1812).

SII EEPROM Word Address	Name	Description	ESC Register Word Address	Data type	Initial value
0000h	PDI Control	Initial value for the PDI control register	0140h 0141h	Unsigned16	0C05h
0001h	PDI Configuration	Initial value for the PDI configuration register	0150h 0151h	Unsigned16	6603h
0002h	Pulse Length of SYNC Signals	Initial value for the pulse length of SYNC signal	0982h 0983h	Unsigned16	0064h
0003h	Extended PDI Configuration	Initial value for the extended PDI configuration register	0152h 0153h	Unsigned16	0000h
0004h	Configured Station Alias	Initial value for the Station Alias (ID) For details, refer to section 3-8-2.	0012h 0013h	Unsigned16	0000h
0005h	Reserved	Reserved	-	BYTE[4]	-
0006h					
0007h	Checksum	Checksum of ESC configuration area	-	Unsigned16	-

The table below lists the contents of SII EEPROM following the ESC configuration area:

SII EEPROM Word Address	Name	Description	ESC Register Word Address	Data type	Initial value
0008h	Vendor ID	Vendor ID	-	Unsigned32	066Fh
0009h					
000Ah	Product Code	Product code	-	Unsigned32	(Depends on the product)
000Bh					
000Ch	Revision Number	Revision No	-	Unsigned32	(Depends on the product)
000Dh					
000Eh	Serial Number	Serial No	-	Unsigned32	(Depends on the product)
000Fh					
0010h	Execution Delay	Execution delay	-	Unsigned16	0000h
0011h	Port0 Delay	Port 0 delay	-	Int16	0000h
0012h	Port1 Delay	Port 1 delay	-	Int16	0000h
0013h	Reserved	Reserved	-	BYTE[2]	-
0014h	Bootstrap Receive Mailbox Offset	Offset (from master to slave) of receiving Mailbox in Bootstrap state (Not supported)	-	Unsigned16	0000h
0015h	Bootstrap Receive Mailbox Size	Size (from master to slave) of receiving Mailbox in Bootstrap state (Not supported)	-	Unsigned16	0000h
0016h	Bootstrap Send Mailbox Offset	Offset (from slave to master) of sending Mailbox in Bootstrap state (Not supported)	-	Unsigned16	0000h
0017h	Bootstrap Send Mailbox Size	Size (from slave to master) of sending Mailbox in Bootstrap state (Not supported)	-	Unsigned16	0000h
0018h	Standard Receive Mailbox Offset	Offset (from master to slave) of default receiving Mailbox	-	Unsigned16	1000h
0019h	Standard Receive Mailbox Size	Size (from master to slave) of default receiving Mailbox	-	Unsigned16	0100h
001Ah	Standard Send Mailbox Offset	Offset (from slave to master) of default sending Mailbox	-	Unsigned16	1200h
001Bh	Standard Send Mailbox Size	Size (from slave to master) of default sending Mailbox	-	Unsigned16	0100h
001Ch	Mailbox Protocol	Supported Mailbox protocol	-	Unsigned16	0004h
001Dh	Reserved	Reserved	-	BYTE[66]	-
⋮					
003Dh					
003Eh	Size	Size of EEPROM (This driver is equipped with 16 Kbit EEPROM.)	-	Unsigned16	000Fh
003Fh	Version	Version (Fixed at 1.)	-	Unsigned16	0001h
0040h	Data for each category				
⋮					

3-5 Synchronous Communication Mode

The MINAS-A6B series enables you to select synchronous modes below:

Synchronous mode	Description	Synchronization method	Characteristic
DC	Synchronous with SYNC0 event	Synchronize the time information of other slaves based on the time of the first shaft.	•High accuracy •Correction process is required on the master side.
SM2	Synchronous with SM2 event	Synchronize it to the reception timing of RxPDO.	•There is no transmission delay correction and accuracy is low. •It is necessary to keep the transmission timing constant on the controller side. (dedicated hardware etc.)
FreeRun	Asynchronous	Asynchronous	•Process is simple. •Real-time characteristics are insufficient.

3-5-1 DC (synchronous with SYNC0 event)

The MINAS-A6B series is equipped with 64 bits DC (Distributed Clock).
The synchronization of the EtherCAT communication is based on DC.
A slave can be synchronized by sharing the same standard clock (System Time) based on DC.
The local cycle of the slave is triggered by the SYNC0 event.
The process (servo process) of the slave is triggered by the SYNC0 event cycle, so a slave process is always synchronous with the SYNC0 event.
The master needs to perform propagation delay compensation (offset compensation) at the time of communication initialization, and also needs to perform drift compensation periodically.

The figure below shows the flow from the control power-on to the synchronization between the SYNC0 event and slave process (servo process):

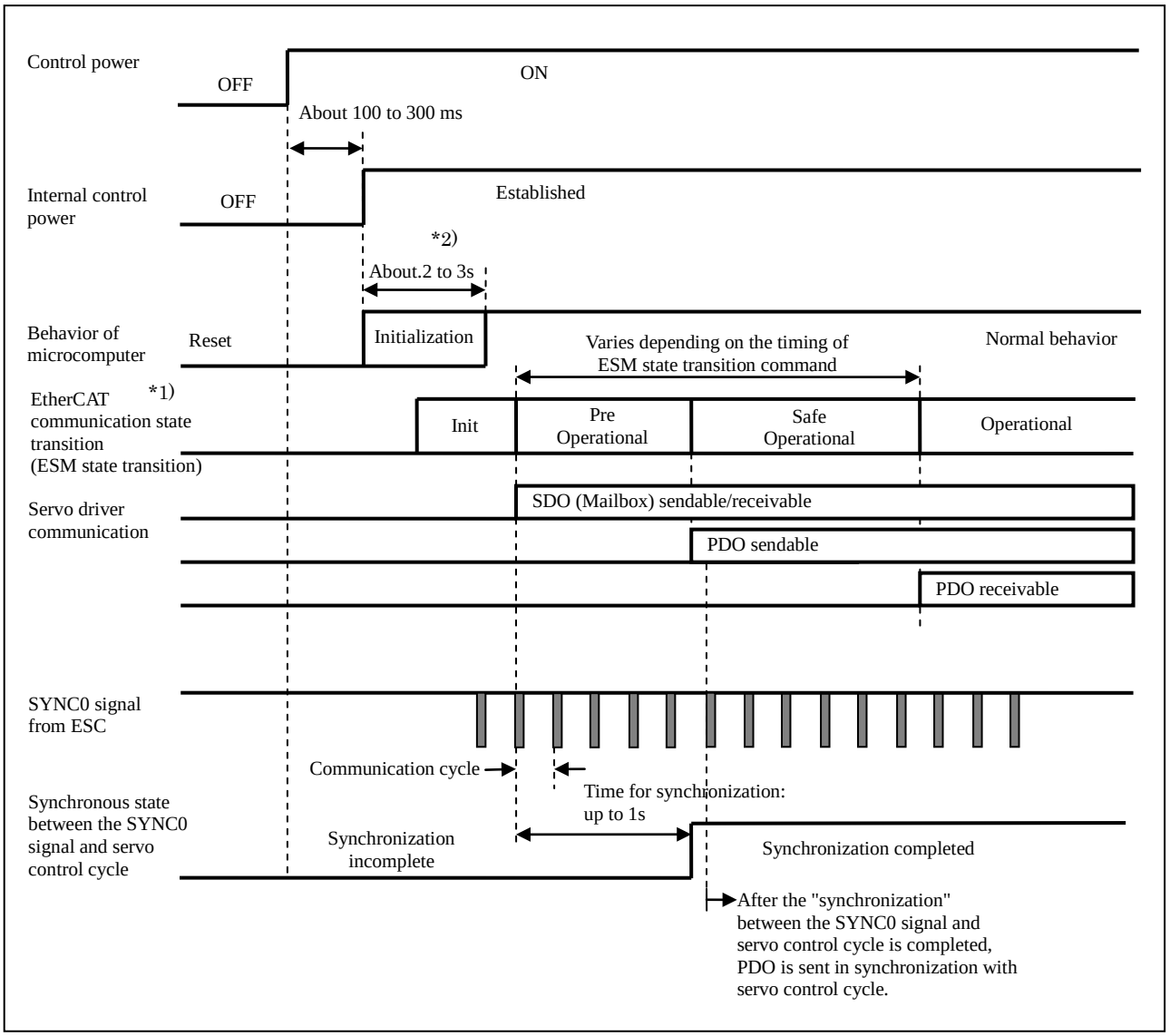

*1) The ESM state of the above figure is an internal state of servo driver.
Check the completion of changes between each state by the host controller (master) side.
*2) Initialization time can be lengthened by 3618h (Power-up wait time).

3-5-2 SM2 (synchronous with SM2 event)

Local cycle of the slave is triggered by the SM2 event.
The process of the slave is triggered by the SM2 event cycle, so slave process is always synchronous with the SM2 event.

Note: Since the SM2 event occurs in sync with the PDO reception, it is necessary to keep the sending timing of the host controller (master) side constant.
If the jitter (dispersion) of sending timing is large, the synchronization will not be completed or an alarm may occur.
If it will cause a problem, use DC (synchronous with SYNC0 event).

The figure below shows the flow from the control power-on to the synchronization between the SM2 event and slave process (servo process):

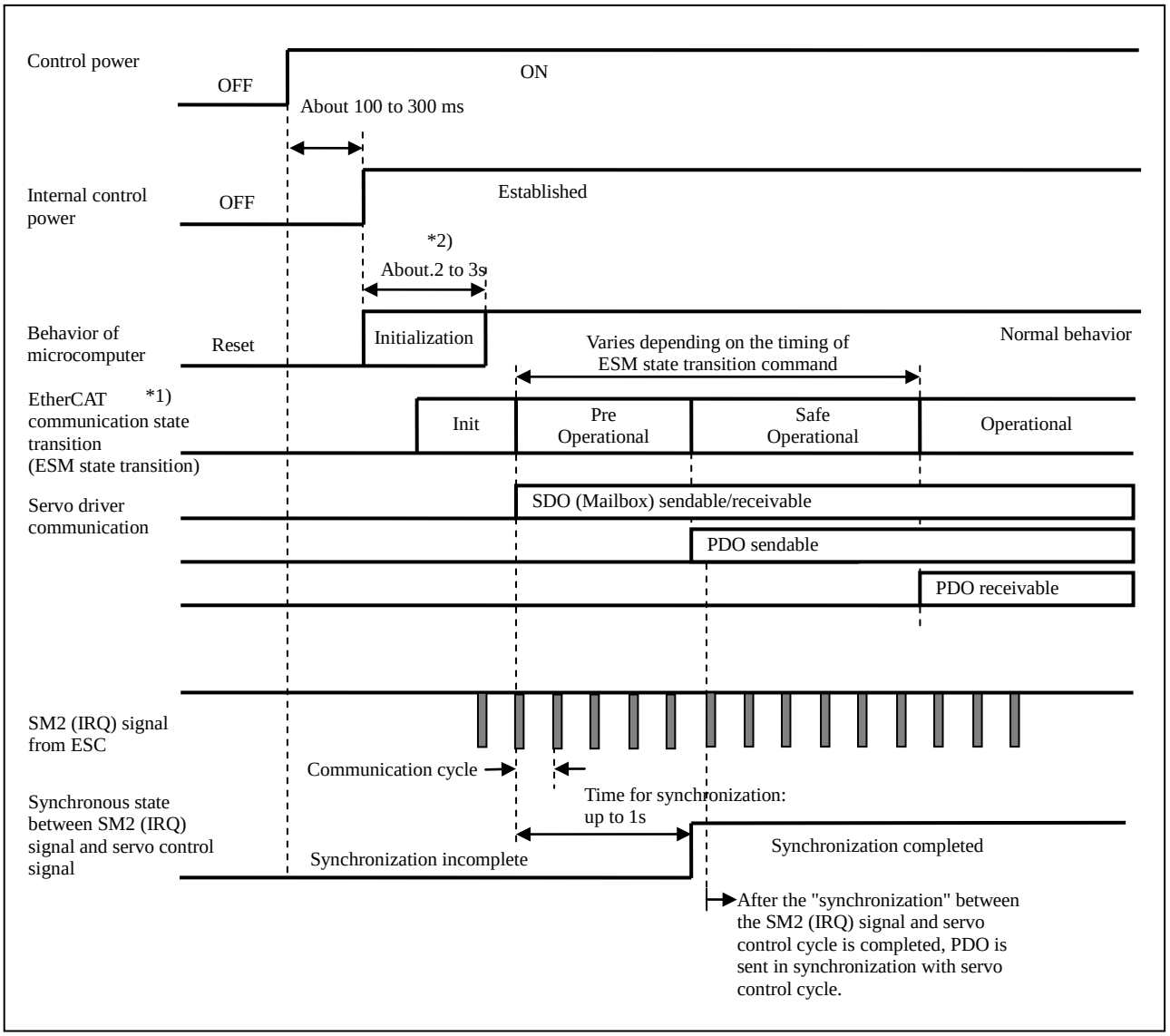

*1) The ESM state of the above figure is an internal state of servo driver.
Check the completion of changes between each state by the host controller (master) side.
*2) Initialization time can be lengthened by 3618h (Power-up wait time).

3-5-3 Free RUN (asynchronous)

The Free RUN mode is started by the local timer interrupt of a slave.
The local cycle runs independent of the communication cycle and master cycle and is asynchronous from them.

The figure below shows the flow during the control power-on:

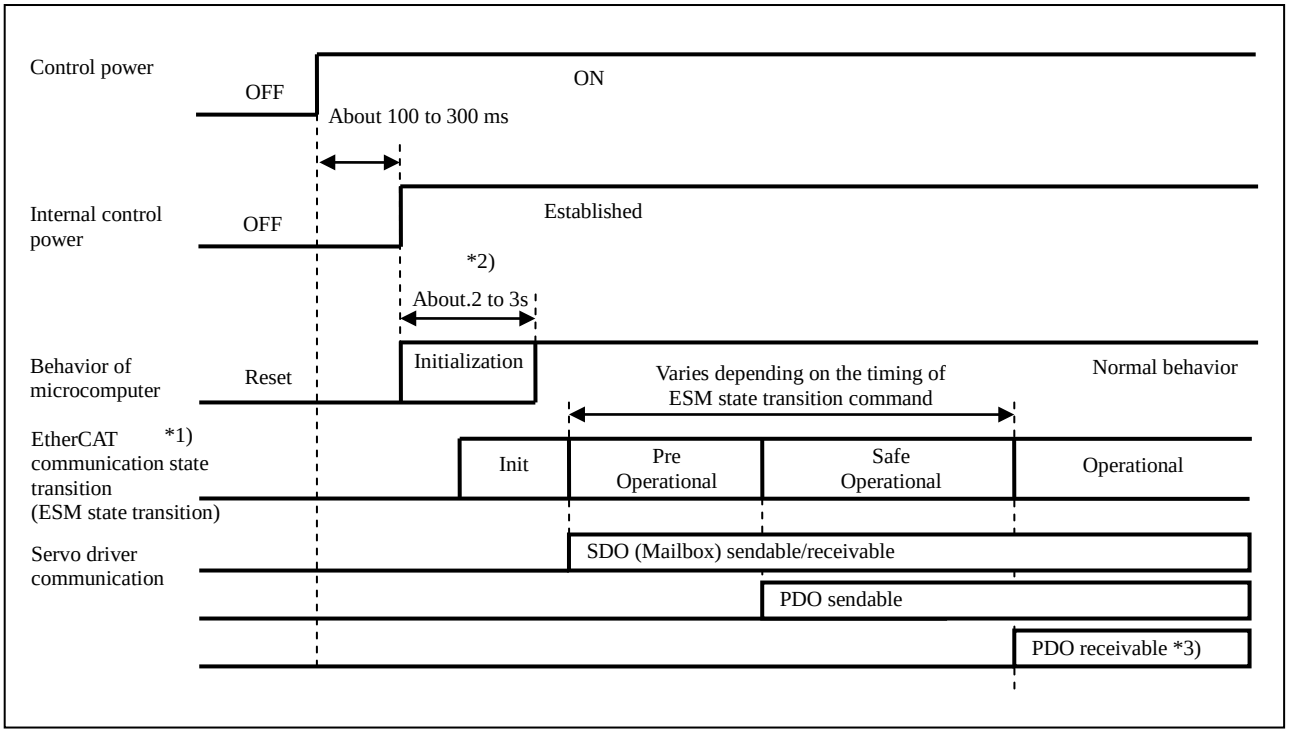

*1) The ESM state of the above figure is an internal state of servo driver.
Check the completion of changes between each state by the host controller (master) side.
*2) Initialization time can be lengthened by 3618h (Power-up wait time).
*3) Do not send PDO with a shorter cycle than 250 μs.

3-6 SDO (Service Data Object)

The MINAS-A6B series supports SDO (Services Data Object).
The data exchange of SDO uses the Mailbox communication. Therefore, be aware that the data update timing of the SDO will be indefinite.
The object setting and various state monitoring of the slaves are enabled by reading/writing data from/into the entry of the object dictionary in the master.
Note)
- It may take some time to read and write operations SDO response.
- Objects that are updated in the PDO do not update the SDO.
  They are overwritten with the values of PDO.

1) Mailbox frame configuration

The figure below shows the frame configuration of Mailbox/SDO.
For more information, refer to ETG standards (ETG1000-5 and ETG1000-6).

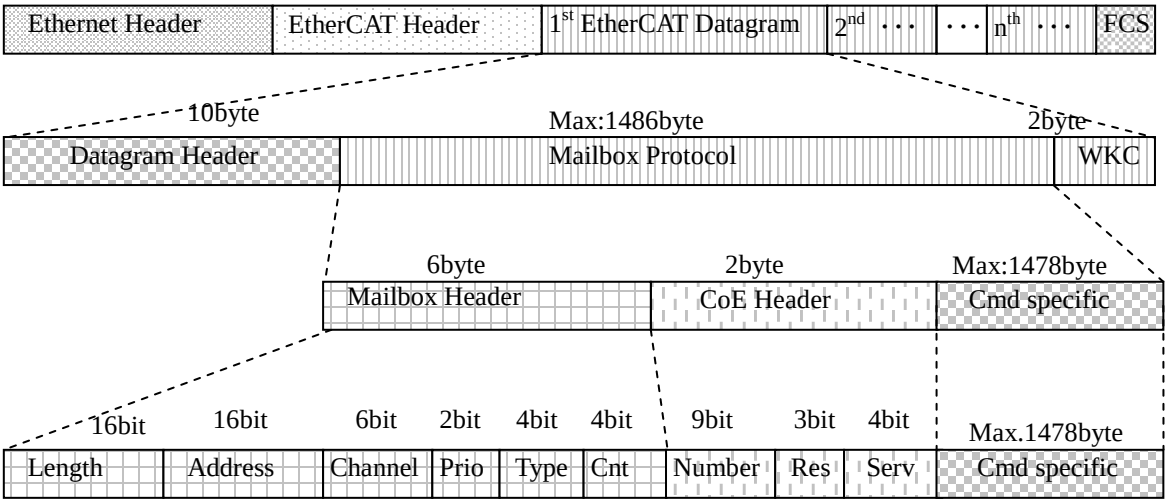

Frame block	Data field	Data type	Function
Mailbox Header	Length	WORD	Data length of mailbox
	Address	WORD	Source station address
	Channel	Unsigned6	(Reserved)
	Priority	Unsigned2	Priority
	Type	Unsigned4	Mailbox type 00h : Error 01h : (Reserved) 02h : EoE (Not supported) 03h : CoE 04h : FoE (Not supported) 05h : SoE (Not supported) 06h-0Eh : (Reserved) 0Fh : VoE (Not supported)
	Cnt	Unsigned3	Mailbox counter
	Reserved	Unsigned1	(Reserved)
CoE Header	Number	Unsigned9	(Reserved)
	Reserved	Unsigned3	(Reserved)
	Service	Unsigned4	Message type
Cmd specific	Size Indicator	Unsigned1	Dataset size enabled
	Transfer Type	Unsigned1	Select Normal/Expedited transfer
	Dataset Size	Unsigned2	Dataset size setting
	Complete Access	Unsigned1	Select how to access object (Not supported)
	Command Specfier	Unsigned3	Upload/download Select request, response, etc.
	Index	WORD	Object index
	Subindex	BYTE	Object sub-index
	□□□	□□□	Data, abort message, etc. of object [Function varies depending on the combination of the following: Size Indicator, Transfer Type, Data Set Size, Complete Access, Command Specfier]

2) Mailbox timeout

With this servo driver, the timeout time in Mailbox communication is set as follows:

- Timeout time for Mailbox request: 100 ms

  If the master transmits a request to the slave (driver) and WKC of transmission data of the request frame is updated, the request is considered to be properly received by the slave.
  Although retry operation is performed until WKC is updated, timeout occurs at the master side if WKC is not updated until this setting time expires.

- Timeout time for Mailbox response: 10 seconds

  If the master receives a response to a request from the slave (driver) and WKC is updated, the response is considered to be properly received by the slave.
  Timeout occurs at the master side if the master does not receive a response where WKC is updated until this setting time expires.
  The maximum time required for the response creation of the slave (driver).

3-6-1 Message at Error Occurrence

1) Abort Message

When the SDO data exchange (read/write) fails, The error message containing Abort code, called Abort message is returned.
The abort message is an error only for the SDO data exchange. There is not any abort message for the PDO data exchange.
The contents of abort code can differ according to the access conditions.

Abort code	Description	
05030000h	Toggle bit not changed	(Not supported)
05040000h	SDO protocol timeout	(Not supported)
05040001h	Client/Server command specifier not valid or unknown	
05040005h	Out of memory	(Not supported)
06010000h	Not supported access to an object	
06010001h	Attempt to read to a write only object	(Not supported)
06010002h	Attempt to write to a read only object	
06010003h	Subindex cannot be written, SI0 must be 0 for write access	
06020000h	The object does not exist in the object directory	
06040041h	The object can not be mapped into the PDO	(Not supported)
06040042h	The number and length of the objects to be mapped would exceed the PDO length	(Not supported)
06040043h	General parameter incompatibility reason	(Not supported)
06040047h	General internal incompatibility in the device	(Not supported)
06060000h	Access failed due to a hardware error	
06070010h	Data type does not match, length of service parameter does not match	
06070012h	Data type does not match, length of service parameter too high	(Not supported)
06070013h	Data type does not match, length of service parameter too low	(Not supported)
06090011h	Subindex does not exist	
06090030h	Value range of parameter exceeded (only for write access)	
06090031h	Value of parameter written too high	
06090032h	Value of parameter written too low	
06090036h	Maximum value is less than minimum value	
08000000h	General error	(Not supported)
08000020h	Data cannot be transferred or stored the application	
08000021h	Data cannot be transferred or stored to the application because of local control	(Not supported)
08000022h	Data cannot be transferred or stored to the application because of the present device state	
08000023h	Object dictionary dynamic generation fails or no object dictionary is present	

2) Emergency Message

A slave notifies the master of the emergency message through the mailbox communication when an error (alarm) occurs in the servo driver (Slave).

When no error (alarm) occurs and only warning occurs, it is not reported.

A maximum of 8 Emergency messages generated while the ESM state is Init are buffered in the order of occurrence, these messages are returned if the ESM state is PreOP or higher.
However, if the number of Emergency messages exceeds 8, messages are discarded in the order of occurrence.

Effective/invalidity of Emergency message transmission can be set up by 10F3h(Diagnosis history)-05h(Flags):bit0.
Emergency message transmission of a default is "effective". (10F3h-05h(Flags):bit0=1)

Refer to Chapter 5-7 for Sub-Index other than Sub-Index:05h.

Index	Sub-Index	Name / Description	Units	Range	Data Type	Access	PDO	Op-mode	EEPROM
10F3h	-	Diagnosis history Reads an error history and enables/disables an emergency message.	-	-	-	-	-	-	-
	05h	Flags	-	0 - 65535	U16	See below	No	ALL	Yes

bit 0	RW	Emergency messages execution permission 0：Emergency message Invalid 1：Whenever new abnormality is detected, emergency message is issued. (Some of the anomaly does not remain in the Diagnosis message)
bit 1	R	Not supported：Fixed at 1
bit 2	R	Not supported：Fixed at 1
bit 3	R	Not supported：Fixed at 0
bit 4	R	Not supported：Fixed at 0
bit 5	R	Diagnosis message clearances information 0：There is error history information 1：No error history information or completion of clearance of error history information (at the time of 10F3h-03h=0 writing) (The value is kept until new error (alarm) occurs.)
bit 6-15	-	Reserved

If error(alarm) occurrence and clearing are repeated multiple times within a short period of time, only the emergency message for the final status may be noticed.

The emergency message is composed of 8 bytes data as shown in the figure below:

Byte	0	1	2	3	4	5	6	7
Description	Error code (*1) (OD:603Fh) (L)	(H)	Error register (*2) (OD:1001h)	Error Field (*3)				

*1) Error code

The same value as 603Fh(Error code) returns to Error code.
The error codes at 0000h to FEFFh are defined in IEC61800-7-201.
FF00h to FFFFh is defined peculiar by the maker and serves as the following contents.

Index	Sub-Index	Name / Description	Units	Range	Data Type	Access	PDO	Op-mode	EEPROM
603Fh	00h	Error code	-	0 - 65535	U16	ro	TxPDO	ALL	No

- Displays an alarm (main number only) / warning occurred in the servo driver.
  When both an alarm and warning does not occur, displays 0000h.
  When an alarm and warning occur at the same time, display the alarm.

  FF**h
  Alarm (main) number (00h to 9Fh)
  warning number(A0h to A9h, ACh, C3h,D2h)

  Example: FF0Ch: 0Ch=12d. Err12.0 (over voltage protection) occurred
  FF55h: 55h=85d. Err85.0 (TxPDO assignment error protection)
  or Err85.1 (RxPDO assignment error protection) occurred

(Note) In the case of Err81.7(SyncManager2/3 error protection) occurs, A000h is displayed as an exception.
(Note) The setting of the alarm number to 603Fh (Error code) is the same timing as the "Emergency Message". Therefore, the value is reflected later than bit3 (fault) of 6041h (Statusword).

*2) Error register

The same value as the one in 1001h (Error register) is returned.

Index	Sub-Index	Name / Description	Units	Range	Data Type	Access	PDO	Op-mode	EEPROM
1001h	00h	Error Register	-	0 - 255	U8	ro	No	ALL	No

Displays the type (state) of an alarm occurred in the servo driver.
When an alarm does not occur, displays 0000h.
No warning is displayed.

bit	Description
0	(Not supported)
1	
2	
3	
4	The alarm which is defined in AL status code *1)
5	(Not supported)
6	(reserved)
7	The alarm which is not defined in AL status code *2)

*1) "The alarm which is defined in AL status code" is which indicate Err80.0-7 and Err81.0-7, Err85.0-7 in the EtherCAT communication related error.
*2) "The alarm which is not defined in AL status code" is which indicate Err88.0-7 in the EtherCAT communication related error and other than EhterCAT communication related error.

The details of alarm refer to Chapter 8.

*3) Error Field

- When abnormalities other than Err81.7(SyncManager2/3 error protection) occur within servo driver:
  The alarm's subnumber is returned to Data [0].
  00h is returned to Data [1] to [4].

Example: Err.16.1 (Torque saturation protection) occurred:

Byte	0	1	2	3	4	5	6	7
Description	Error code		Error register	Data [0]	Data [1]	Data [2]	Data [3]	Data [4]
Value	FF10h		80h	01h	00h	00h	00h	00h

Alarm main number　Alarm sub number

- When an abnormal condition is cleared in the servo driver:
  Data [0] to [4] is 00h cleared.

Example: The alarm state is cleared due to the fault reset:

Byte	0	1	2	3	4	5	6	7
Description	Error code		Error register	Data [0]	Data [1]	Data [2]	Data [3]	Data [4]
Value	0000h		00h	00h	00h	00h	00h	00h

- The SM2/3 setting check at the time of the changes to SafeOp from PreOp is inaccurate in the communication error, and when Err81.7 “SyncManager2/3 error protection” occurs, Error code is set to A000h, Error register is set to 10h, and it returns regular data.
  For more information, refer to ETG standards (ETG1000-6).

Example:

[1] The Length(ESC Register 0812h and 0813h) of SyncManager2 is invalid *1)
[2] The Physical Start Address(ESC Register 0810h and 0811h) of SyncManager2 is invalid (other than 1000h to 2FFFh, odd, etc.)
[3] The SyncManager2 setting is invalid (set to Inactive, 1buffer, Write, etc.)
[4] The Length(ESC Register 081Ah and 081Bh) of SyncManager3 is invalid *1)
[5] The Physical Start Address(ESC Register 0818h and 0819h) of SyncManager3 is invalid (other than 1000h to 2FFFh, odd, etc.)
[6] The SyncManager3 setting is invalid (set to Inactive, 1buffer, Read, etc.)

Byte	0	1	2	3	4	5	6	7
Description	Error code		Error register	Data [0]	Data [1]	Data [2]	Data [3]	Data [4]
[1]	A000h		10h	08h	(L) Length *2) (H)		(L) Length *2) (H)	
[2]	A000h		10h	09h	00h	10h	FEh	2Fh
[3]	A000h		10h	0Ah	24h *3)	00h *3)	01h *3)	00h *3)
[4]	A000h		10h	0Ch	(L) Length *2) (H)		(L) Length *2) (H)	
[5]	A000h		10h	0Dh	00h	10h	FEh	2Fh
[6]	A000h		10h	0Eh	22h *3)	03h *3)	01h *3)	00h *3)

*1) It returns, when the setting is different from the PDO mapping size.
If the PDO mapping size exceeds 32 bytes, Err85.1(RxPDO assignment error protection) occurs, and 01h (the subnumber of the alarm) is returned to Data [0], and 00h is returned to Data [1] to [4].

*2) An actual set value of the PDO mapping size is returned to Length.
For example, when the PDO mapping size is 9, returned values are: Data [1] = 09h, Data [2] = 00h, Data [3] = 09h, and Data [4] = 00h.

*3) When the PDO mapping size is 0, 00h is returned to Data [1] to [4].

3-7 PDO (Process Data Object)

The MINAS-A6B series supports PDO (Process Data Object).
The real time data transfer over EtherCAT is done by the data exchange with PDO (Process Data Object).
PDO is composed of RxPDO transferring from master to slave and TxPDO transferring from slave to master.

	Sender	Receiver
RxPDO	Master	Slave
TxPDO	Slave	Master

(Note) The object updated by PDO should not carry out updating by SDO.

3-7-1 PDO Mapping Object

The PDO mapping is the mapping of the application object from the object dictionary to PDO.
As the PDO mapping table, MINAS-A6B can use the mapping object from 1600h to 1603h for RxPDO and from 1A00h to 1A03h for TxPDO.
The maximum number of application objects to be mapped to a mapping object is as follows:

Maximum PDO data length	RxPDO:32 [byte] TxPDO:32 [byte]

Here, setting example of the PDO mapping is as follows:
For more information on setting method, refer to Chapter 5-4.

<Setting example>
In the case set application object(6040h, 6060h, 607Ah, 60B8h) to 1600h(Receive PDO mapping 1:RxPDO_1).

Object dictionary

Mapping object

Index	Sub	Object contents
1600h	00h	04h
	01h	6040 00 10 h
	02h	6060 00 08 h
	03h	607A 00 20 h
	04h	60B8 00 10 h
	05h	0000 00 00 h
	⋮	⋮
	20h	0000 00 00 h

Application object

		⋮	
6040h	00h	Controlword	U16
6041h	00h	Statusword	U16
		⋮	
6060h	00h	Modes of Operation	I8
6061h	00h	Modes of operation display	I8
		⋮	
607Ah	00h	Target Position	I32
		⋮	
6080h	00h	Max motor speed	U32
		⋮	
60B8h	00h	Touch probe function	U16
60B9h	00h	Touch probe status	U16
		⋮	

Mapping object
on EtherCAT frame
1600h(RxPDO_1) data
PDO_Length = 72bit(9byte)

6040h 00h	6060h 00h	607Ah 00h	60B8h 00h

3-7-2 PDO Assign Object

To exchange the PDO data, assign a PDO mapping table in Sync Manager.
Describe the relationship between PDO mapping table and Sync Manager in the Sync Manager PDO assign object.
MINAS-A6B can use 1C12h for RxPDO (SyncManager2) and 1C13h for TxPDO (SyncManager3), as a Sync Manager PDO assign object.
The maximum number of mapping objects to be mapped to an assign object is as follows:

Maximum number of PDO assigns	RxPDO:4 [Table] TxPDO:4 [Table]

Normally, only one mapping object is sufficient, so a change from default is not required.

The setting example of the Sync Manager PDO assign object is as follows:
For more information on setting method, refer to Chapter 5-4.

<Setting example>
In the case set 1A00h(Transmit PDO mapping 1:TxPDO_1) to assign object 1C13h(Sync manager channel 3).

Object dictionary

SyncManager PDO Assign object

Index	Sub	Object contents
1C13h	00h	01h
	01h	1A00h
	02h	0000h
	03h	0000h
	04h	0000h

PDO mapping object entry of the SyncManager3

TxPDO_1

Mapping object

1A00h	TxPDO_1
1A01h	TxPDO_2
1A02h	TxPDO_3
1A03h	TxPDO_4

3-8 Front Panel Configuration

The figure below shows the front panel configuration in the MINAS-A6B series:

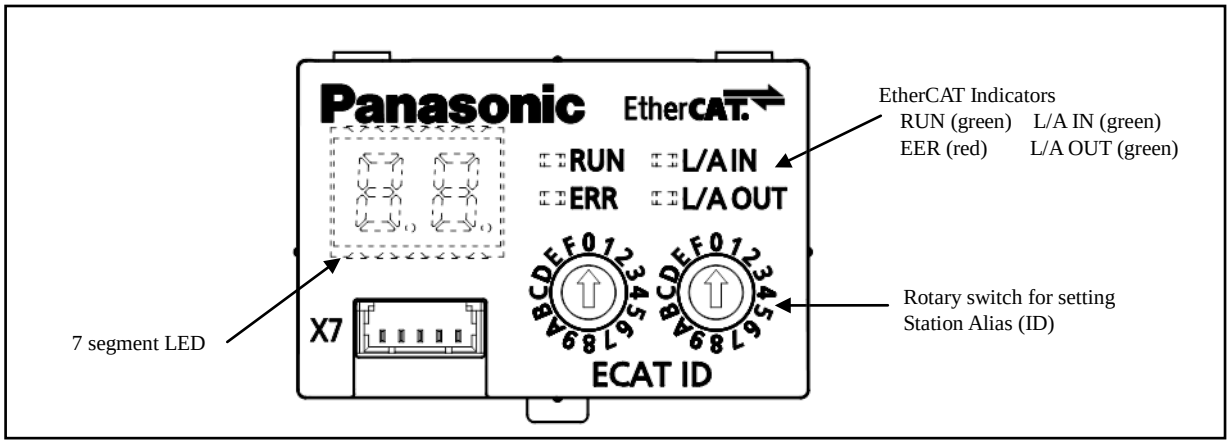

3-8-1 EtherCAT Indicators

MINAS-A6B series has four EtherCAT Indicators (LED).
There are four patterns below indicating the LED status besides ON and OFF:

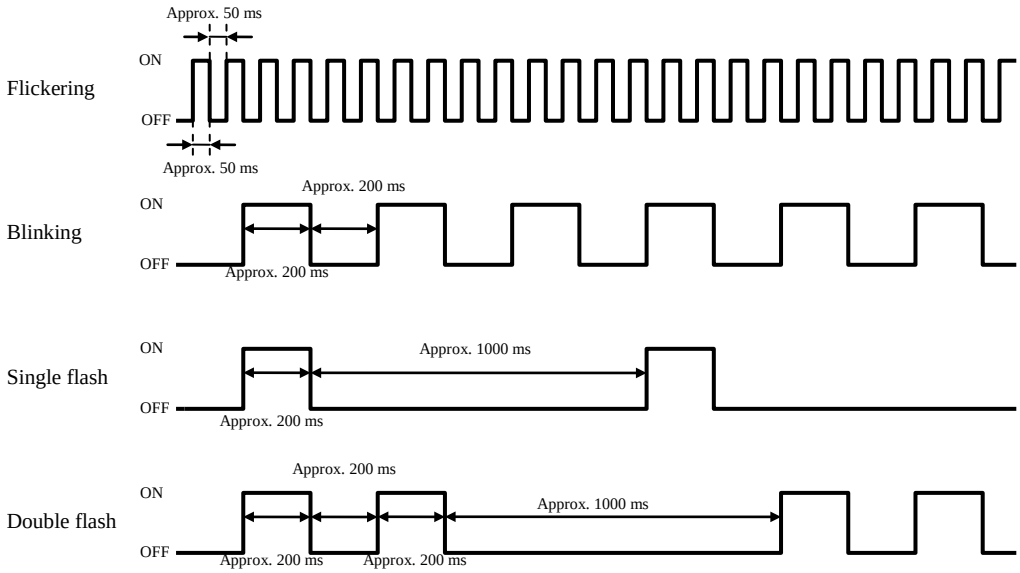

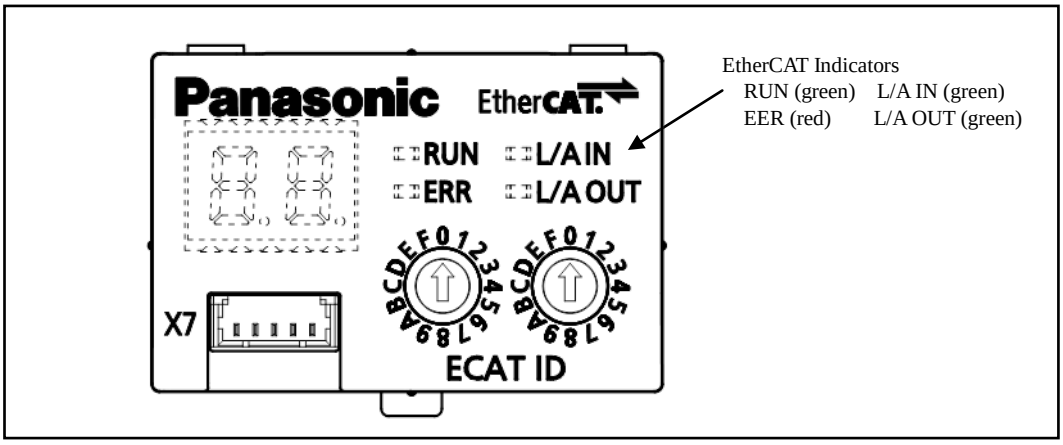

1) RUN

RUN Indicator indicates the ESM (EtherCAT State Machine) status.
LED lights in green.

LED state	Description
OFF	ESM: INIT state
Blinking	ESM: Pre-operational state
Single flash	ESM: Safe-operational state
ON	ESM: Operational state

2) ERR

ERR Indicator indicates an alarm state defined in the AL status code *1).
LED lights in red.
For more information, refer to Chapter 8-1.

LED state	Description
OFF	No occurrence of alarms defined in the AL status code *1)
Blinking	Communication setup error
Single flash	Synchronous event error
Double flash	Application watchdog timeout
Flickering	Initialization error
ON	PDI error *2)

*1) Alarms defined in the AL status code refer to Err80.0 to 7, Err81.0 to 7, and Err85.0 to 7 of the errors related to EtherCAT communication.
*2) MINAS-A6B series is not detected.

3) L/A IN
4) L/A OUT

L/A IN, L/A OUT Indicators indicate the LINK state and activity of each port's physical layer.
LED lights in green.

LED state	Description
OFF	LINK not established
Flickering	LINK established, there are data transmission and reception.
ON	LINK established, there are no data transmission and reception.

If link establishing is late, it might be improved by changing the setting for the bit11(Auto MDI/MDI-X mode) of 3722h"Communication function Extended setup 1".

Index	Sub-Index	Name / Description	Units	Range	Data Type	Access	PDO	Op-Mode	EEPROM
3722h	00h	Communication function extended setup 1	-	-32768 – 32767	I16	rw	No	ALL	Yes
		bit11 : Auto MDI/MDI-X mode 0 : mode0 1 : mode1 If link establishing is late, it might be improved by changing the setting.							

3-8-2 Node addressing (Setting Station alias)

Addressing mode defined by EtherCAT is as follows.

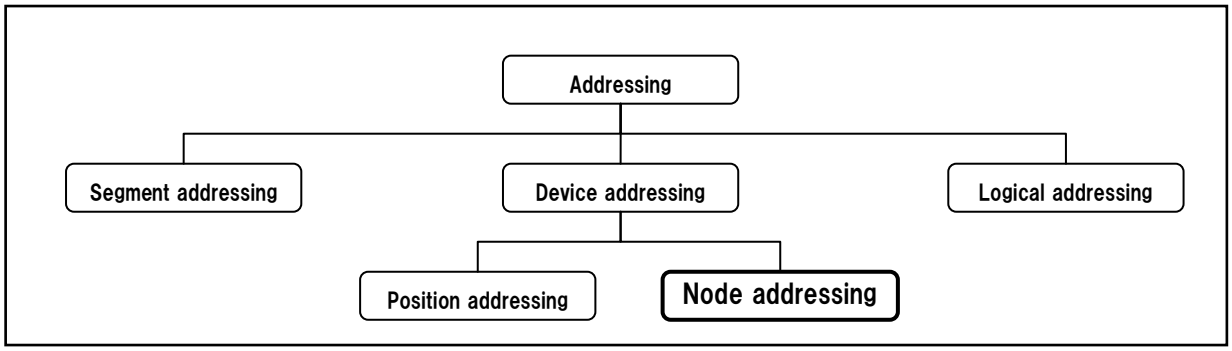

This section describes about the method of Node addressing.
This is peculiar node ID (Station alias) for a master to specify a slave.
In this servo driver, Node addressing has three ways regarding setting means and reading method.

1) Reading the value of SII from Configured Station Alias
Reading the value of 0004h(Configured Station Alias) in the SII from 0012h(Configured Station Alias) of ESC register.

2) Reading the value of rotary switch from Configured Station Alias
Reading the value made of object 3740h(Station alias setup(high)) and front panel rotary switch from 0012h(Configured Station Alias) of ESC register.

3) Reading the value of rotary switch from AL Status Code (Explicit Device ID)
Reading the value made of object 3740h(Station alias setup(high)) and front panel rotary switch from AL Status Code(0134h).

The master reads the set values of the Configured Station Alias (0012h) of the ESC register and sets them to the Configured Station Address (0010h).
Thereby addresses such as FPRD commands used in the mailbox are set.

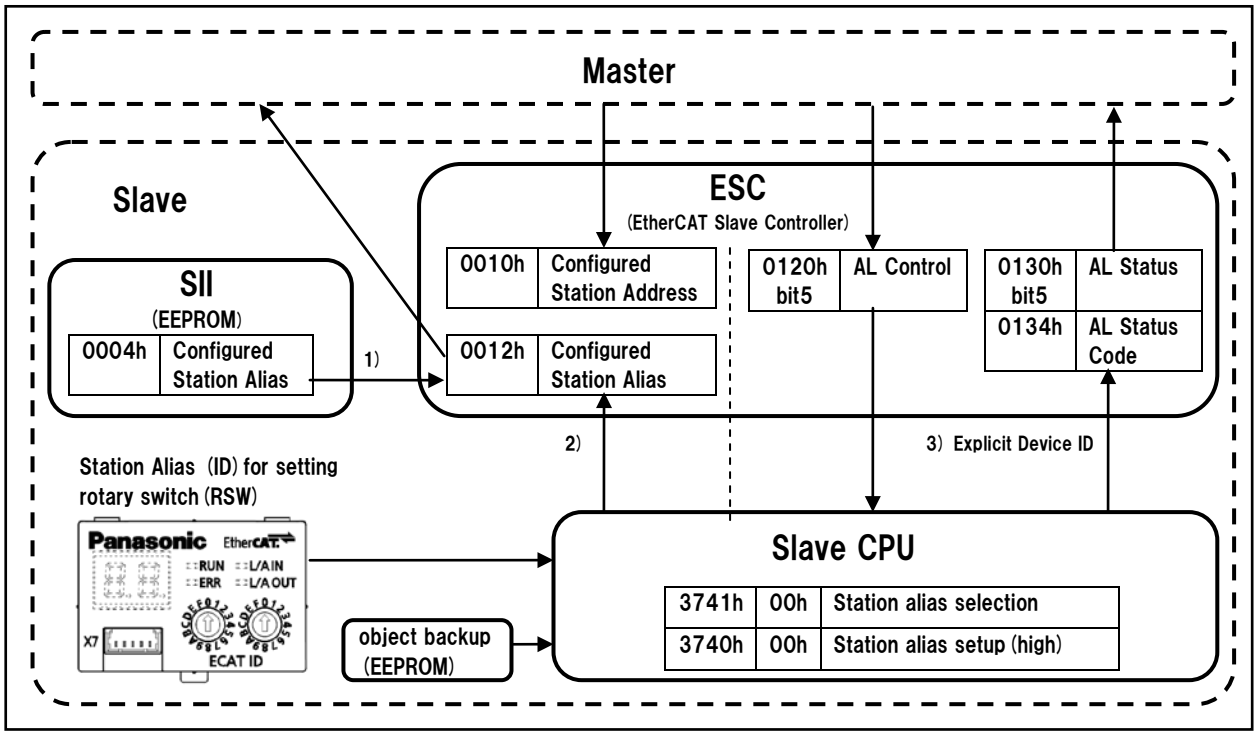

1) Reading the value of SII from Configured Station Alias

This explains the method of reading the value of 0004h(Configured Station Alias) in the SII from 0012h(Configured Station Alias) of ESC register.

Servo driver reads the value of object 3741h(Station alias selection) from backup EEPROM at the control power-on.
If the value is 1, the value saved at 0004h(Configured Station Alias) in the SII into 0012h(Configured Station Alias) of ESC register.
Master reads this value.

2) Reading the value of rotary switch from Configured Station Alias

This explains the method of reading the value made of object 3740h(Station alias setup(high)) and front panel rotary switch from 0012h(Configured Station Alias) of ESC register.

Servo driver reads the value of object 3741h(Station alias selection) from backup EEPROM at the control power-on.
If the value is 0, the value made of object 3740h(Station alias setup(high)) and front panel rotary switch into 0012h(Configured Station Alias) of ESC register.
Master reads this value.

- Selection of station alias setting

Index	Sub-Index	Name / Description	Units	Range	Data Type	Access	PDO	Op-mode	EEPROM
3741h	00h	Station Alias selection	-	0 - 2	I16	rw	No	ALL	Yes

Designates how to set a Station Alias.
* Default configuration is 1.

value	Function
0	The value made of object 3740h and front panel rotary switch is set as station alias. *1)
1	The value saved at 0004h in the SII is set as station alias.
2	For manufacturer's use (Can not be set)

*1) When the setting value of the rotary switch and 3740h are both 0, set 0 to StationAlias.
Note: Specifications are different from MINAS-A5B series.

- How to set the parameters with rotary switch and object
The Station Alias is set by combining a value (lower 8 bits) set by rotary switch and a value (upper 8 bits) in 3740h (Station Alias setup (high)).

Station Alias	
Upper 8 bits	Lower 8 bits
Value set by 3740h	Value set by rotary switch

Index	Sub-Index	Name / Description	Units	Range	Data Type	Access	PDO	Op-mode	EEPROM
3740h	00h	Station Alias setup(high)	-	0 - 255	I16	rw	No	ALL	Yes

Designates upper 8 bits of the Station Alias.

Note: Each setting is enabled when the control power is turned on.
Therefore, if a value is changed after control power-on, the change is not yet effective.
Note that the change will be effective at next control power-on.
To avoid unnecessary problem, do not alter each value after control power-on.

3) Reading the value of rotary switch from AL Status Code (Explicit Device ID)

This explains the method of reading the value made of object 3740h(Station alias setup(high))(upper 8 bits) and front panel rotary switch(lower 8 bits) from AL Status Code(0134h).

The Station Alias read by this method is not that of 0012h (Configured Station Alias) of an ESC register.

(1) Bit5 (ID Request) of AL Control(0120h) is set to 1.
(2) The Station Alias set up by a rotary switch (lower 8 bits) and 3740h(upper 8 bits) returns to AL Status Code(0134h).
(3) 1 returns to bit5 (ID Loaded) of AL Status(0130h).
(4) Bit5 (ID Request) of AL Control(0120h) is set to 0.
(5) 0 returns to bit5 (ID Loaded) of AL Status(0130h).
(6) AL Status Code(0134h) is cleared.

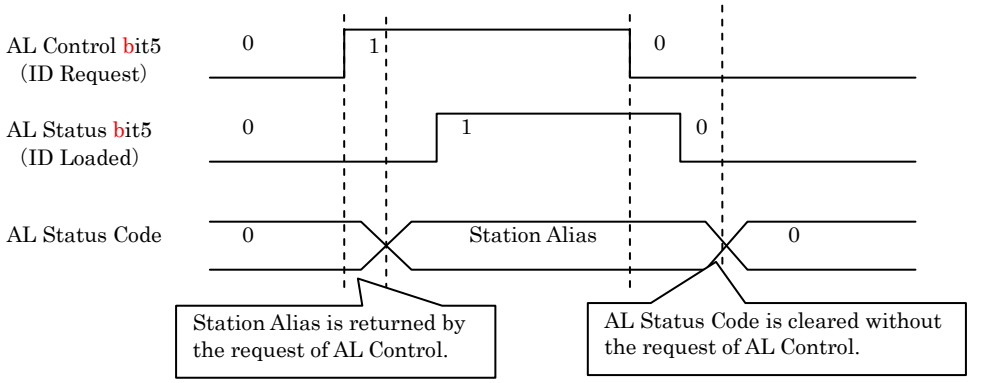

Station alias : It is set up in rotary switch(lower 8 bit) and object 3740h(Station alias setup(high))(upper 8 bit)

In the period of returning Station Alias, if a alarm which is defined in the AL status code(Err80.0-7, Err81.0-7 and Err85.0-7 in the EtherCAT communication related errors) occurs, AL status code of the alarm is returned.
When the alarm is cleared, Station Alias is returned again.
(To clear alarm, refer to Chapter 8-4)

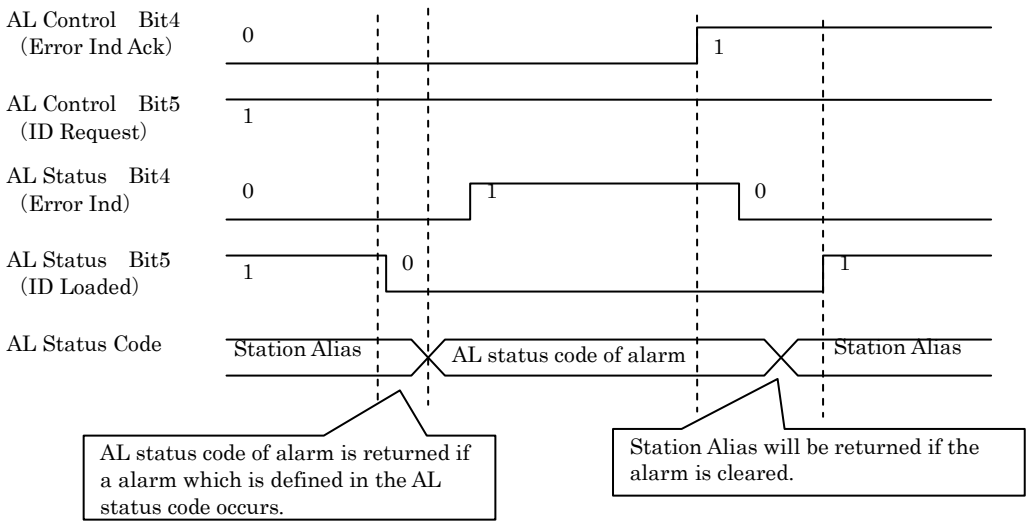

4 Common Object Specification

4-1 Object Configuration

Every object is addressed by 16 bits index which is represented as a 4-digit hexadecimal number and is placed in an object dictionary on an object group basis.

The table below lists the CoE (CANopen over EtherCAT) object dictionary defined in CiA402 and the MINAS-A6B series object dictionary.

Object dictionary defined in CiA402		MINAS-A6B object dictionary		
Index	Description	Index	Description	Refer to
0000h to 0FFFh	Data type area	0000h to 0FFFh	Data type area	-
1000h to 1FFFh	CoE communication area	1000h to 1FFFh	CoE communication area	Chapter 5
2000h to 5FFFh	Manufacturer-specific area	2000h to 2FFFh	Reserved	-
		3000h to 3FFFh	Servo parameter area	Chapter 7
		4000h to 4FFFh	User-specific area	Chapter 6
		5000h to 5FFFh	Reserved	-
6000h to 9FFFh	Profile area	6000h to 6FFFh	Drive profile area	Chapter 6
		7000h to 9FFFh	Reserved	-
A000h to FFFFh	Reserved	A000h to FFFFh	Reserved	-

5 CoE Communication Area (1000h to 1FFFh)

5-1 Object List

Index	Sub-Index	Name
1000h	00h	Device type
1001h	00h	Error register
1008h	00h	Manufacturer device name
1009h	00h	Manufacturer hardware version
100Ah	00h	Manufacturer software version
1010h		Store parameters
	00h	Number of entries
	01h	Save all parameters
1018h		Identity object
	00h	Number of entries
	01h	Vendor ID
	02h	Product code
	03h	Revision number
	04h	Serial number
10F3h		Diagnosis history
	00h	Number of entries
	01h	Maximum messages
	02h	Newest message
	03h	Newest acknowledged message
	04h	New messages available
	05h	Flags
	06h	Diagnosis message 1
	⋮	⋮
	13h	Diagnosis message 14

Index	Sub-Index	Name
1600h		Receive PDO mapping 1
	00h	Number of entries
	01h	1st receive PDO mapped
	02h	2nd receive PDO mapped
	03h	3rd receive PDO mapped
	04h	4th receive PDO mapped
	05h	5th receive PDO mapped
	06h	6th receive PDO mapped
	07h	7th receive PDO mapped
	08h	8th receive PDO mapped
	⋮	⋮
	20h	32nd receive PDO mapped
1601h		Receive PDO mapping 2
	00h	Number of entries
	01h	1st receive PDO mapped
	02h	2nd receive PDO mapped
	03h	3rd receive PDO mapped
	04h	4th receive PDO mapped
	05h	5th receive PDO mapped
	06h	6th receive PDO mapped
	07h	7th receive PDO mapped
	08h	8th receive PDO mapped
	⋮	⋮
	20h	32nd receive PDO mapped
1602h		Receive PDO mapping 3
	00h	Number of entries
	01h	1st receive PDO mapped
	02h	2nd receive PDO mapped
	03h	3rd receive PDO mapped
	04h	4th receive PDO mapped
	05h	5th receive PDO mapped
	06h	6th receive PDO mapped
	07h	7th receive PDO mapped
	08h	8th receive PDO mapped
	⋮	⋮
	20h	32nd receive PDO mapped
1603h		Receive PDO mapping 4
	00h	Number of entries
	01h	1st receive PDO mapped
	02h	2nd receive PDO mapped
	03h	3rd receive PDO mapped
	04h	4th receive PDO mapped
	05h	5th receive PDO mapped
	06h	6th receive PDO mapped
	07h	7th receive PDO mapped
	08h	8th receive PDO mapped
	⋮	⋮
	20h	32nd receive PDO mapped

Index	Sub-Index	Name
1A00h		Transmit PDO mapping 1
	00h	Number of entries
	01h	1st transmit PDO mapped
	02h	2nd transmit PDO mapped
	03h	3rd transmit PDO mapped
	04h	4th transmit PDO mapped
	05h	5th transmit PDO mapped
	06h	6th transmit PDO mapped
	07h	7th transmit PDO mapped
	08h	8th transmit PDO mapped
	⋮	⋮
	20h	32nd transmit PDO mapped
1A01h		Transmit PDO mapping 2
	00h	Number of entries
	01h	1st transmit PDO mapped
	02h	2nd transmit PDO mapped
	03h	3rd transmit PDO mapped
	04h	4th transmit PDO mapped
	05h	5th transmit PDO mapped
	06h	6th transmit PDO mapped
	07h	7th transmit PDO mapped
	08h	8th transmit PDO mapped
	⋮	⋮
	20h	32nd transmit PDO mapped
1A02h		Transmit PDO mapping 3
	00h	Number of entries
	01h	1st transmit PDO mapped
	02h	2nd transmit PDO mapped
	03h	3rd transmit PDO mapped
	04h	4th transmit PDO mapped
	05h	5th transmit PDO mapped
	06h	6th transmit PDO mapped
	07h	7th transmit PDO mapped
	08h	8th transmit PDO mapped
	⋮	⋮
	20h	32nd transmit PDO mapped
1A03h		Transmit PDO mapping 4
	00h	Number of entries
	01h	1st transmit PDO mapped
	02h	2nd transmit PDO mapped
	03h	3rd transmit PDO mapped
	04h	4th transmit PDO mapped
	05h	5th transmit PDO mapped
	06h	6th transmit PDO mapped
	07h	7th transmit PDO mapped
	08h	8th transmit PDO mapped
	⋮	⋮
	20h	32nd transmit PDO mapped
1C00h		Sync manager communication type
	00h	Number of used sync manager channels
	01h	Communication type sync manager 0
	02h	Communication type sync manager 1
	03h	Communication type sync manager 2
	04h	Communication type sync manager 3

Index	Sub-Index	Name
1C12h		Sync manager channel 2
	00h	Number of assigned PDOs
	01h	PDO mapping object index of assigned RxPDO 1
	02h	PDO mapping object index of assigned RxPDO 2
	03h	PDO mapping object index of assigned RxPDO 3
	04h	PDO mapping object index of assigned RxPDO 4
1C13h		Sync manager channel 3
	00h	Number of assigned PDOs
	01h	PDO mapping object index of assigned TxPDO 1
	02h	PDO mapping object index of assigned TxPDO 2
	03h	PDO mapping object index of assigned TxPDO 3
	04h	PDO mapping object index of assigned TxPDO 4
1C32h		Sync manager 2 synchronization
	00h	Number of sub-objects
	01h	Sync mode
	02h	Cycle time
	03h	Shift time
	04h	Sync modes supported
	05h	Minimum cycle time
	06h	Calc and copy time
	08h	Command
	09h	Delay time
	0Ah	Sync0 cycle time
	0Bh	Cycle time too small
	0Ch	SM-event missed
	0Dh	Shift time too short
	0Eh	RxPDO toggle failed
	20h	Sync error
1C33h		Sync manager 3 synchronization
	00h	Number of sub-objects
	01h	Sync mode
	02h	Cycle time
	03h	Shift time
	04h	Sync modes supported
	05h	Minimum cycle time
	06h	Calc and copy time
	08h	Command
	09h	Delay time
	0Ah	Sync0 cycle time
	0Bh	Cycle time too small
	0Ch	SM-event missed
	0Dh	Shift time too short
	0Eh	RxPDO toggle failed
	20h	Sync error

5-2 Device Information

This section describes the objects for the device information of slaves.

Index	Sub-Index	Name / Description	Units	Range	Data Type	Access	PDO	Op-mode	EEPROM
1000h	00h	Device type	-	0 - 4294967295	U32	ro	No	ALL	No
		• Displays a device type. The value of the servo driver is fixed at 00020192h.							
1001h	00h	Error register	-	0 - 255	U8	ro	No	ALL	No

Displays the type (state) of an alarm occurred in the servo driver.
When an alarm does not occur, displays 0000h.
No warning is displayed.

bit	Description
0	(Not supported)
1	
2	
3	
4	The alarm which is defined in AL status code *1)
5	(Not supported)
6	(reserved)
7	The alarm which is not defined in AL status code *2)

*1) "The alarm which is defined in AL status code" indicate Err80.0-7 and Err81.0-7, Err85.0-7 in the EtherCAT communication related error.
*2) "The alarm which is not defined in AL status code" indicate Err88.0-7 in the EtherCAT communication related error and other than EhterCAT communication related error.

The details of alarm refer to Chapter 8.

1008h	00h	Manufacture device name	-	-	VS	ro	No	ALL	No

Displays a product model with 16 characters. If it is less than 16 characters long, add spaces (20h).
Example:

byte	0	1	2	3	4	5	6	7	8	9	10	11	12	13	14	15
character	M	A	D	L	N	1	5	B	E	(space)						

1009h	00h	Manufacture hardware version	-	-	VS	ro	No	ALL	No

Displays a product hardware version with 16 characters. If it is less than 16 characters long, add spaces (20h).
Example: *Hardware version: 1.23:

byte	0	1	2	3	4	5	6	7	8	9	10	11	12	13	14	15
character	V	1	.	2	3	(space)										
Application	(fixed)	Hardware version														

100Ah	00h	Manufacturer software version	-	-	VS	ro	No	ALL	No

Displays a product software version 3 with 16 characters. If it is less than 16 characters long, add spaces (20h).
Example: *Software version3: 1.23:

byte	0	1	2	3	4	5	6	7	8	9	10	11	12	13	14	15
character	V	1	.	2	3	(space)										
Application	(fixed)	Software version3														

Index	Sub-Index	Name / Description	Units	Range	Data Type	Access	PDO	Op-mode	EEPROM
1018h	-	Identity object Displays device information.	-	-	-	-	-	-	-
	00h	Number of entries Represents the number of sub-indexes for this object. The value is fixed at 04h.	-	0 - 255	U8	ro	No	ALL	No
	01h	Vendor ID Displays the EtherCAT Vender ID. The value is fixed at 0000066Fh.	-	0 - 4294967295	U32	ro	No	ALL	No
	02h	Product code Displays a product code. Values vary depending on product models. See the reference specifications “SX-DSV03190”. Driver series judgment is possible from the value of bit31 to 28.	-	0 - 4294967295	U32	ro	No	ALL	No
	03h	Revision number Displays a revision number. Example) In case of 1.23.	-	0 - 4294967295	U32	ro	No	ALL	No
	04h	Serial number - Displays a product serial number. - In the enhanced software version 1 and later (Ver1.02 and later), if the sequential number portion of product serial numbers is "A000" to "Z999", bit 15-0 of this object is FFFFh. In that event, refer to 4D15h (Drive serial number). Example) When nameplate product serial number is "P171020001N"	-	0 - 4294967295	U32	ro	No	ALL	No
3744h	00h	Software version Displays software version1 and software version2. Example) In case of the Software version1: 1.23 and Software version2: 4.56	—	-2147483648 – 2147483647	I32	ro	No	ALL	Yes

bit	31-28	27-24	23-20	19-16	15-12	11-8	7-4	3-0
value (hex)	0	0	0	1	0	0	2	3
Application	Major revision				Minor revision			

	bit31-28
MINAS-A6B series	6
MINAS-A5B series	5 or D

Sequential number portion

bit	31-28	27-24	23-20	19-16	15-12	11-8	7-4	3-0
value (hex)	1	7	1	0	0	0	0	1

bit	31-28	27-24	23-20	19-16	15-12	11-8	7-4	3-0
value (hex)	0	1	2	3	0	4	5	6
Application	(reserved)	Software version 1			(reserved)	Software version 2		
		(major)	(minor)			(major)	(minor)	

5-3 Sync Manager Communication Type (1C00h)

Sets the object in 1C00h so as to allocate each Sync Manager to an operation mode.
This value of object is fixed this servo driver.

Index	Sub-Index	Name / Description	Units	Range	Data Type	Access	PDO	Op-mode	EEPROM
1C00h		Sync manager communication type	-	-	-	-	-	-	-
		Sets the operation mode of each Sync Manager.							
	00h	Number of used sync manager channels	-	0 - 255	U8	ro	No	ALL	No
		Represents the number of sub-indexes for this object. The value is fixed at 4.							
	01h	Communication type sync manager 0	-	0 - 4	U8	ro	No	ALL	No
		Sets the application of Sync Manager 0. 0: Not used 1: Reception through Mailbox (master to slave), 3: RxPDO (master to slave) 2: Sending through Mailbox (slave to master), 4: TxPDO (slave to master) Sync Manager 0 is used for receiving data through Mailbox, so the value is fixed at 1.							
	02h	Communication type sync manager 1	-	0 - 4	U8	ro	No	ALL	No
		Sets the application of Sync Manager 1. 0: Not used 1: Reception through Mailbox (master to slave), 3: RxPDO (master to slave) 2: Sending through Mailbox (slave to master), 4: TxPDO (slave to master) Sync Manager 1 is used for sending data through Mailbox, so the value is fixed at 2.							
	03h	Communication type sync manager 2	-	0 - 4	U8	ro	No	ALL	No
		Sets the application of Sync Manager 2. 0: Not used 1: Reception through Mailbox (master to slave), 3: RxPDO (master to slave) 2: Sending through Mailbox (slave to master), 4: TxPDO (slave to master) Sync Manager 2 is used for process data output (RxPDO), so the value is fixed at 3.							
	04h	Communication type sync manager 3	-	0 - 4	U8	ro	No	ALL	No
		Sets the application of Sync Manager 3. 0: Not used 1: Reception through Mailbox (master to slave), 3: RxPDO (master to slave) 2: Sending through Mailbox (slave to master), 4: TxPDO (slave to master) Sync Manager 3 is used for process data input (TxPDO), so the value is fixed at 4.							

5-4 PDO (Process Data Object) Mapping

For the outline of the PDO mapping, also refer to Section 3-7-1 and Section 3-7-2.

5-4-1 PDO Assign Object (1C12h to 1C13h)

Sets the object in 1C12h and 1C13h so as to allocate a PDO mapping table to a Sync Manager.

Index	Sub-Index	Name / Description	Units	Range	Data Type	Access	PDO	Op-mode	EEPROM
1C12h	-	Sync manager channel 2	-	-	-	-	-	-	-
		Sets the PDO mapping object entry for Sync Manager 2. Sync Manager 2 is used as the process data output (RxPDO). It is possible to change this object value only when the ESM state is PreOP. Note: If the sub-index 00h is not cleared to 0 once, 01h - 04h cannot be changed.							
	00h	Number of assigned PDOs	-	0 - 4	U8	rw	No	ALL	Yes
		Represents the number of assign object for this object.							
	01h	PDO mapping object index of assigned RxPDO 1	-	1600h - 1603h	U16	rw	No	ALL	Yes
		Designate the PDO mapping object to be used.							
	02h	PDO mapping object index of assigned RxPDO 2	-	1600h - 1603h	U16	rw	No	ALL	Yes
		Designate the PDO mapping object to be used.							
	03h	PDO mapping object index of assigned RxPDO 3	-	1600h - 1603h	U16	rw	No	ALL	Yes
		Designate the PDO mapping object to be used.							
	04h	PDO mapping object index of assigned RxPDO 4	-	1600h - 1603h	U16	rw	No	ALL	Yes
		Designate the PDO mapping object to be used.							
1C13h	-	Sync manager channel 3	-	-	-	-	-	-	-
		Sets the PDO mapping object entry for Sync Manager 3. Sync Manager 3 is used as the process data input (TxPDO). It is possible to change this object value only when the ESM state is PreOP. Note: If the sub-index 00h is not cleared to 0 once, 01h - 04h cannot be changed.							
	00h	Number of assigned PDOs	-	0 - 4	U8	rw	No	ALL	Yes
		Represents the number of assign object for this object.							
	01h	PDO mapping object index of assigned TxPDO 1	-	1A00h - 1A03h	U16	rw	No	ALL	Yes
		Designate the PDO mapping object to be used.							
	02h	PDO mapping object index of assigned TxPDO 2	-	1A00h - 1A03h	U16	rw	No	ALL	Yes
		Designate the PDO mapping object to be used.							
	03h	PDO mapping object index of assigned TxPDO 3	-	1A00h - 1A03h	U16	rw	No	ALL	Yes
		Designate the PDO mapping object to be used.							
	04h	PDO mapping object index of assigned TxPDO 4	-	1A00h - 1A03h	U16	rw	No	ALL	Yes
		Designate the PDO mapping object to be used.							

NOTE) It is possible to change subindex 01h-04h of 1C12h,1C13h value only when the ESM state is PreOP and subindex00h=0. Abort Code(06010003h) is returned in any other state.
After changing the settings, the PDO assign object is reflected when the sub-index 00h is set to number of subindexes to be used and the ESM state transitions to SafeOP.

5-4-2 PDO Mapping Object (1600h to 1603h, 1A00h to 1A03h)

As the PDO mapping table, the object from 1600h to 1603h can be used for RxPDO and the object from 1A00h to 1A03h for TxPDO.
The subindex 01h or later indicate the information of the application object to be mapped.

Index	Sub-Index	Name / Description	Units	Range	Data Type	Access	PDO	Op-mode	EEP ROM
1600h	-	Receive PDO mapping 1	-	-	-	-	-	-	-
		Indicates an RxPDO object. It is possible to change this object value only when the ESM state is PreOP. Note: If the sub-index 00h is not cleared to 0 once, 01h - 20h cannot be changed.							
	00h	Number of entries	-	0 - 32	U8	rw	No	ALL	Yes
		Set the number of RxPDO objects mapped to this object.							
	01h	1st Receive PDO mapped	-	0 - 4294967295	U32	rw	No	ALL	Yes
		Set an object to be mapped 1st.							
		bit: 31 ... 16 / 15 ... 08 / 07 ... 01 Index number / Subindex number / Bit length							
	02h	2nd Receive PDO mapped	-	0 - 4294967295	U32	rw	No	ALL	Yes
		Set an object to be mapped 2nd. The same setting method as the sub-index 01h.							
	03h	3rd Receive PDO mapped	-	0 - 4294967295	U32	rw	No	ALL	Yes
		Set an object to be mapped 3rd. The same setting method as the sub-index 01h.							
	04h	4th Receive PDO mapped	-	0 - 4294967295	U32	rw	No	ALL	Yes
		Set an object to be mapped 4th. The same setting method as the sub-index 01h.							
	05h	5th Receive PDO mapped	-	0 - 4294967295	U32	rw	No	ALL	Yes
		Set an object to be mapped 5th. The same setting method as the sub-index 01h.							
	06h	6th Receive PDO mapped	-	0 - 4294967295	U32	rw	No	ALL	Yes
		Set an object to be mapped 6th. The same setting method as the sub-index 01h.							
	07h	7th Receive PDO mapped	-	0 - 4294967295	U32	rw	No	ALL	Yes
		Set an object to be mapped 7th. The same setting method as the sub-index 01h.							
	08h	8th Receive PDO mapped	-	0 - 4294967295	U32	rw	No	ALL	Yes
		Set an object to be mapped 8th. The same setting method as the sub-index 01h.							
	⋮	⋮							
	20h	32nd Receive PDO mapped	-	0 - 4294967295	U32	rw	No	ALL	Yes
		Set an object to be mapped 32nd. The same setting method as the sub-index 01h.							
1601h	-	Receive PDO mapping 2	-	-	-	-	-	-	-
		The specification of the subindex, etc. is the same as 1600h.							
1602h	-	Receive PDO mapping 3	-	-	-	-	-	-	-
		The specification of the subindex, etc. is the same as 1600h.							
1603h	-	Receive PDO mapping 4	-	-	-	-	-	-	-
		The specification of the subindex, etc. is the same as 1600h.							

NOTE)
- Please do not overlap the same object mapping.
  The action at the time of carrying out a duplication setup is not guaranteed.
- It is possible to change subindex 01h-20h of 1600h-1603h value only when the ESM state is PreOP and subindex00h=0. Abort Code(06010003h) is returned in any other state.
  After changing the settings, the PDO mapping object is reflected when the sub-index 00h is set to number of subindexes to be used and the ESM state transitions to SafeOP.

Index	Sub-Index	Name / Description	Units	Range	Data Type	Access	PDO	Op-mode	EEPROM
1A00h	-	Transmit PDO mapping 1	-	-	-	-	-	-	-
		Indicates the TxPDO object. It is possible to change this object value only when the ESM state is PreOP. Note: If the sub-index 00h is not cleared to 0 once, 01h - 20h cannot be changed.							
	00h	Number of entries	-	0 - 32	U8	rw	No	ALL	Yes
		Set the number of TxPDO objects mapped to this object.							
	01h	1st Transmit PDO mapped	-	0 - 4294967295	U32	rw	No	ALL	Yes
		Set an object to be mapped 1st.							
		bit: 31 ... 16 = Index number; 15 ... 08 = Subindex number; 07 ... 01 = Bit length							
	02h	2nd Transmit PDO mapped	-	0 - 4294967295	U32	rw	No	ALL	Yes
		Set an object to be mapped 2nd. The same setting method as the sub-index 01h.							
	03h	3rd Transmit PDO mapped	-	0 - 4294967295	U32	rw	No	ALL	Yes
		Set an object to be mapped 3rd. The same setting method as the sub-index 01h.							
	04h	4th Transmit PDO mapped	-	0 - 4294967295	U32	rw	No	ALL	Yes
		Set an object to be mapped 4th. The same setting method as the sub-index 01h.							
	05h	5th Transmit PDO mapped	-	0 - 4294967295	U32	rw	No	ALL	Yes
		Set an object to be mapped 5th. The same setting method as the sub-index 01h.							
	06h	6th Transmit PDO mapped	-	0 - 4294967295	U32	rw	No	ALL	Yes
		Set an object to be mapped 6th. The same setting method as the sub-index 01h.							
	07h	7th Transmit PDO mapped	-	0 - 4294967295	U32	rw	No	ALL	Yes
		Set an object to be mapped 7th. The same setting method as the sub-index 01h.							
	08h	8th Transmit PDO mapped	-	0 - 4294967295	U32	rw	No	ALL	Yes
		Set an object to be mapped 8th. The same setting method as the sub-index 01h.							
	⋮	⋮							
	20h	32nd Transmit PDO mapped	-	0 - 4294967295	U32	rw	No	ALL	Yes
		Set an object to be mapped 32nd. The same setting method as the sub-index 01h.							
1A01h	-	Transmit PDO mapping 2	-	-	-	-	-	-	-
		The specification of the subindex, etc. is the same as 1A00h.							
1A02h	-	Transmit PDO mapping 3	-	-	-	-	-	-	-
		The specification of the subindex, etc. is the same as 1A00h.							
1A03h	-	Transmit PDO mapping 4	-	-	-	-	-	-	-
		The specification of the subindex, etc. is the same as 1A00h.							

NOTE)

- Please do not overlap the same object mapping.
  The action at the time of carrying out a duplication setup is not guaranteed.
- It is possible to change subindex 01h-20h of 1A00h-1A03h value only when the ESM state is PreOP and subindex00h=0. Abort Code(06010003h) is returned in any other state.
  After changing the settings, the PDO mapping object is reflected when the sub-index 00h is set to number of subindexes to be used and the ESM state transitions to SafeOP.

5-4-3 Default PDO Mapping

This section describes the default PDO mapping definition in MINAS-A6B.
This default PDO mapping provides the values of the PDO mapping objects at the time of shipment.
This mapping is defined in ESI File (.xml format).
Moreover, a shipment value is determined in the following formats.

bit	31 … 16	15 … 08	07 … 01
	Index No.	Sub-Index No.	bit size

- PDO mapping 1
  For position control mode (Touch probe available)

	Index	Sub-Index	Size (bit)	Name	Shipment value
RxPDO (1600h)	6040h	00h	16	Controlword	60400010h
	6060h	00h	8	Modes of operation	60600008h
	607Ah	00h	32	Target Position	607A0020h
	60B8h	00h	16	Touch probe function	60B80010h
TxPDO (1A00h)	603Fh	00h	16	Error code	603F0010h
	6041h	00h	16	Statusword	60410010h
	6061h	00h	8	Modes of operation display	60610008h
	6064h	00h	32	Position actual value	60640020h
	60B9h	00h	16	Touch probe status	60B90010h
	60BAh	00h	32	Touch probe pos1 pos value	60BA0020h
	60F4h	00h	32	Following error actual value	60F40020h
	60FDh	00h	32	Digital inputs	60FD0020h

- PDO mapping 2
  For position, velocity, and torque control mode (Touch probe available)

	Index	Sub-Index	Size (bit)	Name	Shipment value
RxPDO (1601h)	6040h	00h	16	Controlword	60400010h
	6060h	00h	8	Modes of operation	60600008h
	6071h	00h	16	Target Torque	60710010h
	607Ah	00h	32	Target Position	607A0020h
	6080h	00h	32	Max motor speed	60800020h
	60B8h	00h	16	Touch probe function	60B80010h
	60FFh	00h	32	Target Velocity	60FF0020h
TxPDO (1A01h)	603Fh	00h	16	Error code	603F0010h
	6041h	00h	16	Statusword	60410010h
	6061h	00h	8	Modes of operation display	60610008h
	6064h	00h	32	Position actual value	60640020h
	606Ch	00h	32	Velocity actual value	606C0020h
	6077h	00h	16	Torque actual value	60770010h
	60B9h	00h	16	Touch probe status	60B90010h
	60BAh	00h	32	Touch probe pos1 pos value	60BA0020h
	60FDh	00h	32	Digital inputs	60FD0020h

- PDO mapping 3

For position and velocity control mode (Touch probe and torque limit available)

	Index	Sub-Index	Size (bit)	Name	Shipment value
RxPDO (1602h)	6040h	00h	16	Controlword	60400010h
	6060h	00h	8	Modes of operation	60600008h
	6072h	00h	16	Max torque	60720010h
	607Ah	00h	32	Target Position	607A0020h
	60B8h	00h	16	Touch probe function	60B80010h
	60FFh	00h	32	Target Velocity	60FF0020h
TxPDO (1A02h)	603Fh	00h	16	Error code	603F0010h
	6041h	00h	16	Statusword	60410010h
	6061h	00h	8	Modes of operation display	60610008h
	6064h	00h	32	Position actual value	60640020h
	606Ch	00h	32	Velocity actual value	606C0020h
	6077h	00h	16	Torque actual value	60770010h
	60B9h	00h	16	Touch probe status	60B90010h
	60BAh	00h	32	Touch probe pos1 pos value	60BA0020h
	60FDh	00h	32	Digital inputs	60FD0020h

- PDO mapping 4

For position, velocity, and torque control mode (Touch probe and torque limit available)

	Index	Sub-Index	Size (bit)	Name	Shipment value
RxPDO (1603h)	6040h	00h	16	Controlword	60400010h
	6060h	00h	8	Modes of operation	60600008h
	6071h	00h	16	Target Torque	60710010h
	6072h	00h	16	Max torque	60720010h
	607Ah	00h	32	Target Position	607A0020h
	6080h	00h	32	Max motor speed	60800020h
	60B8h	00h	16	Touch probe function	60B80010h
	60FFh	00h	32	Target Velocity	60FF0020h
TxPDO (1A03h)	603Fh	00h	16	Error code	603F0010h
	6041h	00h	16	Statusword	60410010h
	6061h	00h	8	Modes of operation display	60610008h
	6064h	00h	32	Position actual value	60640020h
	606Ch	00h	32	Velocity actual value	606C0020h
	6077h	00h	16	Torque actual value	60770010h
	60B9h	00h	16	Touch probe status	60B90010h
	60BAh	00h	32	Touch probe pos1 pos value	60BA0020h
	60FDh	00h	32	Digital inputs	60FD0020h

5-4-4 PDO Mapping Setting Procedure

The procedure for setting the PDO mapping is explained using the case where 6081h-00h (Profile velocity) is added to 1600h (Receive PDO mapping 1) as an example.

Before change

Index	Set value	Object description	
1600h-01h	60400010h	6040h-00h	Controlword
1600h-02h	60600008h	6060h-00h	Modes of operation
1600h-03h	607A0020h	607Ah-00h	Target Position
1600h-04h	60B80010h	60B8h-00h	Touch probe function

After change

Index	Set value	Object description		
1600h-01h	60400010h	6040h-00h	Controlword	
1600h-02h	60600008h	6060h-00h	Modes of operation	
1600h-03h	607A0020h	607Ah-00h	Target Position	
1600h-04h	60B80010h	60B8h-00h	Touch probe function	
1600h-05h	60810020h	6081h-00h	Profile velocity	← Addition

<Setting method 1> In case of setting using SDO message

1) Transition the ESM status from Init to PreOP.
   It will be possible to transmit the SDO message using the Mailbox protocol.

2) Set the value of 1600h-00h to 0 with the SDO message.
   To change SubIndex = 01h or later, it is necessary to set it to 0 temporarily.

3) Set the value of 1600h-05h to 60810020h with the SDO message.
   The meaning of 60810020h of the set value is the following.

6	0	8	1	0	0	2	0	h
Index number				SubIndex number		Bit length		

4) Set the value of 1600h-00h to 5 with the SDO message.
   It means that the setting of 1600h is used until SubIndex = 05h.

5) Transition the ESM status from PreOP to SafeOP.
   TxPDO will be effective.

6) Transition the ESM status from SafeOP to OP.
   RxPDO will be effective.

* If the change description is written into EEPROM by setting the value of 1010-01h to 65766173h with the SDO message after the setting of 4), the setting of 2) to 4) will be unnecessary from the next activation. For the writing method of EEPROM, refer to Chapter 5-6.

<Setting method 2> In case of setting using object editor function of PANATERM

1) Transition the ESM status to Init to activate the object editor.
If setting an object from the object editor, it is necessary to set the ESM status to Init.

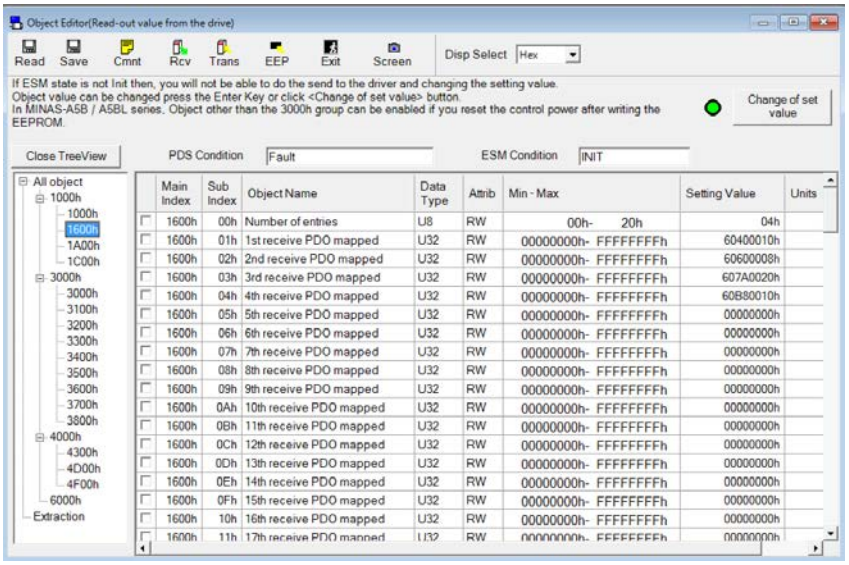

2) Set the value of 1600h-00h to 5 and click the “Change of set value” or press the Enter key.
3) Set the value of 1600h-05h to 60810020h and click the “Change of set value” or press the Enter key.
If setting it from the object editor, it is not necessary to set the value of 1600h-00h to 0 temporarily.
Also, even if the order of 2) and 3) is changed, there is no problem.

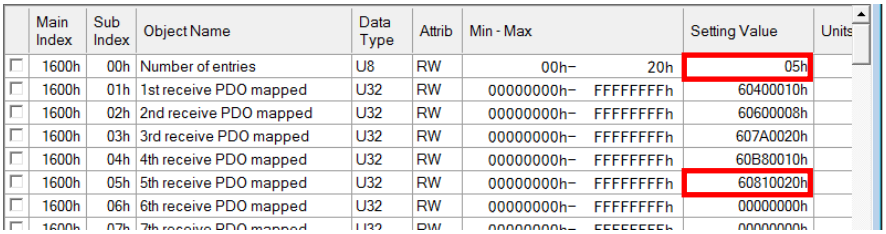

4) Transition the ESM status from init to PreOP.

5) Transition the ESM status from PreOP to SafeOP.
TxPDO will be effective.

6) Transition the ESM status from SafeOP to OP.
RxPDO will be effective.

* If setting value are store EEPROM by clicking "EEP" icon after method 2) and 3), method 2) and 3) are not required from the next startup.
When writing (editing) values from the object editor, in MINAS-A5B series, it was necessary to restart the driver after writing the EEPROM.
However, in MINAS-A6B series, it will be immediately reflected to actual object(for reflection to actual operation, please check the specification of each object).
Be careful as the behavior is different from MINAS-A5B.

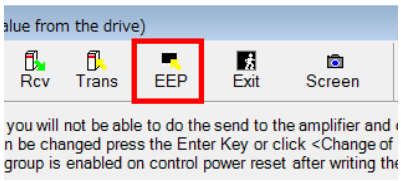

5-5 Sync Manager 2/3 Synchronization (1C32h, 1C33h)

Set Sync manager 2 with 1C32h (Sync manager 2 synchronization) and
Sync manager 3 with 1C33h (Sync manager 3 synchronization).

◆ Sync manager 2 synchronization

Index	Sub-Index	Name / Description	Units	Range	Data Type	Access	PDO	Op-mode	EEPROM
1C32h	-	Sync manager 2 synchronization Sync manager2 is set up.	-	-	-	-	-	-	-
	00h	Number of sub-objects Represents the number of sub-indexes for this object. The value is fixed at 20h.		0 - 255	U8	ro	No	ALL	No
	01h	Sync mode Set the synchronous mode of Sync Manager 2. 00h:Free Run (not synchronized) 01h:SM2 (synchronized with SM 2 Event) 02h:DC SYNC0 (synchronized with Sync0 Event) 03h:Not supported (Can not be set) − In accordance with the combination with the setting of ESC register 0981h (DC-Activation) (following table), set the set value of this object to the transition time from PreOP to SafeOP automatically.	-	0 - 65535	U16	rw	No	ALL	Yes
	02h	Cycle time Sets the cycle of Sync Manager. Set 125000 (125 µs), 250000 (250 µs), 500000 (500 µs), 1000000 (1 ms), 2000000 (2 ms), or 4000000 (4 ms). Setting other values causes Err81.0 (Synchronization cycle error protection).	ns	0 - 4294967295	U32	rw	No	ALL	Yes
	03h	Shift time Not supported	ns	0 - 4294967295	U32	ro	No	ALL	No
	04h	Sync modes supported Sets the synchronous type to be supported. bit 0: Free Run mode support 0: Not supported, 1: FreeRun mode support This servo driver will be set to 1 bit 1: SM synchronous mode support 0: Not supported, 1: SM2 event synchronous support This servo driver will be set to 1 bit 4-2: DC synchronous type support 000b: Not supported 001b: DC Sync 0 event support This servo driver will be set to 001b bit 6-5: Output shift support 00b: Not supported 01b: Shift support for a local timer This servo driver will be set to 00b bit 15-7:Reserved	-	0 - 65535	U16	ro	No	ALL	No

ESC register 0981h set status	1C32h-01h set value		Value of 1C32h-01h changed at time of transition from PreOP to SafeOP
DC enable ON	00h：FreeRun	⇒	02h：DC SYNC0
	01h：SM2		02h：DC SYNC0
	02h：DC SYNC0		02h：DC SYNC0
DC enable OFF	00h：FreeRun		00h：FreeRun
	01h：SM2		01h：SM2
	02h：DC SYNC0		00h：FreeRun

Sync mode (1C32h-01h)	Function
00h (FreeRun)	Set an event interval with a local timer.
01h (Synchronous with SM2)	Set the minimum interval of the SM2 event.
02h (DC SYNC0)	Set Sync0 Cycle Time (ESC register: 0x9A0h).

Index	Sub-Index	Name / Description	Units	Range	Data Type	Access	PDO	Op-mode	EEPROM
1C32h	05h	Minimum cycle time	ns	0 - 4294967295	U32	ro	No	ALL	No
		This is the minimum value of the configurable communication cycle. It is 125000 for this servo driver. *1） Set 125000 (1250µs), 250000 (250 µs), 500000 (500 µs), 1000000 (1 ms), 2000000 (2 ms), or 4000000 (4 ms) to 1C32h-02h. Setting other values causes Err81.0 (Synchronization cycle error protection). (※) As for MINAS-A5B series, this object is the minimal value from the SM2 event or SYNC0 event to completion of writing or reading out to ESC. In this case, it is 45000 for this servo driver. *1)							
	06h	Calc and copy time	ns	0 - 4294967295	U32	ro	No	ALL	No
		Time from the SM2 event or SYNC0 event to completion of reading out to the ESC. This time may become longer if signals vary. It is 25000 for this servo driver. *1) (※) As for MINAS-A5B series, this object is the time from the SM2 event or SYNC0 event to completion of generation of PWM signal. In this case, it is 220000 for this servo driver. *1)							
	08h	Command	-	0 - 65535	U16	ro	No	ALL	No
		Not supported							
	09h	Delay Time	ns	0 - 4294967295	U32	ro	No	ALL	No
		Time from the PWM command output to the turning ON/OFF of power transistor output. It is 0 for this servo driver. *1)							
	0Ah	Sync0 cycle time	ns	0 - 4294967295	U32	ro	No	ALL	No
		In the case of DC SYNC0 (1C32h-01h=02h), the value 09A0h is set to the ESC register. In other cases, 0 is set.							
	0Bh	Cycle time too small	-	0 - 65535	U16	ro	No	ALL	No
		Not supported							
	0Ch	SM-event missed	-	0 - 65535	U16	ro	No	ALL	No
		Not supported							
	0Dh	Shift time too short	-	0 - 65535	U16	ro	No	ALL	No
		Not supported							
	0Eh	RxPDO toggle failed	-	0 - 65535	U16	ro	No	ALL	No
		Not supported							
	20h	Sync error	-	0 - 1	BOOL	ro	No	ALL	No
		Not supported							

*1) These setting values are only for reference and do not guarantee their descriptions.

◆ Sync manager 3 synchronization

Index	Sub-Index	Name / Description	Units	Range	Data Type	Access	PDO	Op-mode	EEPROM
1C33h	-	Sync manager3 synchronization Sync manager3 is set up.	-	-	-	-	-	-	-
	00h	Number of sub-objects Represents the number of sub-indexes for this object. The value is fixed at 20h.	-	0 - 255	U8	ro	No	ALL	No
	01h	Sync mode Set the synchronous mode of Sync Manager 3. 00h: Free Run (not synchronized) 01h: Not supported (Can not be set) 02h: DC SYNC0 (synchronized with Sync0 Event) 03h:Not supported (Can not be set) 22h: SM2 (Synchronous with SM2 Event) − In accordance with the combination with the setting of ESC register 0981h (DC-Activation) (following table), set the set value of this object to the transition time from PreOP to SafeOP automatically.	-	0 - 65535	U16	rw	No	ALL	Yes
	02h	Cycle time Sets the cycle of Sync Manager. The same value is set as 1C32h:02h.	ns	0 - 4294967295	U32	ro	No	ALL	No
	03h	Shift time Set the time from the Sync0 and SM2 events until slave CPU write value of the RxPDO to ESC. Set the value in steps of 125000 and value under Cycle time. Normally, set 0.	ns	0 - 4294967295	U32	rw	No	ALL	No
	04h	Sync modes supported Sets the synchronous type to be supported. bit 0: Free Run mode support 0: Not supported, 1: Free run mode support This servo driver will be set to 1 bit 1: SM synchronous mode support 0: Not supported, 1: SM2 event synchronous support This servo driver will be set to 1 bit 4-2: DC synchronous type support 000b: Not supported 001b: DC Sync0 event support This servo driver will be set to 001b bit 6-5: Input shift support 00b: Not supported 01b: Shift support for a local timer This servo driver will be set to 01b bit 15-7: Reserved	-	0 - 65535	U16	ro	No	ALL	No

ESC register 0981h set status	1C33h-02h set value		Value of 1C33h-02h changed at time of transition from PreOP to SafeOP
DC enable ON	00h：FreeRun	⇒	02h：DC SYNC0
	22h：SM2		02h：DC SYNC0
	02h：DC SYNC0		02h：DC SYNC0
DC enable OFF	00h：FreeRun		00h：FreeRun
	22h：SM2		22h：SM2
	02h：DC SYNC0		00h：FreeRun

Index	Sub-Index	Name / Description	Units	Range	Data Type	Access	PDO	Op-mode	EEPROM
1C33h	05h	Minimum cycle time	ns	0 - 4294967295	U32	ro	No	ALL	No
		This is the minimum value of the configurable communication cycle. The same value as 1C32h:05h. (※) As for MINAS-A5B series, this object is the minimal value from the SM2 event or SYNC0 event to completion of writing or reading out to ESC.							
	06h	Calc and copy time	ns	0 - 4294967295	U32	ro	No	ALL	No
		This is the time from the SM2 event or SYNC0 event to completion of writing into the ESC register. It is 45000 for this servo driver. *1) (※) As for MINAS-A5B series, this object is the time from the data latching in the encoder to the writing of communication data in the ESC register. In this case, it is 220000 for this servo driver. *1)							
	08h	Command	-	0 - 65535	U16	ro	No	ALL	No
		Not supported							
	09h	Delay time	ns	0 - 4294967295	U32	ro	No	ALL	No
		Time from the PWM command output to the turning ON/OFF of power transistor output. The same value as 1C32h:09h.							
	0Ah	Sync0 cycle time	ns	0 - 4294967295	U32	ro	No	ALL	No
		The same value as 1C32h-0Ah.							
	0Bh	Cycle time too small	-	0 - 65535	U16	ro	No	ALL	No
		Not supported							
	0Ch	SM-event missed	-	0 - 65535	U16	ro	No	ALL	No
		Not supported							
	0Dh	Shift time too short	-	0 - 65535	U16	ro	No	ALL	No
		Not supported							
	0Eh	RxPDO toggle failed	-	0 - 65535	U16	ro	No	ALL	No
		Not supported							
	20h	Sync error	-	0 - 1	BOOL	ro	No	ALL	No
		Not supported							

*1) These setting values are only for reference and do not guarantee their descriptions.

5-5-1 DC (synchronous with SYNC0 event)

Synchronization method	Characteristic
Synchronize the time information of other slaves based on the time of the first slave.	•High accuracy •Correction process is required on the master side.

This section describes the DC synchronous mode specification for this servo driver.

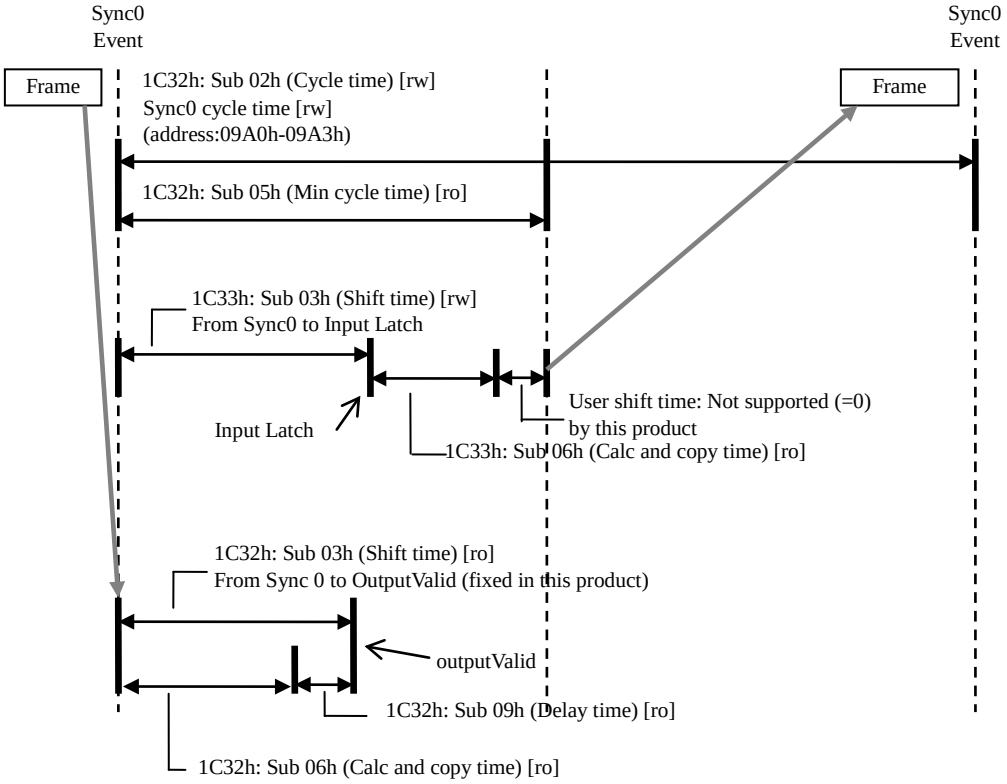

Synchronization setting for Sync manager 2/3 during the DC synchronous mode

Index	Sub-Index	Access	Name	Value
1C32h	00h	ro	Number of sub-objects	20h
	01h	rw	Sync mode	02h:DC SYNC0 (synchronized with Sync0 Event)
	02h	rw	Cycle time	125 µs: 125000 250 µs: 250000 500 µs: 500000 1 ms: 1000000 2ms:2000000 4ms:4000000
	03h	ro	Shift time	Not supported
	04h	ro	Sync modes supported	bit 4-2: DC synchronous type support 001b: DC Sync 0 event support
	05h	ro	Minimum cycle time	125000 *1)
	06h	ro	Calc and copy time	25000 *1)
	09h	ro	Delay time	0 *1)
	0Ah	ro	Sync0 cycle time	Value of ESC register 09A0h
	0Bh	ro	Cycle time too small	Not supported
	0Ch	ro	SM-event missed	Not supported
	0Dh	ro	Shift time too short	Not supported
	20h	ro	Sync error	Not supported

*1) These setting values are only for reference and do not guarantee their descriptions.

Index	Sub-Index	Access	Name	Value
1C33h	00h	ro	Number of sub-objects	Same setting as 1C32h:00h.
	01h	rw	Sync mode	02h:DC SYNC0 (synchronized with Sync0 Event)
	02h	ro	Cycle time	Same setting as 1C32h:02h.
	03h	rw	Shift time	0 ns to 3875000 ns (Set the writing timing of the TxPDO value from slave CPU to ESC in steps of 125000ns.)
	04h	ro	Sync modes supported	27h *See Chapter 5-5 for setting contents.
	05h	ro	Minimum cycle time	Same setting as 1C32h:05h.
	06h	ro	Calc And copy time	45000 *1)
	09h	ro	Delay time	Same setting as 1C32h:09h.
	0Ah	ro	Sync0 cycle time	Same setting as 1C32h:0Ah
	0Bh	ro	Cycle time too small	Not supported
	0Ch	ro	SM-event missed	Not supported
	0Dh	ro	Shift time too short	Not supported
	20h	ro	Sync error	Not supported

*1) These setting values are only for reference and do not guarantee their descriptions.

5-5-2 SM2 (synchronous with SM2 event)

Synchronization method	Characteristic
Synchronize it to the reception timing of RxPDO.	•There is no transmission delay correction and accuracy is low. •It is necessary to keep the transmission timing constant on the master side. (dedicated hardware etc.)

This section describes the SM2 mode specification for this driver.

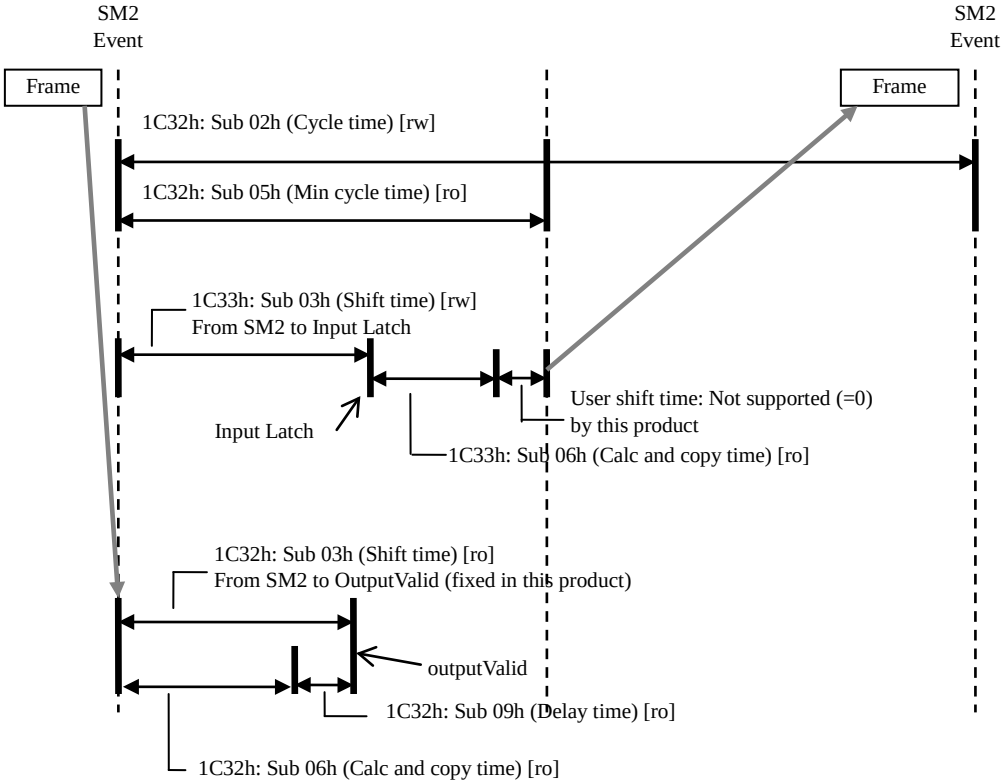

Synchronization setting for Sync manager 2/3 during the SM2 event synchronous mode

Index	Sub-Index	Access	Name / Description	Value
1C32h	00h	ro	Number of sub-objects	20h (fixed)
	01h	rw	Sync mode	01h:SM2 (synchronized with SM2 Event)
	02h	rw	Cycle time	125 µs:125000 250 µs: 250000 500 µs: 500000 1 ms: 1000000 2ms:2000000 4ms:4000000
	03h	ro	Shift time	Not supported
	04h	ro	Sync modes supported	bit 1: SM synchronous mode support 1: SM2 event synchronization support
	05h	ro	Minimum cycle time	125000 *1)
	06h	ro	Calc And copy time	25000 *1)
	09h	ro	Delay time	0 *1)
	0Ah	ro	Sync0 cycle time	0
	0Bh	ro	Cycle time too small	Not supported
	0Ch	ro	SM-event missed	Not supported
	0Dh	ro	Shift time too short	Not supported
	20h	ro	Sync error	Not supported

*1) These setting values are only for reference and do not guarantee their descriptions.

Index	Sub-Index	Access	Name / Description	Value
1C33h	00h	ro	Number of sub-objects	Same setting as 1C32h:00h.
	01h	rw	Sync mode	22h: SM2 (Synchronous with SM2 Event)
	02h	ro	Cycle time	Same setting as 1C32h:02h.
	03h	rw	Shift time	0 ns to 3875000 ns (Set the writing timing of the TxPDO value from slave CPU to ESC in steps of 125000.)
	04h	ro	Sync modes supported	27h *See Chapter 5-5 for setting contents.
	05h	ro	Minimum cycle time	Same setting as 1C32h:05h.
	06h	ro	Calc and copy time	45000 *1)
	09h	ro	Delay time	Same setting as 1C32h:09h.
	0Ah	ro	Sync0 cycle time	Same setting as 1C32h:0Ah.
	0Bh	ro	Cycle time too small	Not supported
	0Ch	ro	SM-event missed	Not supported
	0Dh	ro	Shift time too short	Not supported
	20h	ro	Sync error	Not supported

*1) These setting values are only for reference and do not guarantee their descriptions.

5-5-3 Free RUN (asynchronous)

Synchronization method	Characteristic
Asynchronous	•Process is simple. •Real-time characteristics are insufficient.

This section describes the Free Run mode specification for this driver.

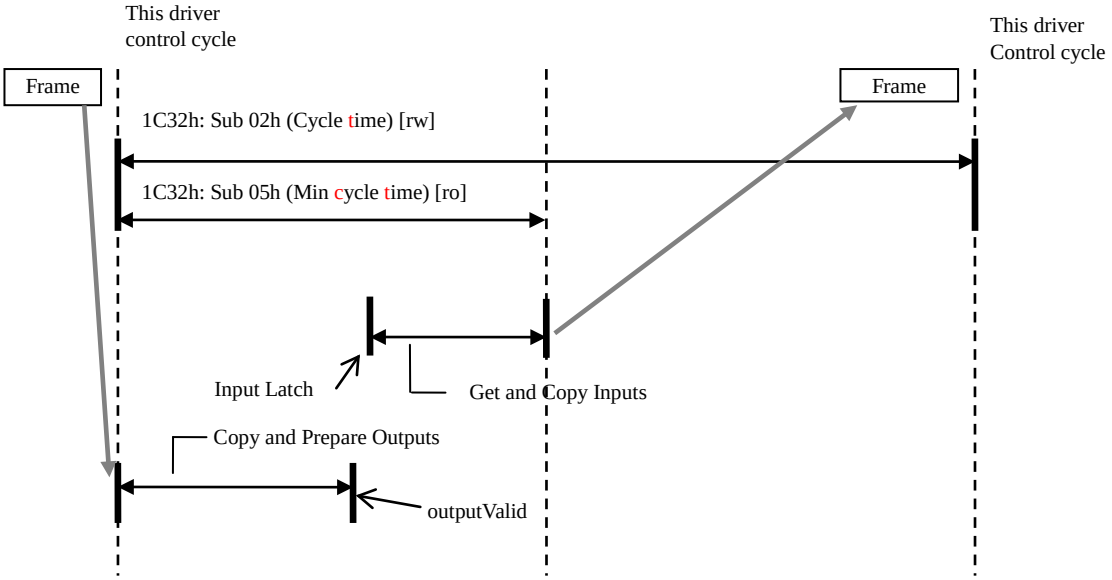

Synchronization setting for Sync manager 2/3 during the Free Run mode

Index	Sub-Index	Access	Name	Value
1C32h	00h	ro	Number of sub-objects	20h (fixed)
	01h	rw	Sync mode	00h:Free Run (not synchronized)
	02h	rw	Cycle time	125 µs: 125000 250 µs: 250000 500 µs: 500000 1 ms: 1000000 2ms:2000000 4ms:4000000
	03h	ro	Shift time	Not supported
	04h	ro	Sync modes supported	bit 0: Free Run mode support 1: Free Run mode support
	05h	ro	Minimum cycle time	125000 *1)
	06h	ro	Calc and copy time	Not supported
	09h	ro	Delay time	Not supported
	0Ah	ro	Sync0 cycle time	0
	0Bh	ro	Cycle time too small	Not supported
	0Ch	ro	SM-event missed	Not supported
	0Dh	ro	Shift time too short	Not supported
	20h	ro	Sync error	Not supported

*1) These setting values are only for reference and do not guarantee their descriptions.

Index	Sub-Index	Access	Name	Value
1C33h	00h	ro	Number of sub-objects	Same setting as 1C32h:00h.
	01h	rw	Sync mode	00h: FreeRun (not synchronized)
	02h	ro	Cycle time	Same setting as 1C32h:02h.
	03h	rw	Shift time	Not supported
	04h	ro	Sync modes supported	27h *See Chapter 5-5 for setting contents.
	05h	ro	Minimum cycle time	Same setting as 1C32h:05h.
	06h	ro	Calc and copy time	Same setting as 1C32h:06h.
	09h	ro	Delay time	Same setting as 1C32h:09h.
	0Ah	ro	Sync0 cycle time	Same setting as 1C32h:0Ah.
	0Bh	ro	Cycle time too small	Not supported
	0Ch	ro	SM-event missed	Not supported
	0Dh	ro	Shift time too short	Not supported
	20h	ro	Sync error	Not supported

*1) These setting values are only for reference and do not guarantee their descriptions.

5-5-4 Input shift time

To provide the newest slave information to the master, it is supported for the input shift time.
By setting 1C33h-03h (Shift time), it is possible to adjust the timing of Input Latch with accuracy of 125 μs and set it to a value most immediately before the TxPDO frame transmission.
In particular, it is effective for the case where the communication cycle (cycle time) is extended.

<DC Cycle Time = 500μs、Input shift time = 0μs>

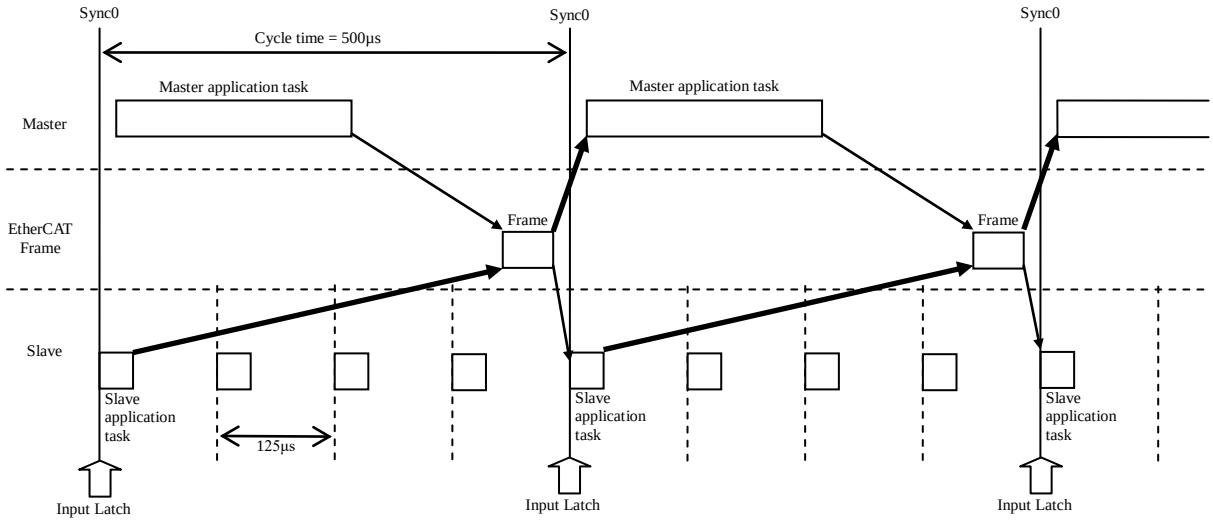

<DC Cycle Time = 500μs、Input shift time = 375μs>

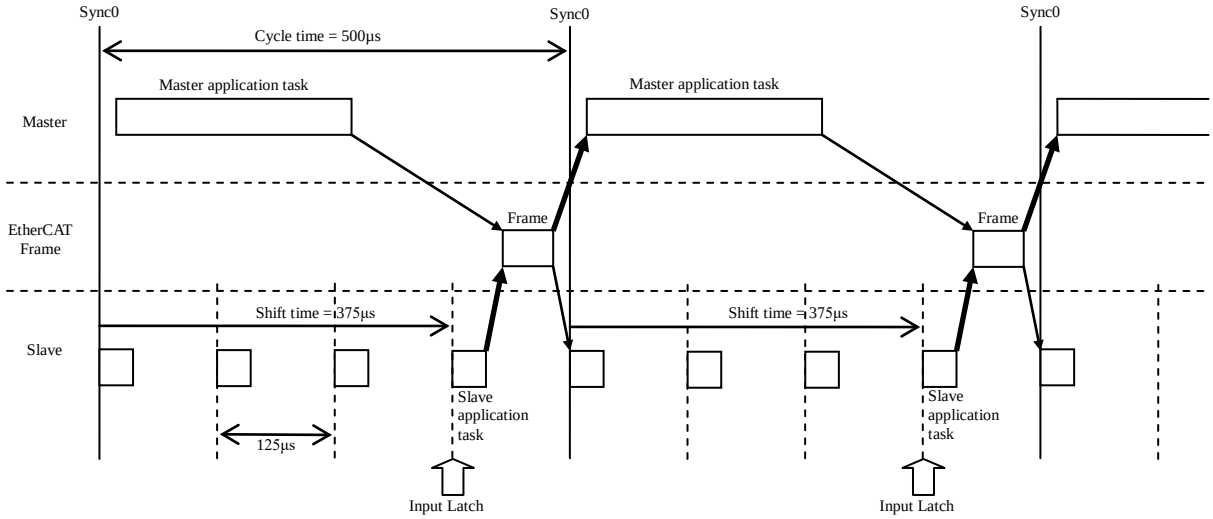

5-6 Store Parameters (write object in EEPROM) (1010h)

Send 65766173h(“save”) to a slave with the EtherCAT communication data by using the object 1010h-01h (Save all parameters) to batch write (back up) different object data in EEPROM and RAM into EEPROM.

Index	Sub-Index	Name / Description	Units	Range	Data Type	Access	PDO	Op-mode	EEPROM
1010h	-	Store parameters	-	-	-	-	-	-	-
		Writes (backs up) the object data into EEPROM. Only the objects whose EEPROM field in the object list are "Yes" are backed up.							
	00h	Number of entries	-	0 - 255	U8	ro	No	ALL	No
		Represents the number of sub-indexes for this object. The value is fixed at 1.							
	01h	Save all parameters	-	0 - 4294967295	U32	rw	No	ALL	No
		Write 65766173h(“save”) into the EtherCAT communication data to batch back up the whole target objects into EEPROM. When the process is completed, it will be 00000001h regardless of pass or fail. Read-out after control power-on is 00000001h.							

- Only the objects whose EEPROM field in the object list is "Yes" are backed up.

Index	Sub-Index	Name	Units	Range	Data Type	Access	PDO	Op-mode	EEPROM
607Dh	-	Software position limit	-	-	-	-	-	pp ip	-
	00h	Number of entries	-	2	U8	ro	No		No
	01h	Min position limit	command	-2147483648 – 2147483647	I32	rw	RxPDO		Yes

*This table is a thing for explanation.
Please understand that it differs from an actual object list.

Objects whose value of this field is "Yes" are backed up.

- When “Control power undervoltage protection” (Err.11.0) occurs, EEPROM cannot be accessed and the objects cannot be saved in EEPROM.

- In writing into EEPROM, about 10 seconds maximum. (when changing all objects)
  Do not shut off control power while writing to EEPROM.

- The objects of the attributes C and R in the servo parameter area (object 3xxxh) will be effective after resetting the control power.
  For information to attributes of servo parameter, refer to Basic function specifications of the Technical document(SX-DSV03241).

- The writing count into EEPROM is limited.

- During writing into EEPROM, other SDO commands are not received.

- In cases below, an abort message is returned:
  Write access to 1010h-00h
  The data written to 1010h-01h is other than 65766173h(“save”)
  For other abort messages, refer to Section 3-6-1.

5-7 Diagnosis history (Reading Function of Error (alarm) History) (10F3h)

Use the object 10F3h (Diagnosis history) to read up to 14 error (alarm) histories.

The error (alarm) histories are stored up to 14 limit. They are placed from 10F3h-06h (Diagnosis message 1) to 103Fh-13h (Diagnosis message 14) one by one in the order of occurrence.

The subindex number in which the latest error (alarm) history was stored can be checked in 103Fh-02h (Newest Message).

10F3h(Diagnosis history) does not support PDO.
Since each value is read from SDO communication, simultaneity can not be guaranteed.

At the time of control power on, the error (alarm) history at 10F3h (Diagnosis history) is set by reading the information backed up at EEPROM of this servo driver.

The error(alarm) history displayed by 10F3h (Diagnosis history) serves as only alarm generated with this servo driver.
Therefore, warning is not displayed.

There is alarm which is not stored and displayed by 10F3h (Diagnosis history).
Please refer to "7-1. List of protective function" of Functional Specification (SX-DSV03241) for details.

< In the case of for 5 alarm histories. >

10F3h-	
02h	0Ah
06h	Alarm information of 5 times ago.
07h	Alarm information of 4 times ago.
08h	Alarm information of 3 times ago.
09h	Alarm information of 2 times ago.
0Ah	Alarm information of 1 times ago.(newest)
0Bh	0
0Ch	0
0Dh	0
0Eh	0
0Fh	0
10h	0
11h	0
12h	0
13h	0

< In the case of for 14 alarm histories. >

10F3h-	
02h	13h
06h	Alarm information of 14 times ago.
07h	Alarm information of 13 times ago.
08h	Alarm information of 12 times ago.
09h	Alarm information of 11 times ago.
0Ah	Alarm information of 10 times ago.
0Bh	Alarm information of 9 times ago.
0Ch	Alarm information of 8 times ago.
0Dh	Alarm information of 7 times ago.
0Eh	Alarm information of 6 times ago.
0Fh	Alarm information of 5 times ago.
10h	Alarm information of 4 times ago.
11h	Alarm information of 3 times ago.
12h	Alarm information of 2 times ago.
13h	Alarm information of 1 times ago.(newest)

Index	Sub-Index	Name / Description	Units	Range	Data Type	Access	PDO	Op-mode	EEPROM
10F3h	-	Diagnosis history Reads an error history and enables/disables an emergency message.	-	-	-	-	-	-	-
	00h	Number of entries Represents the number of sub-indexes for this object. The value is fixed at 13h.	-	0 - 255	U8	ro	No	ALL	No
	01h	Maximum messages - Represents the number of error messages which this servo driver is possible to store. The value is fixed at 0Eh. (14times)	-	0 - 255	U8	ro	No	ALL	No
	02h	Newest message - Displays the sub-index where the latest error message is stored. - Indicates 0 when there is no alarm history such as immediately after the alarm history is cleared.	-	0 - 255	U8	ro	No	ALL	No
	03h	Newest acknowledged message Read : always 0 Write : writing of 00h : All the Diagnosis Message clearances writing of other than 00h : Output of SDO Abort (Code 0x06090030)	-	0 - 255	U8	rw	No	ALL	No
	04h	New messages available It does not support with this servo driver. The value is fixed at 0.	-	0 - 1	BOOL	ro	No	ALL	No
	05h	Flags	-	0 - 65535	U16	See below	No	ALL	Yes

bit 0	RW	Emergency messages execution permission 0 : Emergency message Invalid 1 : Whenever new abnormality is detected, emergency message is issued. (Some of the anomaly does not remain in the Diagnosis message) For the detail of the emergency message, refer to Section 3-6-1.
bit 1	R	Not supported : Fixed at 1
bit 2	R	Not supported : Fixed at 1
bit 3	R	Not supported : Fixed at 0
bit 4	R	Not supported : Fixed at 0
bit 5	R	Diagnosis message clearances information 0 : There is error history information 1 : No error history information or Clearing of error history information(when writing 0 to 10F3h-03h) is completed. (It will hold until the next abnormality(alarm) occurs.)
bit 6-15	-	Reserved

Index	Sub-Index	Name / Description	Units	Range	Data Type	Access	PDO	Op-mode	EEPROM
	06h	Diagnosis message 1	-	-	OS	ro	No	ALL	No (*1)

An error history is displayed.

Example:	00	E8	10	FF	02	00	00	00	00	00	00	00	00	00	00	00
Application	(L)	(H)	(L)	(H)	(L)	(H)	(L)	(H)	(L)							(H)
	(Fixed value)		Error code		(Fixed value)		Text ID		(Fixed value)							
	Diag code				Flags		Text ID		Time stamp							

Diag code … Diagnostic code which identifies a message
The value of 603Fh returns to Error code.
Flags … The value is fixed at 00002h.
Text ID …Text ID is defined for each error messages(Error code).
Main alarm number is set as upper 8 bits, and a sub alarm number is set as lower 8 bits.
Time stamp …Time when abnormalities were notified
Not supported : The value is fixed at 0000000000000000h.

Index	Sub-Index	Name / Description	Units	Range	Data Type	Access	PDO	Op-mode	EEPROM
	:	:							
	13h	Diagnosis message 14 An error history is displayed. The content is same as the sub-index 06h.	-	-	OS	ro	No	ALL	No (*1)

(*1) Although not backed up as an object, it is transmitted from the alarm information backed up separately.

6 Drive Profile Area (6000h to 6FFFh)

6-1 Object List

Index	Sub-Index	Name
6007h	00h	Abort connection option code
603Fh	00h	Error code
6040h	00h	Controlword
6041h	00h	Statusword
605Ah	00h	Quick stop option code
605Bh	00h	Shutdown option code
605Ch	00h	Disable operation option code
605Dh	00h	Halt option code
605Eh	00h	Fault reaction option code
6060h	00h	Modes of operation
6061h	00h	Modes of operation display
6062h	00h	Position demand value
6063h	00h	Position actual internal value
6064h	00h	Position actual value
6065h	00h	Following error window
6066h	00h	Following error time out
6067h	00h	Position window
6068h	00h	Position window time
6069h	00h	Velocity sensor actual value
606Ah	00h	Sensor selection code
606Bh	00h	Velocity demand value
606Ch	00h	Velocity actual value
606Dh	00h	Velocity window
606Eh	00h	Velocity window time
606Fh	00h	Velocity threshold
6070h	00h	Velocity threshold time
6071h	00h	Target torque
6072h	00h	Max torque
6073h	00h	Max current
6074h	00h	Torque demand
6075h	00h	Motor rated current
6076h	00h	Motor rated torque
6077h	00h	Torque actual value
6078h	00h	Current actual value
6079h	00h	DC link circuit voltage
607Ah	00h	Target position
607Bh	-	Position range limit
	00h	Highest sub-index supported
	01h	Min position range limit
	02h	Max position range limit
607Ch	00h	Home offset
607Dh	-	Software position limit
	00h	Number of entries
	01h	Min position limit
	02h	Max position limit
607Eh	00h	Polarity
607Fh	00h	Max profile velocity
6080h	00h	Max motor speed
6081h	00h	Profile velocity
6082h	00h	End velocity
6083h	00h	Profile acceleration
6084h	00h	Profile deceleration

Index	Sub-Index	Name
6085h	00h	Quick stop deceleration
6086h	00h	Motion profile type
6087h	00h	Torque slope
6088h	00h	Torque profile type
608Fh	-	Position encoder resolution
	00h	Highest sub-index supported
	01h	Encoder increments
	02h	Motor revolutions
6091h	-	Gear ratio
	00h	Number of entries
	01h	Motor revolutions
	02h	Shaft revolutions
6092h	-	Feed constant
	00h	Highest sub-index supported
	01h	Feed
	02h	Shaft revolutions
6098h	00h	Homing method
6099h	-	Homing speeds
	00h	Number of entries
	01h	Speed during search for switch
	02h	Speed during search for zero
609Ah	00h	Homing acceleration
60A3h	00h	Profile jerk use
60A4h	-	Profile jerk
	00h	Highest sub-index supported
	01h	Profile jerk1
	02h	Profile jerk2
60B0h	00h	Position offset
60B1h	00h	Velocity offset
60B2h	00h	Torque offset
60B8h	00h	Touch probe function
60B9h	00h	Touch probe status
60BAh	00h	Touch probe pos1 pos value
60BBh	00h	Touch probe pos1 neg value
60BCh	00h	Touch probe pos2 pos value
60BDh	00h	Touch probe pos2 neg value
60C2h	-	Interpolation time period
	00h	Highest sub-index supported
	01h	Interpolation time period value
	02h	Interpolation time index
60C5h	00h	Max acceleration
60C6h	00h	Max deceleration
60E3h	-	Supported homing method
	00h	Number of entries
	01h	1st supported homing method
	to	-
	20h	32nd supported homing method
60F2h	00h	Positioning option code
60F4h	00h	Following error actual value
60FAh	00h	Control effort
60FCh	00h	Position demand internal value
60FDh	00h	Digital inputs

Index	Sub-Index	Name
60FEh	-	Digital outputs
	00h	Number of entries
	01h	Physical outputs
	02h	Bit mask
60FFh	00h	Target velocity
6502h	00h	Supported drive modes

6-2 PDS (Power Drive Systems) Specification

6-2-1 Finite State Automaton (FSA)

The figure below defines state transition(FSA) of PDS related to the power control triggered by the user command or error detection etc..(After that, describe “PDS state” in this document.)

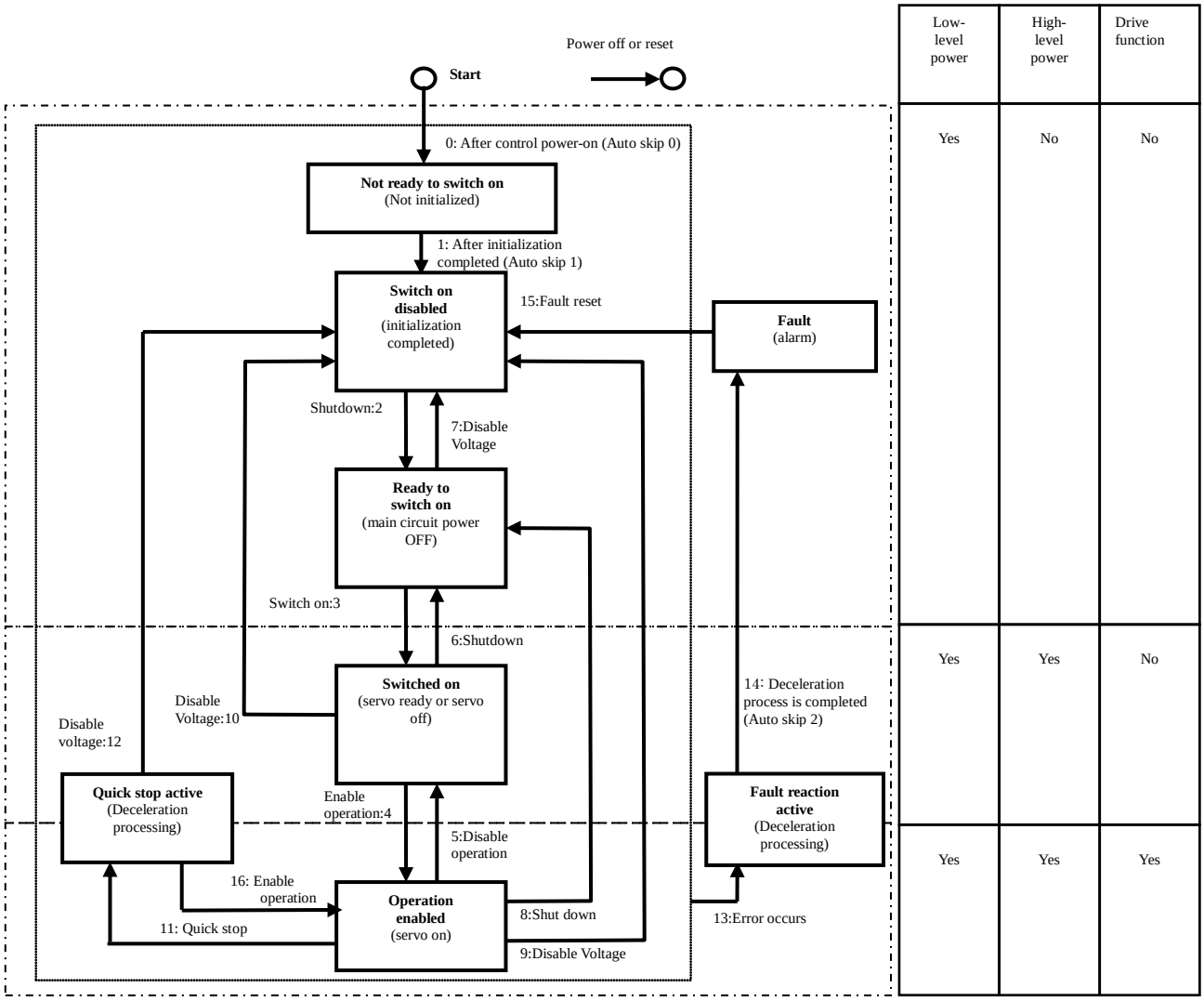

Low-level power: control power supply
High-level power: main power supply
Drive function: servo-on

- The conditions of a servo ready state are that High-level power(main power supply) is in the state of ON. When High-level power (main power supply) is in the state of OFF, it does not become servo ready and can not transition to the state Switched on.

- During STO state, PDS state becomes Switch on disabled regardless of the state of High-level power (main power supply).
  For how to return from STO state, refer to the technical document, basic function specifications (SX-DSV03241), section 8-3-2.

- After transition to Operation enabled(servo on), perform an operation command after time for 100ms or more.

PDS state transition events(transition condition) and actions are listed in the table below.
PDS transition must be performed while handshaking with transition status.
(Next transition command must be sent after checking at 6041h:statusword that transition has completed.)

PDS Transition		Event(s)	Action(s)
0	Auto skip 0	- Automatically changes after control power-on or after resetting application	- The drive functions are self-diagnosed and initialized.
1	Auto skip 1	- Automatic transition after the completion of initialization.	- The communication is established.
2	Shutdown	- Not in STO state, the Shutdown command is received	- Nothing in particular
3	Switch on	- In the state of ON of High-level power, The Switch-on command is received	- Nothing in particular
4	Enable operation	- The Enable operation command is received	- The drive functions are validated. Also, all the set point data is cleared.
5	Disable operation	- The Disable operation command is received	- The drive functions are disabled.
6	Shutdown	- In the state of ON of High-level power, the Shutdown command is received - When High-level power detects the state of OFF.	- Nothing in particular
7	Disable voltage	- The Disable voltage command is received. - The Quick stop command is received. - The state transitions to Init when the ESM state is PreOP, SafeOP, or OP - It becomes STO state.	- Nothing in particular
8	Shutdown	- In the state of ON of High-level power, The Shutdown command is received	- The drive functions are disabled.
9	Disable voltage	- The Disable voltage command is received - The OFF state of High-level power is detected when the value of Abort connection option code is 2 - It becomes STO state.	- The drive functions are disabled.
10	Disable voltage	- The Disable voltage command is received. - The Quick stop command is received. - The state transitions to Init when the ESM state is PreOP, SafeOP, or OP - It becomes STO state.	- Nothing in particular
11	Quick stop	- The Quick stop command is received - The OFF state of High-level power is detected when the value of Abort connection option code is 3	- The Quick stop function starts.
12	Disable voltage	- Quick stop function is completed and quick stop option code is 1, 2 or 3. - After Quick stop function is completed, received Disable voltage command quick stop option code is 5, 6, or 7. - High-level power OFF is detected. - It becomes STO state.	- The drive functions are disabled.
13	Error occurs	- An error is detected - The OFF state of High-level power is detected when the value of Abort connection option code is 1 - A trigger for retracting operation activation is detected *1)	- Performs the established Fault reaction function. - Performs the retracting operation function. *1)
14	Auto skip 2	- After completing the deceleration process due to an error detection, the state transitions automatically - After completing or suspending the retracting operation, the state transitions automatically.*1)	- The drive functions are disabled.
15	Fault reset	- After releasing factor error, The Fault reset command is received	- Resets the Fault state when there is no Fault factor.
16	Enable operation	- When the Quick stop option code is 5, 6, or 7, the Enable operation command is received	- The drive functions are validated.

*1) The first edition of the software version (Ver1.01) does not support it.

6-3 Controlword (6040h)

Use the object 6040h (Control word) to set the commands to control a slave (servo driver) including the PDS state transition.

(SAFTY PRECAUTIONS)
When using this object, be sure to use the PDO and enable the PDO watchdog.
SDO cannot judge communication cut-off, therefore an electricity state of the motor might be continued and becomes non-safe..

Index	Sub-Index	Name / Description	Units	Range	Data Type	Access	PDO	Op-mode	EEPROM
6040h	00h	Controlword	-	0 - 65535	U16	rw	RxPDO	ALL	No

• Set a command to a servo driver including the PDS state transition.

bit information details

15	14	13	12	11	10	9	8	7	6	5	4	3	2	1	0
r						oms	h	fr	oms			eo	qs	ev	so

r = reserved (not supported)
oms = operation mode specific (operation mode dependent bit)
h = halt
fr = fault reset
eo = enable operation
qs = quick stop
ev = enable voltage
so = switch on

bit7,3-0 (fault reset / enable operation / quick stop / enable voltage / switch on):
Indicates the PDS command. Here, describes the combination of bits corresponding to the command:

-: Indefinite

Command	Bits of the controlword					PDS Transitions
	bit 7	bit 3	bit 2	bit 1	bit 0	
	fault reset	enable operation	quick stop	enable voltage	switch on	
Shutdown	0	-	1	1	0	2,6,8
Switch on	0	0	1	1	1	3
Switch on + Enable operation	0	1	1	1	1	3+4 (*1)
Enable operation	0	1	1	1	1	4, 16
Disable voltage	0	-	-	0	-	7, 9, 10, 12
Quick stop	0	-	0 (*2)	1	-	7,10, 11
Disable operation	0	0	1	1	1	5
Fault reset	↑	-	-	-	-	15

(*1) Automatic transition to Enable operation state after executing “switch on” state functionality.
(*2) "Quick stop" command is enabled if the bit is '0'.
Please keep in mind that the bit performs reverse operation compared to other bits.

bit8(halt):
If 1, the motor is decelerated and stopped temporarily according to 605Dh (Halt option code).
After the motor stops, restoring the bit to 0 resumes the operation.
In the hm control mode, however, operation is not restarted even if the bit is restored to 0 after the stop by 1.

bit9,6-4 (operation mode specific):

Below table shows the behavior of the operation mode(Op-mode) specific bits.
(For details, refer to the relevant object's section of each operation mode.)

-: not used(Set to 0)

Op-mode	bit9	bit6	bit5	bit4
pp	change on set-point	absolute / relative	change set immediately	new set-point
pv	-	-	-	-
tq	-	-	-	-
hm	-	-	-	start homing
ip	-	-	-	enable interpolation
csp	-	-	-	-
csv	-	-	-	-
cst	-	-	-	-

6-4 Statusword (6041h)

Use the object 6041h (Status word) to check a slave (servo driver) state.

Index	Sub-Index	Name / Description	Units	Range	Data Type	Access	PDO	Op-mode	EEPROM
6041h	00h	Statusword	-	0 - 65535	U16	ro	TxPDO	ALL	No

• Displays the servo driver state.

bit information details

15	14	13	12	11	10	9	8	7	6	5	4	3	2	1	0
r		oms		ila	oms	rm	r	w	sod	qs	ve	f	oe	so	rtso

r = reserved (not supported)
oms = operation mode specific (operation mode dependent bit)
ila = internal limit active
rm = remote
w = warning
sod = switch on disabled
qs = quick stop
ve = voltage enabled
f = fault
oe = operation enabled
so = switched on
rtso = ready to switch on

bit6, 5, 3-0 (switch on disabled / quick stop / fault / operation enable / switched on / ready to switch on):
This bit enables to confirm the PDS state. The table below lists the states and corresponding bits:

Statusword	PDS state	
xxxx xxxx x0xx 0000 b	Not ready to switch on	Initialization non-completed
xxxx xxxx x1xx 0000 b	Switch on disabled	Initialization completed
xxxx xxxx x01x 0001 b	Ready to switch on	Main circuit power OFF
xxxx xxxx x01x 0011 b	Switched on	Servo-off/servo ready
xxxx xxxx x01x 0111 b	Operation enabled	Servo-on
xxxx xxxx x00x 0111 b	Quick stop active	Immediate stop
xxxx xxxx x0xx 1111 b	Fault reaction active	Error (alarm) discriminated
xxxx xxxx x0xx 1000 b	Fault	Error (alarm) state

bit4 (voltage enabled):
If 1, the main circuit power voltage is applied to PDS.

bit5 (quick stop):
If 0, it indicates PDS responds to quick stop request.
Quick stop enabled if the bit is '0'.
Please keep in mind that the bit performs reverse operation compared to other bits.

bit7 (warning):
If 1, it is indicating a warning. The PDS state does not change during the warning,
also, continues the motor operation.

bit8 (reserved):
This bit is not used (fixed at 0).

bit9 (remote):
If 0 (local), 6040h (Control word) indicates the state of impossible processing.
If 1 (remote), 6040h (Control word) indicates the state of possible processing.
It will be set to 1 if ESM state transitions to over PreOP or more.

bit13, 12, 10 (operation mode specific) :
Below table shows the behavior of the operation mode(Op-mode) specific bits.
(For details, refer to the relevant object's section of each operation mode.)

-: not used(Indefinite)

Op-mode	bit13	bit12	bit10
pp	following error	set-point acknowledge	target reached
pv	max slippage error (Not supported)	speed	target reached
tq	-	-	target reached
hm	homing error	homing attained	target reached
ip	-	ip mode active	target reached
csp	following error	drive follows command value	-
csv	-	drive follows command value	-
cst	-	drive follows command value	-

bit11(internal limit active) :

Bit11(internal limit active) of the 6041h(Statusword) is set to 1 when the internal limit factor occurs.
The following indicates the factors at which bit11(internal limit active) of the 6041h(Statusword) is set to 1.

Bit11(internal limit active) of the 6041h(Statusword) is indicate conditions for which be 1 below.

Control mode		Internal limiting factor	Servo on / off state
Position control	pp,csp	Emergncy stop *1)	on
		Torque limit	on *2)
		Over-travel inhibition input (POT/NOT)	on / off
		Software limit	on / off
	hm	Emergncy stop *1)	on
		Torque limit	on *2)
Velocity control	pv,csv	Emergncy stop *1)	on
		Torque limit	on *2)
		Over-travel inhibition input (POT/NOT)	on / off
Torque control	tq,cst	Emergncy stop *1)	on
		Torque limit *3)	on *2)
		Over-travel inhibition input (POT/NOT)	on / off
		Rotational direction setup	on

*1) Excluding a case where torque is not limited even during emergency stop.
*2) If torque limit is 0, bit11 (internal limit active) is 1 even if servo-off.
The minimum value of the following is the torque limit.
- The sum of 6071h (Target torque) and 60B2h (Torque offset) (Only during torque control (tq, cst))
- 6072h (Max torque)
- 3013h (1st torque limit)
- 3522h (2nd torque limit) (Only for when "3521h = 2 or 4 " excluding torque control)

*3) By setting the 3703h(Output setup during torque limit), it is possible to switch the torque limit judgment conditions at the time of torque control.

Index	Sub-Index	Name / Description	Units	Range	Data Type	Access	PDO	Op-mode	EEPROM
3703h	00h	Output setup during torque limit	-	0 -1	I16	rw	No	cst tq	Yes
		Set up judgment condition of output whiletorque is limited by torque control. 0 : Turn ON at torque limit including torque command value (6071h + 60B2h) 1 : Turn ON at torque limit excluding torque command value (6071h + 60B2h)							

bit15, 14(reserved):

This bit is not used (fixed to 0).

6-5 Operation mode Setting

6-5-1 Supported Drive Modes (6502h)

The 6502h (Supported drive modes) enables to confirm the operation modes (Modes of operation) supported by this servo driver.

Index	Sub-Index	Name / Description	Units	Range	Data Type	Access	PDO	Op-mode	EEPROM
6502h	00h	Supported drive modes	-	0 - 4294967295	U32	ro	TxPDO	ALL	No

- Displays the supported operation mode(Mode of operation).
  When the value is 1, the mode is supported.

bit	31 - 16	15 - 10	9	8	7	6	5	4	3	2	1	0
Op-mode	ms	r	cst	csv	csp	ip	hm	r	tq	pv	vl	pp
Value	0･･･0	0･･･0	1	1	1	0	1	0	1	1	0	1

ms : manufacturer-specific
r : reserved

bit	Modes of operation	Abbre viation	Support *1)
0	Profile position mode	pp	Yes
1	Velocity mode	vl	No
2	Profile velocity mode	pv	Yes
3	Torque profile mode	tq	Yes
5	Homing mode	hm	Yes
6	Interpolated position mode	ip	No
7	Cyclic synchronous position mode	csp	Yes
8	Cyclic synchronous velocity mode	csv	Yes
9	Cyclic synchronous torque mode	cst	Yes

*1) Response status is different depending on the software version.

6-5-2 Modes of operation (6060h)

The operation mode is set by 6060h (Modes of operation).

Index	Sub-Index	Name / Description	Units	Range	Data Type	Access	PDO	Op-mode	EEPROM
6060h	00h	Modes of operation	-	-128 - 127	I8	rw	RxPDO	ALL	Yes

- Set the operation mode of the servo driver.
  The not supported operation mode cannot be set.

Value	Modes of operation	Abbre viation	Support *1)
-128 - -1	Reserved	-	No
0	No mode change / no mode assigned	-	Yes
1	Profile position mode	pp	Yes
2	Velocity mode	vl	No
3	Profile velocity mode	pv	Yes
4	Torque profile mode	tq	Yes
6	Homing mode	hm	Yes
7	Interpolated position mode	ip	No
8	Cyclic synchronous position mode	csp	Yes
9	Cyclic synchronous velocity mode	csv	Yes
10	Cyclic synchronous torque mode	cst	Yes
11 - 127	Reserved	-	No

*1) Response status is different depending on the software version.

- Since 6060h (Modes of operation) is default = 0 (No mode change/no mode assigned), make sure to set the operation mode value after the control power-on.
  If the setting value of 6060h changes PDS state to Operation enabled when 6060h is 0, occur Err88.1” Operation mode setting error protection”.

- If not supported operation mode is set by SDO, an Abort message is returned as out of range.

- If 6060h is set to 0 after changing 6060h to the supported operation mode (pp, hm, csp, csv, cst, etc.) from initial state 6060h=0 (No mode assigned), the operation mode is not changed as "No mode changed." (The operation mode last time is held. For information, refer to section 6-5-4.)

6-5-3 Modes of operation display (6061h)

The 6061h (Modes of operation display) enables to confirm the internal operation mode of this servo driver.

After setting 6060h (Modes of operation), monitor this object to confirm that the system operation is set as expected.

Index	Sub-Index	Name / Description	Units	Range	Data Type	Access	PDO	Op-Mode	EEPROM
6061h	00h	Modes of operation display	-	-128 - 127	I8	ro	TxPDO	ALL	No

- Displays the operation mode at present.
  The definition is the same as 6060h (Modes of operation).

Value	Modes of operation	Abbre viation	Support *1)
-128 - -1	Reserved	-	No
0	No mode change / no mode assigned	-	Yes
1	Profile position mode	pp	Yes
2	Velocity mode	vl	No
3	Profile velocity mode	pv	Yes
4	Torque profile mode	tq	Yes
6	Homing mode	hm	Yes
7	Interpolated position mode	ip	No
8	Cyclic synchronous position mode	csp	Yes
9	Cyclic synchronous velocity mode	csv	Yes
10	Cyclic synchronous torque mode	cst	Yes
11 - 127	Reserved	-	No

*1) Response status is different depending on the software version.

6-5-4 Precautions for Changing Operation mode

- The operation mode can be switched by changing the value of 6060h (Modes of operation).
- The 6061h (Modes of operation display) enables to confirm the operation mode of the servo driver at present.
- When changing the operation mode, synchronize 6060h and the RxPDO objects related to operation mode and then update.
- The values of objects that are not supported by the changed operation mode are irregular.
- About 2 ms is required from the time when the operation mode is changed until the completion of the change. During this time, the value of 6061h and the value of the object of TxPDO related to the operation mode are irregular.
- The MINAS-A6B series do not support changing the control mode during operation.
  When changing the operation mode, make sure that the motor is stopped.
  If the control mode is changed during a motor operation (including during an origin return operation and deceleration stop), the operation cannot be guaranteed.
  The mode may not be changed immediately or Err27.4 (command error protection 1) etc. may occur.
- When 6060h and 6061h are 0 and PDS state is made to change to "Operation enabled", Err88.1(Operation mode setting error protection) occurs.
- Set the values other than 0 to 6060h(Modes of operation) once, when set as 6060h=0 after that, the last operation mode is held.
- If a not supported operation mode is set to 6060h, Err88.1 (Operation mode setting error protection) occurs.
- During the full-closed control, only the position controls are supported.
  Therefore, during full-closed control, if 6060h (Modes of operation) is set to 3 (pv), 4(tq), 9 (csv), or 10 (cst), Err88.1 (Operation mode setting error protection) occurs.
- Since two-degree-of-freedom control mode(standard type) does not support torque control mode, 4 (tq) or 10 (cst) is set to 6060h (Modes of operation) while two-degree-of-freedom control mode (standard type) is enabled, Err88.1 (Operation mode setting error protection) occurs.
- Since two-degree-of-freedom control mode(synchronization type) does not support velocity control mode and torque control, 3(pv), 4(tq), 9 (csv) or 10 (cst) is set to 6060h (Modes of operation) while two-degree-of-freedom control mode (synchronization type) is enabled, Err88.1 (Operation mode setting error protection) occurs.

6-6 Position Control Function(pp,csp,ip,hm)

6-6-1 Common Position Control Function

1)-1 Position control block diagram

Monitor data of PANATERM

Monitor data of CiA402 object

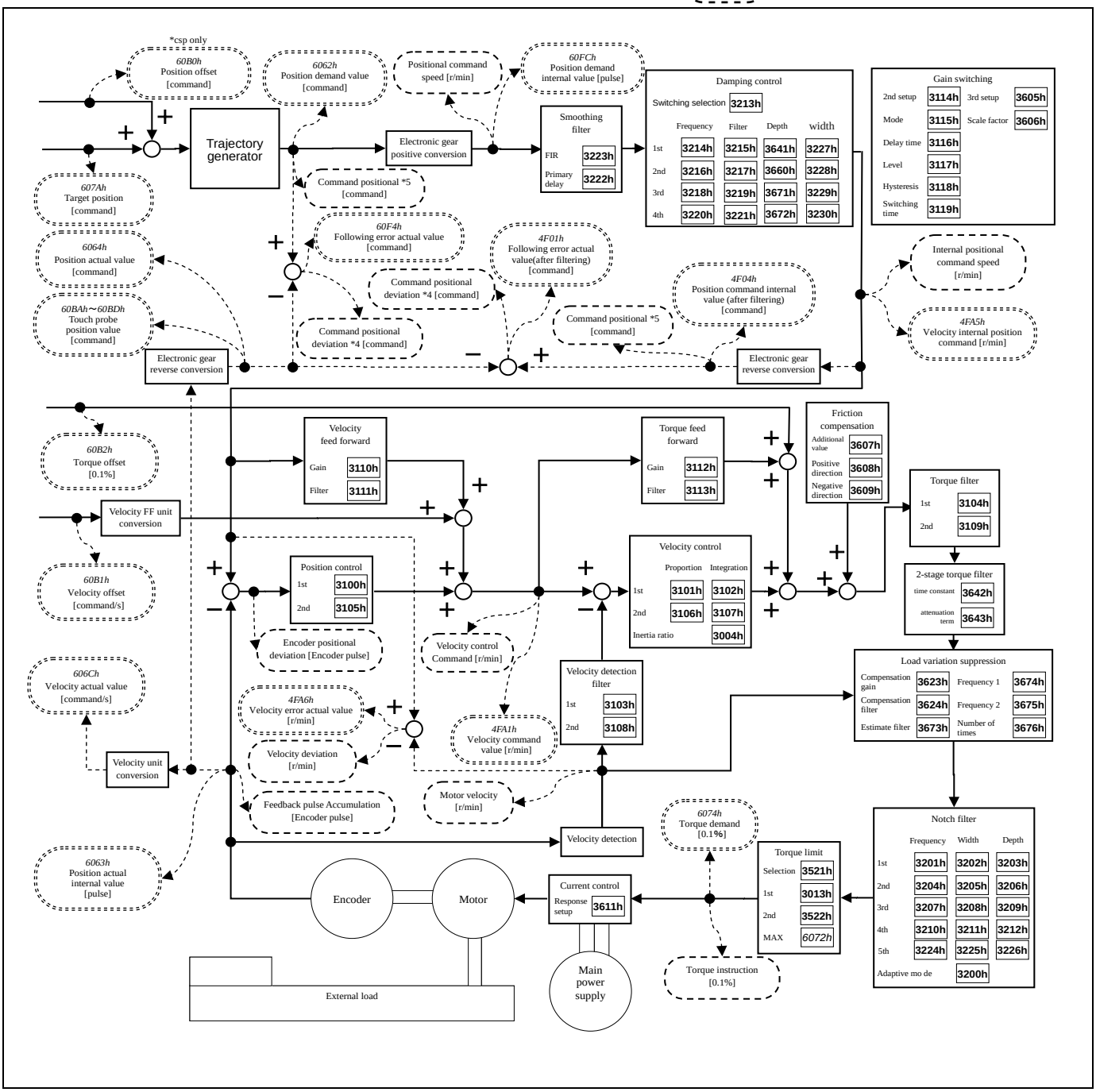

Position control block diagram

*1) A slanting number (ex.:*607Ah*) shows the object number of EtherCAT.
*2) A bold letter number (ex.:**3100h**) shows a parameter number.
*3) Polarity was omitted.
*4) The method to calculate the positional deviation on PANATERM and Analog monitor (standard) varies depending on the setting of the command positional deviation output change (bit 14) of 3723h(Communication function extended setup 2). For details, refer to the technical document, basic function specifications (SX-DSV03241), chapter 3-4.
*5) The position command on PANATERM changes depending on the setting of the bit3(Command pulse accumulation value) of 3799h(Communication function extended setup 6).
*6) When performing test run function, Z phase search, Frequency characteristic measurement (position loop characteristic) from PANATERM , the driver switches to position control mode internally.

In 2 degrees of freedom control mode, the structure in the following block diagram is adopted.

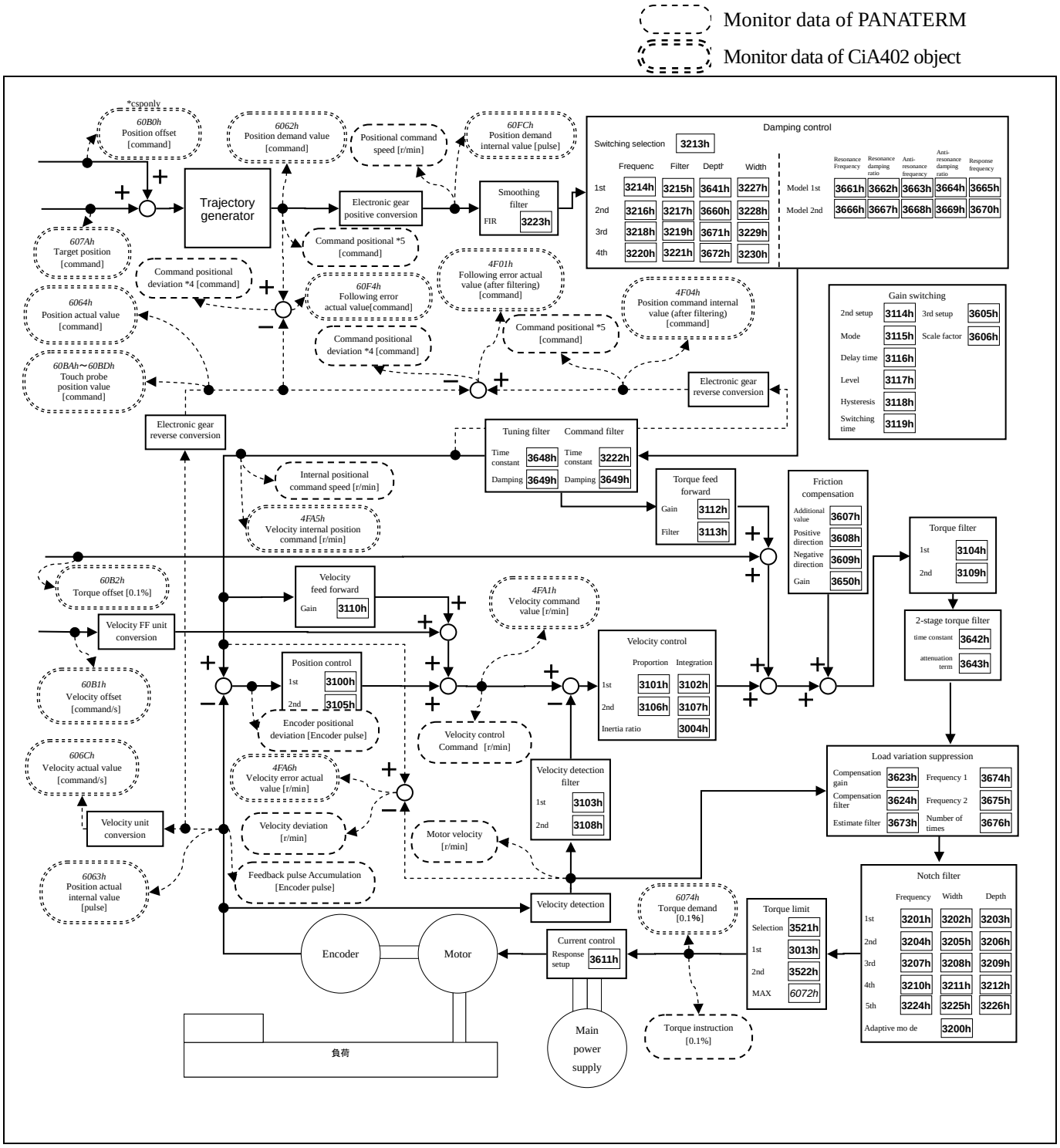

Block diagram of the 2 degrees of freedom control mode(Position control)

*1) A slanting number (ex.:*607Ah*) shows the object number of EtherCAT.
*2) A bold letter number (ex.:**3100h**) shows a parameter number.
*3) Polarity was omitted.
*4) The method to calculate the positional deviation on PANATERM and Analog monitor (standard) varies depending on the setting of the command positional deviation output change (bit 14) of 3723h(Communication function extended setup 2). For details, refer to the technical document, basic function specifications (SX-DSV03241), chapter 3-4.
*5) The position command on PANATERM changes depending on the setting of the bit3(Command pulse accumulation value) of 3799h(Communication function extended setup 6).
*6) When performing test run function, Z phase search, Frequency characteristic measurement (position loop characteristic) from PANATERM , the driver switches to position control mode internally.

1)-2 Full closed control block diagram

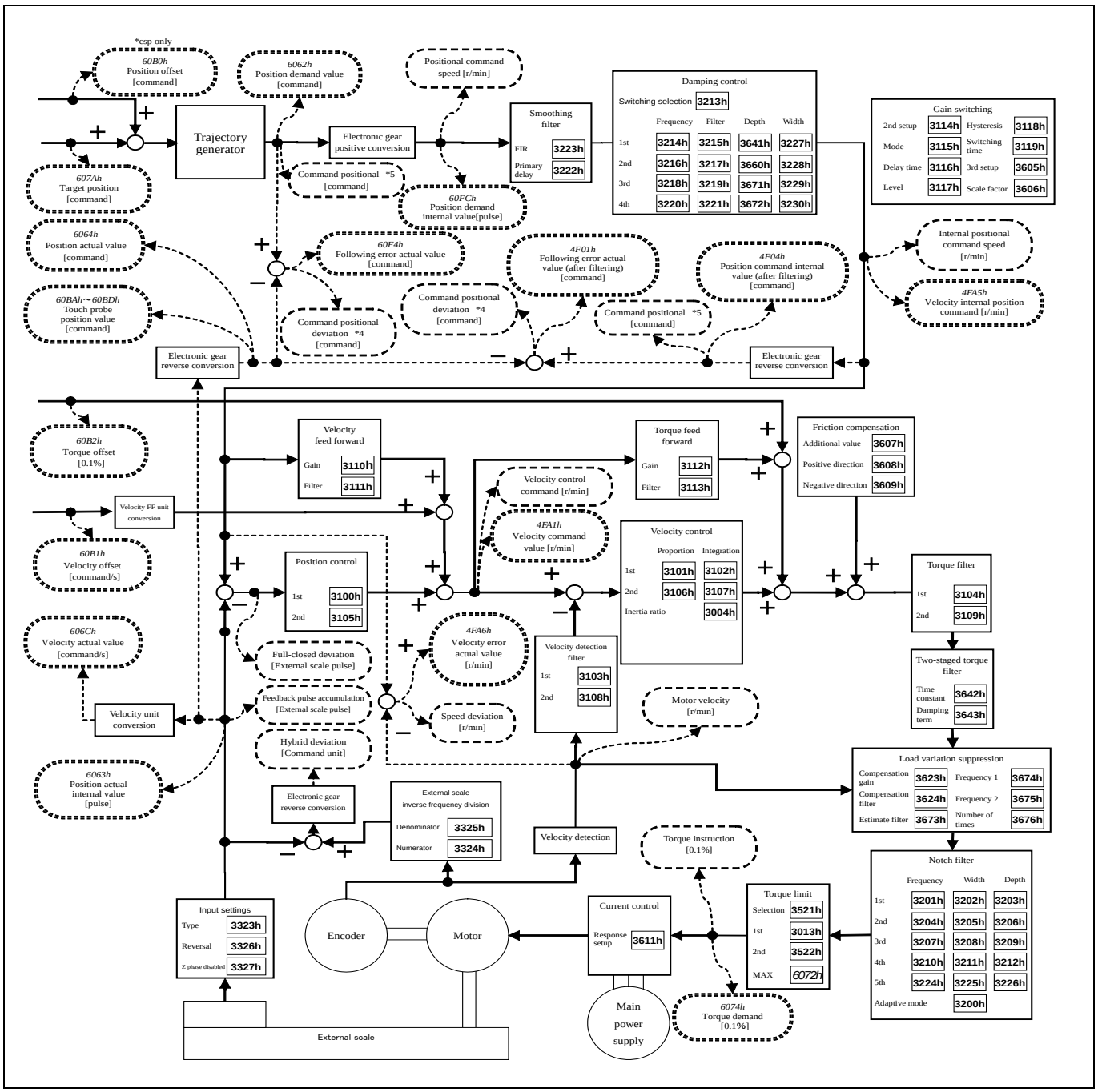

Block diagram of full-closed control

*1) A slanting number shows (ex: *607Ah*) the object number of EtherCAT.
*2) A bold letter number (ex.:3100h) shows a parameter number.
*3) Polarity was omitted.
*4) The method to calculate the positional deviation on PANATERM and Analog monitor varies depending on the setting of bit14 (command positional deviation output change) of Pr 7.23 (Communication function extended setup 2).
*5) The position command on PANATERM can be switched depending on the setting of the bit3 (Command pulse accumulation value) of Pr7.99(Communication function extended setup 6).

In 2 degrees of freedom control mode, the structure in the following block diagram is adopted.

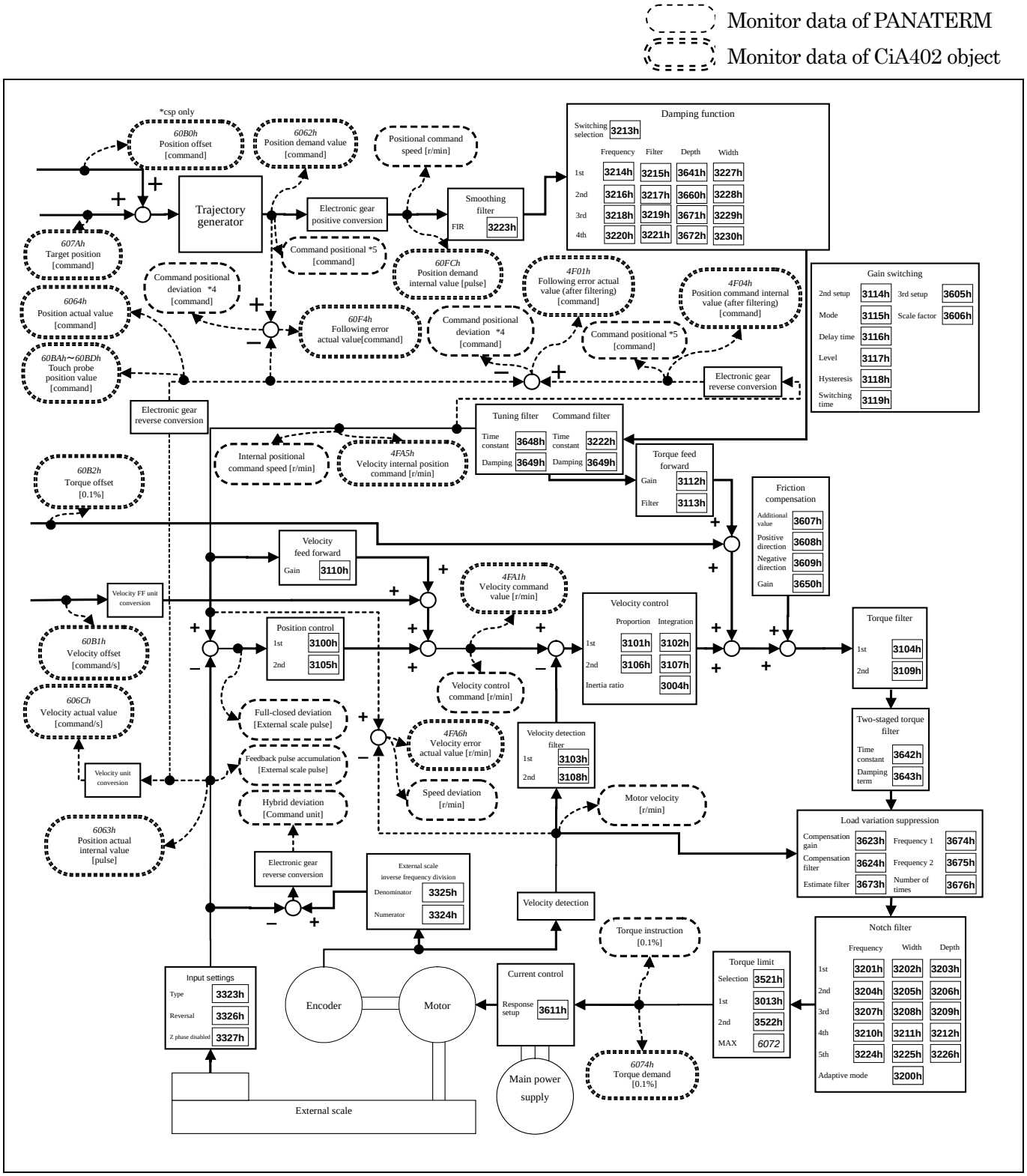

Two-degree-of-freedom control mode (with full-closed control) block diagram

*1) A slanting number shows (ex: *607Ah*) the object number of EtherCAT.
*2) A bold letter number (ex.:3100h) shows a parameter number.
*3) Polarity was omitted.
*4) The method to calculate the positional deviation on PANATERM (standard) varies depending on the setting of bit14 (command positional deviation output change) of Pr7.23 (Communication function extended setup 2).
*5) The position command on PANATERM can be swithched depending on the setting of the bit3 (Command pulse accumulation value) of Pr7.99 (Communication function extended setup 6)

2) Related objects common in position control (command & setup)

Index	Sub-Index	Name	Units	Range	Data Type	Access	PDO	Supported mode			
								pp	csp	ip	hm
6040h	00h	Controlword	-	0 - 65535	U16	rw	RxPDO	Yes	Yes	Yes	Yes
6072h	00h	Max torque	0.1%	0 - 65535	U16	rw	RxPDO	Yes	Yes	Yes	Yes
607Ah	00h	Target position	Command	-2147483648 - 2147483647	I32	rw	RxPDO	Yes	Yes	-	-
607Dh	-	Software position limit	-	-	-	-	-	Yes	Yes	Yes	—
	00h	Number of entries	-	2	U8	ro	No				
	01h	Min position limit	Command	-2147483648 – 2147483647	I32	rw	RxPDO				
	02h	Max position limit	Command	-2147483648 – 2147483647	I32	rw	RxPDO				
607Fh	00h	Max profile velocity	Command/s	0 - 4294967295	U32	rw	RxPDO	Yes	-	Yes	Yes
6080h	00h	Max motor speed	r/min	0 - 4294967295	U32	rw	RxPDO	Yes	Yes	Yes	Yes
6081h	00h	Profile velocity	Command/s	0 - 4294967295	U32	rw	RxPDO	Yes	-	Yes	-
6082h	00h	End velocity	Command/s	0 - 4294967295	U32	rw	RxPDO	Yes	-	Yes	-
6083h	00h	Profile acceleration	Command/s^2	0 - 4294967295	U32	rw	RxPDO	Yes	-	Yes	-
6084h	00h	Profile deceleration	Command/s^2	0 - 4294967295	U32	rw	RxPDO	Yes	-	Yes	-
60B1h	00h	Velocity offset	Command/s	-2147483648 - 2147483647	I32	rw	RxPDO	Yes	Yes	Yes	Yes
60B2h	00h	Torque offset	0.1%	-32768 - 32767	I16	rw	RxPDO	Yes	Yes	Yes	Yes
60C5h	00h	Max acceleration	Command/s^2	0 - 4294967295	U32	rw	RxPDO	Yes	-	Yes	Yes
60C6h	00h	Max deceleration	Command/s^2	0 - 4294967295	U32	rw	RxPDO	Yes	-	Yes	Yes
60F2h	00h	Positioning option code	-	0 - 32767	U16	rw	RxPDO	Yes	-	-	-

- Besides, there are related objects for each operation mode.
  Refer to the section "Related objects" of each operation mode.

- The function of 6040h (Control word) can differ according to the operation mode.
  Refer to the section "Related objects" of each operation mode.

- Position system

Index	Sub-Index	Name / Description	Units	Range	Data Type	Access	PDO	Op-mode	EEPROM
607Ah	00h	Target position	Command	-2147483648 - 2147483647	I32	rw	RxPDO	pp csp	No
		Set the target position.							

- Velocity system

Index	Sub-Index	Name / Description	Units	Range	Data Type	Access	PDO	Op-mode	EEPROM
607Fh	00h	Max profile velocity	Command/s	0 - 4294967295	U32	rw	RxPDO	pp hm ip pv	Yes
		• Set the velocity limit. • The maximum value is limited by the internal processing at 6080h(Max motor speed).							
6080h	00h	Max motor speed	r/min	0 - 4294967295	U32	rw	RxPDO	ALL	Yes *1)
		• Set the maximum speed of motor. • The maximum value is limited by the maximum speed read from the motor in internal processing. • At tq or cst, the speed is limited with the setting value of this object. *1) In the first edition of the software version (Ver1.01), it is not supported for backup to EEPROM. The maximum speed read from the motor is set when the control power is turned on. In the enhanced software version 1 (Ver1.02) and later, it is supported for backup to EEPROM. The value stored in EEPROM is set when the control power is turned on.							
6081h	00h	Profile velocity	Command/s	0 - 4294967295	U32	rw	RxPDO	pp ip	Yes
		• Set the target velocity. • The maximum value is limited by the internal processing at either the smaller 607Fh(Max profile velocity) and 6080h(Max motor speed).							
6082h	00h	End velocity	Command/s	0 - 4294967295	U32	rw	RxPDO	pp ip	Yes
		• Set the end velocity. Because this servo driver does not support it, always returns 0.							
60B1h	00h	Velocity offset	Command/s	-2147483648 - 2147483647	I32	rw	RxPDO	pp hm ip pv csp csv	Yes
		• Set the offset of the velocity command (velocity feedforward). • The maximum value is limited by the internal processing at 6080h(Max motor speed).							

- Torque system

Index	Sub-Index	Name / Description	Units	Range	Data Type	Access	PDO	Op-mode	EEPROM
6072h	00h	Max torque	0.1%	0 - 65535	U16	rw	RxPDO	ALL	Yes
		• Set the maximum torque of the motor. • The maximum value is limited by the maximum torque of the motor in the internal processing. • The maximum torque of the motor varies depending on the motor applied.							
60B2h	00h	Torque offset	0.1%	-32768 - 32767	I16	rw	RxPDO	ALL	Yes
		• Set the offset of the torque command (torque feedforward). • During slowdown in over-travel inhibition(in emergncy stop), the torque feedforward level becomes 0.							

- Acceleration and deceleration system

Index	Sub-Index	Name / Description	Units	Range	Data Type	Access	PDO	Op-mode	EEPROM
6083h	00h	Profile acceleration • Set the profile acceleration. • If it is set to 0, internal processing is treated as 1.	Command/s^2	0 – 4294967295	U32	rw	RxPDO	pp ip pv	Yes
6084h	00h	Profile deceleration • Set the profile deceleration. • If it is set to 0, internal processing is treated as 1.	Command/s^2	0 – 4294967295	U32	rw	RxPDO	pp ip pv	Yes
60C5h	00h	Max acceleration • Set the maximum acceleration. • If it is set to 0, internal processing is treated as 1.	Command/s^2	0 – 4294967295	U32	rw	RxPDO	pp hm pv ip	Yes
60C6h	00h	Max deceleration • Set the maximum deceleration. • If it is set to 0, internal processing is treated as 1.	Command/s^2	0 – 4294967295	U32	rw	RxPDO	pp hm pv ip	Yes

- Other

Index	Sub-Index	Name / Description	Units	Range	Data Type	Access	PDO	Op-mode	EEPROM
3724h	00h	Communication function extended setup 3 bit7 : Internal value state selection of objects 60B2h(Torque offset) in servo-off (Fall prevention function in the event of Servo-ON) 0: Clear 1: Updated with the set value of 60B2h	—	-32768 - 32767	I16	rw	No	ALL	Yes

- Software position limit (607Dh)

Set to operation range of positioning command value by 607Dh(Software position limit).

Index	Sub-Index	Name / Description	Units	Range	Data Type	Access	PDO	Op-mode	EEPROM
607Dh	-	Software position limit • Set the software limit value.	-	-	-	-	-	-	-
	00h	Number of entries • Displays the number of sub-indexes for 607Dh (Software position limit).	-	2	U8	ro	No	pp ip csp	No
	01h	Min position limit • Set the software limit value in negative direction.	Command	-2147483648 - 2147483647	I32	rw	RxPDO	pp ip csp	Yes
	02h	Max position limit • Set the software limit value in positive direction.	Command	-2147483648 - 2147483647	I32	rw	RxPDO	pp ip csp	Yes

- Setting unit

607Dh (Software position limit) is set in units of command.
Set a value including 607Ch (Home offset) in the same way as 6062h (Position demand value).
For information on Home offset, refer to 6) in Section 6-9-4.

- Activation

To enable the software limit, must satisfy the following conditions.
- It is the position operation mode (pp, ip, csp).
- The position coordinate is finalized.
  Absolute mode : ESM state is PreOP or more.
  Incremental mode : The return to home position operation has been completed normally.
- 607Dh-01h < 607Dh-02h.

In incremental mode, the software limit function will be disable when the ESM state transits from Init to PreOP, so execute the homing operation again.

(Note)
At the time of position information initialization, make a setting so that the actual position is within the range of 607Dh-01h to 607Dh-02h (normal operating range).
Except when the actual position is outside of the normal operating range, the actual position can be moved only in the direction in which it falls within the normal operating range.
(It cannot be moved in the opposite direction.)
Bit 11 (internal limit active) of 6041h (Statusword) remains 1 until the actual position falls within the normal operating range.

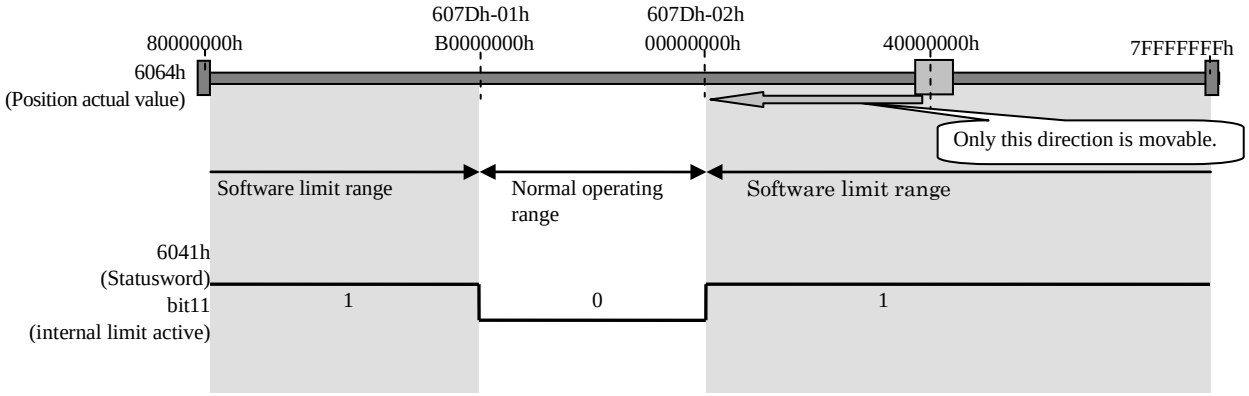

- Invalidation

If disable the software limit function, make the preset value of each object into the following conditions.
607Dh-01h >= 607Dh-02h
Example) 607Dh-01h = 0
607Dh-02h = 0

- Workings of wrap around

If want to perform the operation wraparound, please disable software limit function.
If the actual position or command position is wrapped around when the software limit function is effective, Err88.3 (improper operation error protection) will occur.
Also bit 11 (internal limit active) of 6041h (Statusword) will be indefinite.

- Workings of limit detection

Upon detection of the actual position or command position reaching the software limit during motor operation, deceleration is started according to quick stop ramp *1).
For csp control mode, however, deceleration may be started in a delayed fashion depending on the command division timing.

*1) quick stop ramp: 605Ah (Quick option code) is 2 or 6

3) Related objects common in position control (monitoring)

Index	Sub-Index	Name	Units	Range	Data Type	Access	PDO	Supported mode			
								pp	csp	ip	hm
4D29h *2)	00h	Over load factor	0.1%	0 - 65535	U16	ro	TxPDO	Yes	Yes	Yes	Yes
4F01h	00h	Following error actual value (after filtering)	Command	-2147483648 – 2147483647	I32	ro	TxPDO	Yes	Yes	Yes	Yes
4F04h	00h	Position command internal value (after filtering)	Command	-2147483648 – 2147483647	I32	ro	TxPDO	Yes	Yes	Yes	Yes
4F0Ch	00h	Velocity command value (after filtering)	Command	-2147483648 – 2147483647	I32	ro	TxPDO	Yes	Yes	Yes	Yes
4F0Dh	00h	External scale position	pulse (external scale)	-2147483648 - 2147483647	I32	ro	TxPDO	Yes	Yes	Yes	Yes
4F11h	00h	Regenerative load ratio	%	-2147483648 - 2147483647	I32	ro	TxPDO	Yes	Yes	Yes	Yes
4F31h	00h	Inertia ratio	%	-2147483648 - 2147483647	I32	ro	No	Yes	Yes	Yes	Yes
4F41h	00h	Number of entries	-	2	U8	ro	No	Yes	Yes	Yes	Yes
	01h	Mechanical angle (Single-turn data)	pulse	-2147483648 - 2147483647	I32	ro	TxPDO *1)	Yes	Yes	Yes	Yes
	02h	Multi-turn data	rotation	-2147483648 - 2147483647	I32	ro	TxPDO *1)	Yes	Yes	Yes	Yes
4F42h	00h	Electrical angle	0.0879°	-2147483648 - 2147483647	I32	ro	No	Yes	Yes	Yes	Yes
4F48h	00h	External scale pulse total	pulse (external scale)	-2147483648 - 2147483647	I32	ro	TxPDO	Yes	Yes	Yes	Yes
4F49h	00h	External scale absolute position	pulse (external scale)	-2147483648 - 2147483647	I32	ro	TxPDO	Yes	Yes	Yes	Yes
4F87h	00h	External scale data (Higher)	pulse (external scale)	-2147483648 - 2147483647	I32	ro	TxPDO	Yes	Yes	Yes	Yes
4F88h	00h	External scale data (Lower)	pulse (external scale)	-2147483648 - 2147483647	I32	ro	TxPDO	Yes	Yes	Yes	Yes
4FA1h	00h	Velocity command value	r/min	-2147483648 - 2147483647	I32	ro	TxPDO	Yes	Yes	Yes	Yes
4FA5h	00h	Velocity internal position command	r/min	-2147483648 - 2147483647	I32	ro	TxPDO	Yes	Yes	Yes	Yes
4FA6h	00h	Velocity error actual value	r/min	-2147483648 - 2147483647	I32	ro	TxPDO	Yes	Yes	Yes	Yes
4FA8h	00h	Positive direction torque limit value	0.05%	-2147483648 - 2147483647	I32	ro	TxPDO	Yes	Yes	Yes	Yes
4FA9h	00h	Negative direction torque limit value	0.05%	-2147483648 - 2147483647	I32	ro	TxPDO	Yes	Yes	Yes	Yes

*1) The first edition of the software version (Ver1.01) does not support TxPDO of 4F41h-01h and 4F41h-02h.
*2) It is not supported in software versions corresponding to function extended edition 1 (Ver1.02) or earlier.

Index	Sub-Index	Name	Units	Range	Data Type	Access	PDO	Supported mode			
								pp	csp	ip	hm
6041h	00h	Statusword	-	0 - 65535	U16	ro	TxPDO	Yes	Yes	Yes	Yes
6062h	00h	Position demand value	Command	-2147483648 - 2147483647	I32	ro	TxPDO	Yes	Yes	Yes	Yes
6063h	00h	Position actual internal value	pulse	-2147483648 - 2147483647	I32	ro	TxPDO	Yes	Yes	Yes	Yes
6064h	00h	Position actual value	Command	-2147483648 - 2147483647	I32	ro	TxPDO	Yes	Yes	Yes	Yes
6065h	00h	Following error window	Command	0 - 4294967295	U32	rw	RxPDO	Yes	Yes	-	-
6066h	00h	Following error time out	1 ms	0 - 65535	U16	rw	RxPDO	Yes	Yes	-	-
6067h	00h	Position window	Command	0 - 4294967295	U32	rw	RxPDO	Yes	-	Yes	-
6068h	00h	Position window time	1 ms	0 - 65535	U16	rw	RxPDO	Yes	-	Yes	-
6069h	00h	Velocity sensor actual value	-	-2147483648 - 2147483647	I32	ro	TxPDO	Yes	Yes	Yes	Yes
606Ch	00h	Velocity actual value	Command/s	-2147483648 - 2147483647	I32	ro	TxPDO	Yes	Yes	Yes	Yes
6074h	00h	Torque demand	0.1%	-32768 - 32767	I16	ro	TxPDO	Yes	Yes	Yes	Yes
6076h	00h	Motor rated torque	mN･m	0 - 4294967295	U32	ro	TxPDO	Yes	Yes	Yes	Yes
6077h	00h	Torque actual value	0.1%	-32768 - 32767	I16	ro	TxPDO	Yes	Yes	Yes	Yes
60F4h	00h	Following error actual value	Command	-2147483648 - 2147483647	I32	ro	TxPDO	Yes	Yes	Yes	Yes
60FAh	00h	Control effort	Command/s	-2147483648 - 2147483647	I32	ro	TxPDO	Yes	Yes	Yes	Yes
60FCh	00h	Position demand internal value	pulse	-2147483648 - 2147483647	I32	ro	TxPDO	Yes	Yes	Yes	Yes

- Besides, there are related objects for each operation mode.
  Refer to the section "Related objects" of each operation mode.

- Position system

Index	Sub-Index	Name / Description	Units	Range	Data Type	Access	PDO	Op-mode	EEPROM
4F01h	00h	Following error actual value (after filtering)	command	-2147483648 - 2147483647	I32	ro	TxPDO	pp hm csp	No
		・Position deviation (after filtering) is displayed.							
4F04h	00h	Position command internal value (after filtering)	command	-2147483648 - 2147483647	I32	ro	TxPDO	pp hm csp	No
		・Internal command position (after filtering) is displayed.							
4F0Dh	00h	External scale position	pulse (external scale)	-2147483648 - 2147483647	I32	ro	TxPDO	ALL	No
		・Position of the external scale is displayed.							
4F41h	-	Motor encoder data	-	-	-	-	-	-	-
		・Position information is displayed.							
	00h	Number of entries	-	2	U8	ro	No	ALL	No
		・The number of Sub-Index of 4F41h (Motor encoder data) is displayed.							
	01h	Mechanical angle (Single-turn data)	pulse	-2147483648 - 2147483647	I32	ro	TxPDO	ALL	No
		・Motor mechanical angle (encoder single-turn data) is displayed. (Note) The first edition of the software version (Ver1.01) does not support TxPDO.							
	02h	Multi-turn data	rotation	-2147483648 - 2147483647	I32	ro	TxPDO	ALL	No
		・Multi-turn data of the absolute encoder is displayed. (Note) The first edition of the software version (Ver1.01) does not support TxPDO.							
4F42h	00h	Electrical angle	0.0879°	-2147483648 - 2147483647	I32	ro	No	ALL	No
		・The electrical angle of the motor is displayed.							
4F48h	00h	External scale pulse total	pulse (external scale)	-2147483648 – 2147483647	I32	ro	TxPDO	pp hm csp	No
		・Sum of external scale pulse counts is displayed.							
4F49h	00h	External scale absolute position	pulse (external scale)	-2147483648 – 2147483647	I32	ro	TxPDO	pp hm csp	No
		・Absolute position of the external scale is displayed.							
4F87h	00h	External scale data (Higher)	pulse (external scale)	-2147483648 – 2147483647	I32	ro	TxPDO	ALL	No
		・Higher 24 bits of external scale data is displayed.							
4F88h	00h	External scale data (Lower)	pulse (external scale)	-2147483648 – 2147483647	I32	ro	TxPDO	ALL	No
		・Lower 24 bits of external scale data is displayed.							

- Position system

Index	Sub-Index	Name / Description	Units	Range	Data Type	Access	PDO	Op-mode	EEPROM
6062h	00h	Position demand value	Command	-2147483648 - 2147483647	I32	ro	TxPDO	pp hm ip csp	No
		• Indicates a command position (= IPOS).							
6063h	00h	Position actual internal value	pulse	-2147483648 – 2147483647	I32	ro	TxPDO	ALL	No
		• Indicate the motor of actual position. If full-close control or encoder unit other than full-closed control, is external scale unit.							
6064h	00h	Position actual value	Command	-2147483648 – 2147483647	I32	ro	TxPDO	ALL	No
		• Indicate the motor of actual position(= APOS). Under full-closed control, this is the external scale position.							
60F4h	00h	Following error actual value	Command	-2147483648 – 2147483647	I32	ro	TxPDO	pp ip hm csp	No
		• Indicate internal deviation(= PERR).							
60FCh	00h	Position demand internal value	pulse	-2147483648 – 2147483647	I32	ro	TxPDO	pp ip hm csp	No
		• Indicates an internal command position.							

- Velocity system

Index	Sub-Index	Name / Description	Units	Range	Data Type	Access	PDO	Op-mode	EEPROM
4F0Ch	00h	Velocity command value (after filtering)	r/min	-2147483648 - 2147483647	I32	ro	TxPDO	pp hm csp	No
		・Command velocity (after filtering) is displayed.							
4FA1h	00h	Velocity command value	r/min	-2147483648 - 2147483647	I32	ro	TxPDO	ALL	No
		・Velocity control command is displayed.							
4FA5h	00h	Velocity internal position command	r/min	-2147483648 - 2147483647	I32	ro	TxPDO	pp hm csp	No
		・Internal position command velocity is displayed.							
4FA6h	00h	Velocity error actual value	r/min	-2147483648 - 2147483647	I32	ro	TxPDO	pp hm csp	No
		・Velocity deviation is displayed.							
6069h	00h	Velocity sensor actual value	—	-2147483648 – 2147483647	I32	ro	TxPDO	ALL	No
		• Indicate sensor value of actual velocity. Return 0 always because this servo driver not supported.							
606Ch	00h	Velocity actual value	Command/s	-2147483648 – 2147483647	I32	ro	TxPDO	ALL	No
		• Indicate the motor of actual velocity(= FSPD).							
60FAh	00h	Control effort	Command/s	-2147483648 – 2147483647	I32	ro	TxPDO	pp ip hm csp	No
		• Indicate command value of internal velocity(output position loop).							

- Torque system

Index	Sub-Index	Name / Description	Units	Range	Data Type	Access	PDO	Op-mode	EEPROM
4D29h	00h	Over load factor	0.1%	0 – 65535	U16	ro	TxPDO	ALL	No
		• The ratio [0.1%] to the rated load is displayed. (Note) It is not supported in software versions corresponding to function extended edition 1 (Ver1.02) or earlier.							
4F11h	00h	Regenerative load ratio	%	-2147483648 - 2147483647	I32	ro	TxPDO	ALL	No
		・Regenerative load ratio (ratio of the alarm occurrence level of Over-regeneration load protection) is displayed.							
4F31h	00h	Inertia ratio	%	-2147483648 - 2147483647	I32	ro	No	ALL	No
		・Inertia ratio is displayed. The ratio of load inertia to the motor's rotor inertia (equivalent of 3004h) Inertia ratio = (load inertia/rotor inertia) x 100							
4FA8h	00h	Positive direction torque limit value	0.05%	-2147483648 - 2147483647	I32	ro	TxPDO	ALL	No
		・Positive direction torque limit value is displayed.							
4FA9h	00h	Negative direction torque limit value	0.05%	-2147483648 - 2147483647	I32	ro	TxPDO	ALL	No
		・Negative direction torque limit value is displayed.							
6074h	00h	Torque demand	0.1%	-32768 – 32767	I16	ro	TxPDO	ALL	No
		• Indicates an internal command torque.							
6076h	00h	Motor rated torque	mN・m	0 – 4294967295	U32	ro	TxPDO	ALL	No
		• Reads out the rated torque from the motor and automatically sets it.							
6077h	00h	Torque actual value	0.1%	-32768 – 32767	I16	ro	TxPDO	ALL	No
		• Indicates actual torque. • It becomes a value equivalent to actual current value. • This output value is a reference value and does not guarantee an actual value.							

- Statusword (6041h) <Common functions in position control>

This section describes the following functions of 6041h (Statusword).
bit 10: target reached (completed positioning detected)
bit 13: following error (position over-deviation detected)
For other functions, refer to the section "Related objects" of each operation mode.

Index	Sub-Index	Name / Description	Units	Range	Data Type	Access	PDO	Op-mode	EEPROM
6041h	00h	Statusword	-	0 - 65535	U16	ro	TxPDO	ALL	No

• Displays the servo driver state.

bit information details

15 - 14	13	12	11	10	9	8	7	6	5	4	3	2	1	0
r	oms following error (only pp,csp)	oms (differ in operation mode)	ila	oms target reached (except csp)	rm	r	w	sod	qs	ve	f	oe	so	rtso

r = reserved (not supported)
oms = operation mode specific (operation mode dependent bit)
ila = internal limit active
rm = remote
w = warning
sod = switch on disabled
qs = quick stop
ve = voltage enabled
f = fault
oe = operation enabled
so = switched on
rtso = ready to switch on

bit10 : target reached (Position reached)

When the servo is on (Operation enabled state), all set-points have been released with the command generation completed, the difference between 6062h (Position demand value) and 6064h (Position actual value) is within the range set in 6067h (Position window), and the time set in 6068h (Position window time) elapses, bit 10 (target reached) of 6041h (Statusword) is set to 1.

bit	Name	Value	Definition
10	target reached	0	halt=0 (during normal operation) : Positioning not yet completed halt=1 (during stop by halt) : During axis deceleration
		1	halt=0 (during normal operation) : Positioning completed halt=1 (during stop by halt) : Axis stop (Axis speed is 0.)

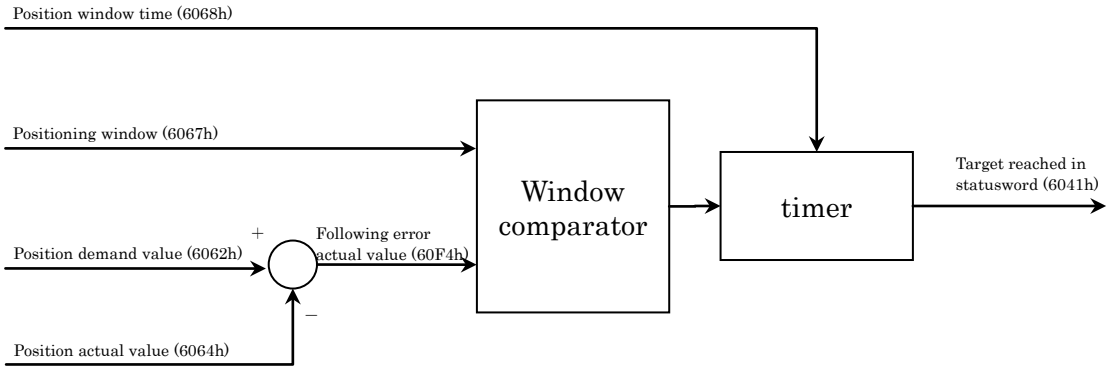

<Position reached (functional overview)>

Index	Sub-Index	Name / Description	Units	Range	Data Type	Access	PDO	Op-mode	EEPROM
6067h	00h	Position window	Command	0 - 4294967295	U32	rw	RxPDO	pp ip	Yes
		• Set the threshold where bit 10 (Target reached) of 6041h (Statusword) becomes 1 when the difference between 6062h (Position demand value) and 6064h (Position actual value) is within the range set by this parameter and the time set in 6068h (Position window time) elapses. If the position deviation is out of the values set by this parameter, the bit 10 of 6041h will be 0.							
6068h	00h	Position window time	1 ms	0 - 65535	U16	rw	RxPDO	pp ip	Yes
		• Set the time until bit 10 of 6041h (Statusword) is turned ON when the difference between 6062h (Position demand value) and 6064h (Position actual value) is within the range set by 6067h (Position window).							

For Positioning complete output (INP/INP2) function, refer to the technical document, basic function specifications (SX-DSV03241), section 4-2-4.

bit13 : following error

When the value of 60F4h(Following error actual value) goes beyond the range set by 6065h (Following error window) for the time set by 6066h (Following error time out), the bit 13(following error) of 6041h (Statusword) is set to 1.

bit	Name	Value	Definition
13	following error	0	When 60F4h (Following error actual value) (= 6062h (Position demand value) - 6064h (Position actual value)) does not go beyond the range set by 6065h (Following error window). Or, 60F4h goes beyond the value set by 6065h but the time set by 6066h does not elapse.
		1	60F4h (Following error actual value) goes beyond the range set by 6065h (Following error window) for the time or more set by 6066h (Following error time out)

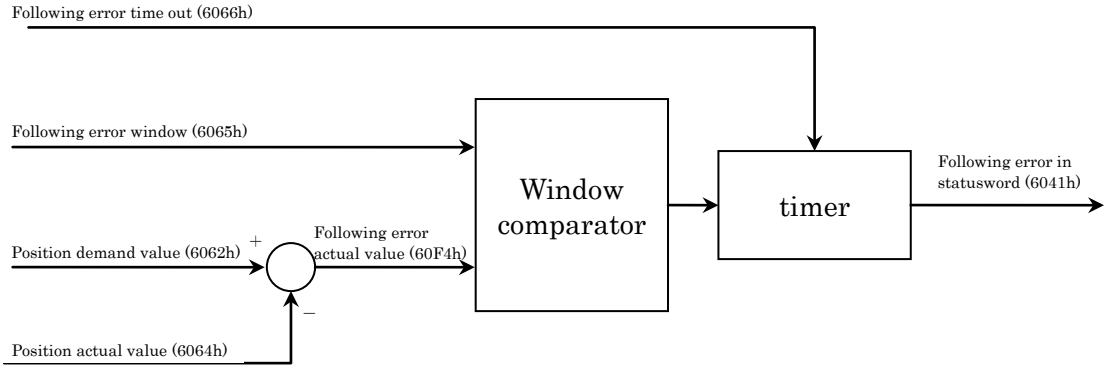

<Following error (functional overview)>

Index	Sub-Index	Name / Description	Units	Range	Data Type	Access	PDO	Op-mode	EEPROM
6065h	00h	Following error window	Command	0 - 4294967295	U32	rw	RxPDO	pp csp	Yes
		• Set the threshold where the bit13 (following error) of 6041h (Statusword) will be 1 when the value of 604Fh(Following error actual value) is out of the values set by this parameter.							
6066h	00h	Following error time out	1 ms	0 - 65535	U16	rw	RxPDO	pp csp	Yes
		• If the state which the value of 604Fh(Following error actual value) is exceeded setting range of 6065h(Following error window) is continued more than setting value of this parameters, bit13(following error) of 6041h(Statusword) is set 1.							

6-6-2 Profile Position mode (pp mode)

It is a position control mode to operate by designating the target position, target velocity, addition-subtraction velocity, etc. and creating a position command in the servo driver.
In this control mode, please use the communication cycle of 250μs or more.

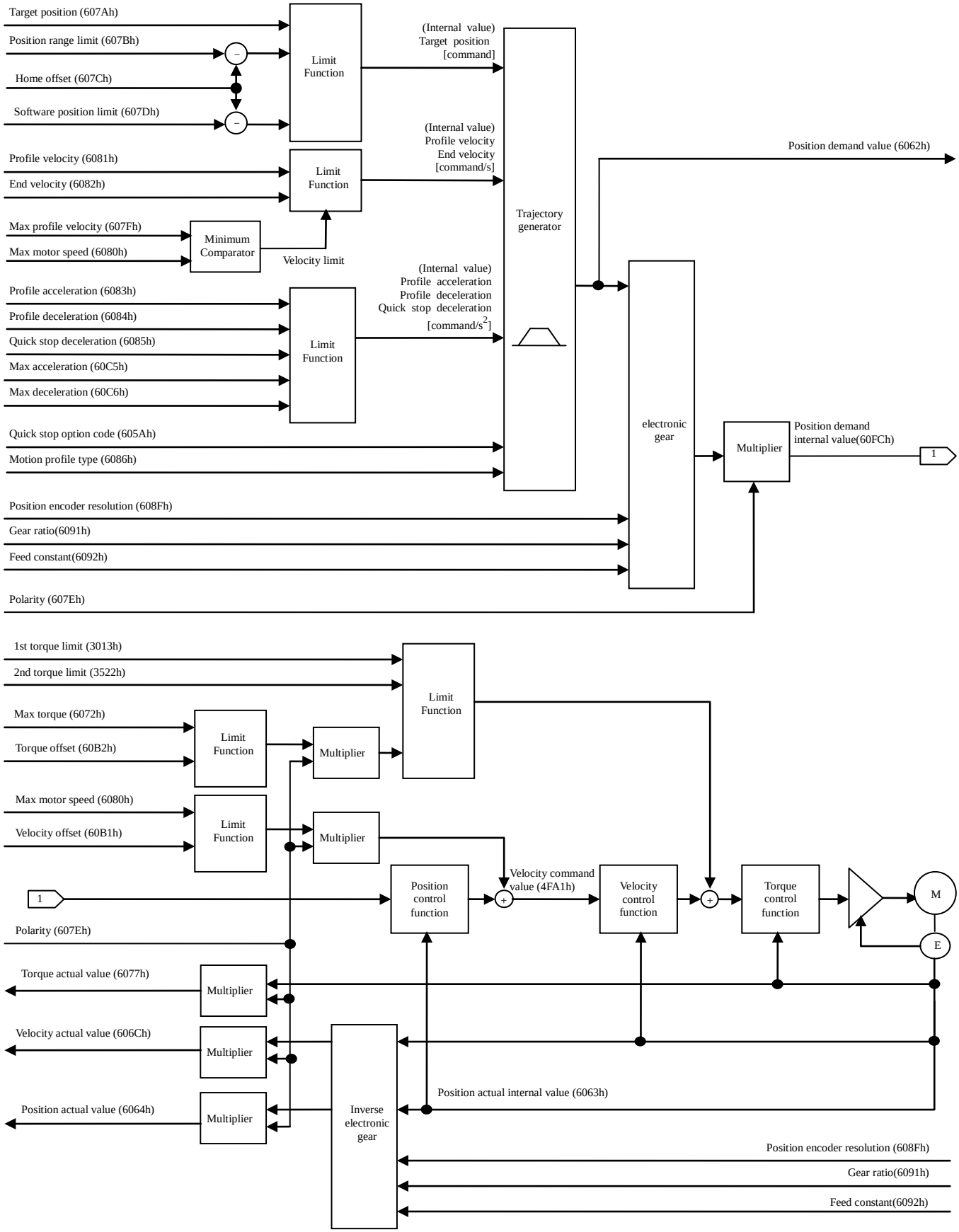

1) Objects related to pp mode (command & setup)

Index	Sub-Index	Name	Units	Range	Data Type	Access	PDO
6040h	00h	Controlword	-	0 - 65535	U16	rw	RxPDO
60F2h	00h	Positioning option code	-	0 - 32767	U16	rw	RxPDO

- Besides, there are related objects common to the position control.
  For more information, refer to section 6-6-1.

Index	Sub-Index	Name	Units	Range	Data Type	Access	PDO
6072h	00h	Max torque	0.1%	0 - 65535	U16	rw	RxPDO
607Ah	00h	Target position	Command	-2147483648 - 2147483647	I32	rw	RxPDO
607Dh	-	Software position limit	-	-	-	-	-
	00h	Number of entries	-	2	U8	ro	No
	01h	Min position limit	Command	-2147483648 – 2147483647	I32	rw	RxPDO
	02h	Max position limit	Command	-2147483648 – 2147483647	I32	rw	RxPDO
607Fh	00h	Max profile velocity	Command/s	0 - 4294967295	U32	rw	RxPDO
6080h	00h	Max motor speed	r/min	0 - 4294967295	U32	rw	RxPDO
6081h	00h	Profile velocity	Command/s	0 - 4294967295	U32	rw	RxPDO
6082h	00h	End velocity	Command/s	0 - 4294967295	U32	rw	RxPDO
6083h	00h	Profile acceleration	Command/s^2	0 - 4294967295	U32	rw	RxPDO
6084h	00h	Profile deceleration	Command/s^2	0 - 4294967295	U32	rw	RxPDO
60B1h	00h	Velocity offset	Command/s	-2147483648 - 2147483647	I32	rw	RxPDO
60B2h	00h	Torque offset	0.1%	-32768 - 32767	I16	rw	RxPDO
60C5h	00h	Max acceleration	Command/s^2	0 - 4294967295	U32	rw	RxPDO
60C6h	00h	Max deceleration	Command/s^2	0 - 4294967295	U32	rw	RxPDO

- There is a related object of common motion as well.
  For more information, refer to chapter 6-9.

Index	Sub-Index	Name	Units	Range	Data Type	Access	PDO
6007h	00h	Abort connection option code	—	0 - 3	I16	rw	No
605Ah	00h	Quick stop option code	—	-2 - 7	I16	rw	No
605Bh	00h	Shutdown option code	—	0 - 1	I16	rw	No
605Ch	00h	Disable operation option code	—	0 - 1	I16	rw	No
605Dh	00h	Halt option code	—	1 - 3	I16	rw	No
605Eh	00h	Fault reaction option code	—	0 - 2	I16	rw	No
607Bh	-	Position range limit	-	-	-	-	-
	00h	Highest sub-index supported	-	2	U8	ro	No
	01h	Min position range limit	Command	-2147483648 – 2147483647	I32	rw	RxPDO
	02h	Max position range limit	Command	-2147483648 – 2147483647	I32	rw	RxPDO
607Ch	00h	Home offset	Command	-2147483648 – 2147483647	I32	rw	RxPDO
607Eh	00h	Polarity	-	0 – 255	U8	rw	No
6085h	00h	Quick stop deceleration	Command/s^2	0 – 4294967295	U32	rw	RxPDO
6086h	00h	Motion profile type	-	-32768 – 32767	I16	rw	RxPDO
608Fh	-	Position encoder resolution	-	-	-	-	-
	00h	Highest sub-index supported	-	2	U8	ro	No
	01h	Encoder increments	pulse	1 – 4294967295	U32	ro	No
	02h	Motor revolutions	r (motor)	1 – 4294967295	U32	ro	No
6091h	-	Gear ratio	-	-	-	-	-
	00h	Number of entries	-	2	U8	ro	No
	01h	Motor revolutions	r (motor)	1 – 4294967295	U32	rw	No
	02h	Shaft revolutions	r (shaft)	1 – 4294967295	U32	rw	No
6092h	-	Feed constant	-	-	-	-	-
	00h	Highest sub-index supported	-	2	U8	ro	No
	01h	Feed	Command	1 – 4294967295	U32	rw	No
	02h	Shaft revolutions	r (shaft)	1 – 4294967295	U32	rw	No
60A3h	00h	Profile jerk use	-	1 – 2, 255	U8	rw	No
60A4h	-	Profile jerk	-	-	-	-	-
	00h	Highest sub-index supported	-	2	U8	ro	No
	01h	Profile jerk1	Command/s^3	0 – 4294967295	U32	rw	No
	02h	Profile jerk2	Command/s^3	0 – 4294967295	U32	rw	No
60B8h	00h	Touch probe function	-	0 - 65535	U16	rw	RxPDO
60FEh	-	Digital outputs	-	-	-	-	-
	00h	Number of entries	-	2	U8	ro	No
	01h	Physical outputs	-	0 - 4294967295	U32	rw	RxPDO
	02h	Bit mask	-	0 - 4294967295	U32	rw	RxPDO

- Controlword (6040h) <Functions in pp mode>

Index	Sub-Index	Name / Description	Units	Range	Data Type	Access	PDO	Op-mode	EEPROM
6040h	00h	Controlword	-	0 - 65535	U16	rw	RxPDO	ALL	No

• Set a command to a servo driver including the PDS state transition.

Bit information details

15 – 10	9	8	7	6	5	4	3	2	1	0
r	oms change on set-point	h	fr	oms absolute/ relative	change set immediately	new set-point	eo	qs	ev	so

r = reserved (not supported)
oms = operation mode specific (control mode dependent bit)
h = halt
fr = fault reset
eo = enable operation
qs = quick stop
ev = enable voltage
so = switch on

bit9, 6-4(operation mode specific):

Bit	Name	Value	Definition
4	new set-point	0->1	It is a trigger to activate a positioning operation and update a set value. Imports new positioning tasks (607Ah (Target position) and 6081h (Profile velocity) etc.).
5	change set immediately	0	After the positioning operation at present is completed, next positioning operation starts.
		1	Suspends the positioning operation at present and starts next positioning operation at once. The additional option of the operation change timing is set with the cio bit (bit3-2) of 60F2h (Positioning option code).
6	absolute/ relative	0	Handles 607Ah (Target position) as an absolute position
		1	Handles 607Ah (Target position) as a relative position. The additional option in relative positioning is set with the relative option (bit1-0) of 60F2h (Positioning option code).
9	change on set-point	-	Refer to the table below This is not supported by this software version.

The table below lists the difference of an operation according to the combination of bits 9, 5 and 4.

bit 9 change on set-point	bit 5 change set immediately	bit 4 new set-point	Definition
0	0	0->1	The next positioning operation starts after the positioning operation at present is completed (refer to example 1 or 3)
X	1	0->1	The next positioning operation is performed immediately (refer to example 1 or 2)
1	0	0->1	After the positioning operation is performed to the target position at present with the present profile velocity, the next positioning operation starts (refer to example 1 or 3) This is not supported by this software version.

(NOTE) Do not change the acceleration or deceleration(*) during motor operation.
If change the acceleration or deceleration, change bit4(new set-point) from 0 to 1 after the motor stops.
(*) 6083h (Profile acceleration)
6084h (Profile deceleration)
60C5h (Max acceleration)
60C6h (Max deceleration)

- Note that when the set point is executed (bit 4 (new set-point) is changed from 0 to 1 in the following conditions, that positioning task will be discarded.
  - Set-point when 6081h (Profile velocity) = 0
  - Set-point to the direction with which the position will not get out of the limited state by the software limit
  - Set-point to the direction with which the position will not get out of the limited state by the drive prohibition

- If the following status occurs, all the positioning tasks will be discarded, so care should be taken.
  - If run-inhibition is detected during deceleration due to halt = 1
  - If run-inhibition is detected with positioning task operating to opposite direction of positioning task being executed buffered

- Allow 2 ms from the time when pp operation is started until the next pp operation is started (the new set-point is changed from 0 to 1).

- If it is stopped with halt, the setting of 6040h: bit5, 9 and 60F2h in the positioning task being executed (during a halt stop) will be cleared inside (set value 0).

- Positioning option code (60F2h)

This object is an additional option to determine the operational specifications for positioning operation in pp mode.

Index	Sub-Index	Name / Description	Units	Range	Data Type	Access	PDO	Op-mode	EEPROM
60F2h	00h	Positioning option code	-	0 - 65535	U16	rw	RxPDO	pp	Yes

• Set the specification of positioning operation.

15	14	13	12	11	10	9	8	7	6	5	4	3	2	1	0
ms	reserved									rro		cio		relative option	

ms = manufacturer-specific, rro = request-response option, cio = change immediately option

- bit1-0(relative option):

The abs/rel bit(bit6) of 6040h(Controlword) is set to 1, determine the operation specification of relative positioning when performing the operation.
Normally it is used in mode 0.

bit 1	bit 0	Relative positioning mode	Definition
0	0	mode 0	The operation is relative to the target position (absolute coordinate value) in the last operation. *1) When there is no target position in the last operation or the operation has been executed in other control modes, the operation is relative to the absolute coordinate value 0. When the operation has been executed in other control modes, the previous target position is discarded.
0	1	mode 1	The positioning is relative to the 6062h(Position demand value) (= value output by trajectory generator). *2)
1	0	mode 2	The positioning is relative to the 6064h (Position actual value). *2)
1	1	mode 3	reserved

*1) When the next operation is started in mode 0 during pausing the previous operation by over-travel inhibition or quick stop etc., the next target position becomes relative position from the previous target position.
The movement direction becomes the direction which is shorter at the distance from the command position at pausing the previous positioning operation to the next target position.
In other words, if the difference between the next target position and the command position at pausing the previous positioning operation is outside the range of -2147483648 to 2147483647, it operates in the opposite direction to the sign of the set relative position. Please be careful.
If this operation becomes problematic for applications that operate in the same direction and interrupt frequently, please use mode 1.

*2) A propagation delay or other factors may prevent the position from reaching the expected position.

- bit3-2(cio (change immediately option)):

The change set immediately bit(bit5) of 6040h(Controlword) is set 1, determine the operation specification if start the next positioning operation immediately.
This software version supports this specification only when bits 3 and 2 are both 0.
Do not set it to a value other than 0.

bit 3	bit 2	Definition
0	0	Update the operate (including changes of Profile velocity and acceleration, etc.) new positioning tasks immediately.
0	1	A new positioning task (including the changes of profile velocity, acceleration, etc.) operate continuously to the positioning task running at present arrives(continue operation without stopping on the target position of the positioning task that is currently performed.). This software version does not support this specification.
1	0	reserved
1	1	reserved

The following indicate the operation pattern by a combination of change set immediately bit(bit5) of 6040h(Controlword) and cio(change immediately option) bit(bit3-2) of 60F2h(Positioning option code).

6040h:00h(bit5) change set immediately	0		1	
60F2h:00h(bit3-2) cio(change immediately option)	00	01 (Not Supported)	00	01 (Not Supported)
When the target position was updated in the same direction and speed is accelerated.	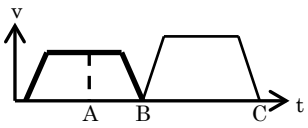		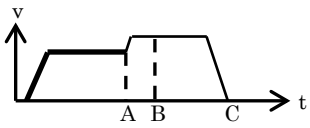	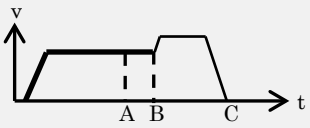
When the target position was updated in the same direction and speed is decelerated.	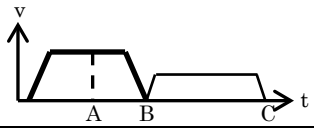		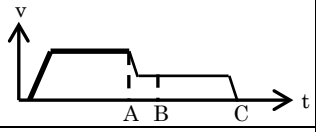	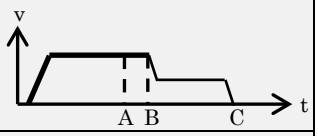
When a target position is updated to a counter direction.	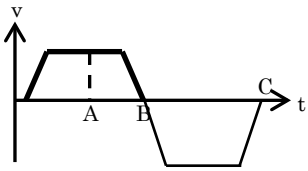		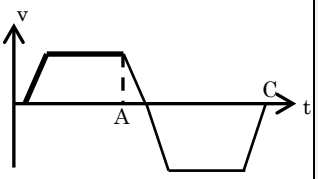 * It does not arrive at the last target position.	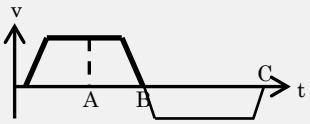

A : Timing which changed the command
B : Target position (last time) arrival timing
C : Target position (after updating) arrival timing
Thick line : It operates on condition of before changing a command.
Thin line : It operates on condition of after changing a command.

- bit5-4(rro (request-response option)):

After the positioning operation is started, the master is supposed to set the new_set-point (bit 4) of 6040h (Control word) to 0; however this option allows the slave to automatically set it to 0.

bit 5	bit 4	Definition
0	0	The handshake is necessary, as shown in the examples 1 to 3.
0	1	The slave releases the New setpoint bit automatically as soon as the drive arrives at the target position. (It is set as 0.)
1	0	The slave releases the new setpoint bit automatically as soon as the slave accepts a new target position. (It is set as 0.)
1	1	Reserved

2) Objects related to pp mode (monitoring)

Index	Sub-Index	Name	Units	Range	Data Type	Access	PDO
6041h	00h	Statusword	-	0 - 65535	U16	ro	TxPDO

- Besides, there are related objects common to the position control.
  For more information, refer to section 6-6-1.

Index	Sub-Index	Name	Units	Range	Data Type	Access	PDO
6062h	00h	Position demand value	Command	-2147483648 - 2147483647	I32	ro	TxPDO
6063h	00h	Position actual internal value	pulse	-2147483648 - 2147483647	I32	ro	TxPDO
6064h	00h	Position actual value	Command	-2147483648 - 2147483647	I32	ro	TxPDO
6065h	00h	Following error window	Command	0 - 4294967295	U32	rw	RxPDO
6066h	00h	Following error time out	1ms	0 - 65535	U16	rw	RxPDO
6067h	00h	Position window	Command	0 - 4294967295	U32	rw	RxPDO
6068h	00h	Position window time	1ms	0 - 65535	U16	rw	RxPDO
6069h	00h	Velocity sensor actual value	-	-2147483648 - 2147483647	I32	ro	TxPDO
606Ch	00h	Velocity actual value	Command/s	-2147483648 - 2147483647	I32	ro	TxPDO
6074h	00h	Torque demand	0.1%	-32768 – 32767	I16	ro	TxPDO
6076h	00h	Motor rated torque	mN•m	0 – 4294967295	U32	ro	TxPDO
6077h	00h	Torque actual value	0.1%	-32768 - 32767	I16	ro	TxPDO
60F4h	00h	Following error actual value	Command	-2147483648 - 2147483647	I32	ro	TxPDO
60FAh	00h	Control effort	Command/s	-2147483648 - 2147483647	I32	ro	TxPDO
60FCh	00h	Position demand internal value	pulse	-2147483648 - 2147483647	I32	ro	TxPDO

- There is a related object of common motion as well.
  For information, refer to section 6-9.

Index	Sub-Index	Name	Units	Range	Data Type	Access	PDO
603Fh	00h	Error code	-	0 - 65535	U16	ro	TxPDO
60B9h	00h	Touch probe status	-	0 - 65535	U16	ro	TxPDO
60BAh	00h	Touch probe pos1 pos value	Command	-2147483648 – 2147483647	I32	ro	TxPDO
60BBh	00h	Touch probe pos1 neg value	Command	-2147483648 – 2147483647	I32	ro	TxPDO
60BCh	00h	Touch probe pos2 pos value	Command	-2147483648 – 2147483647	I32	ro	TxPDO
60BDh	00h	Touch probe pos2 neg value	Command	-2147483648 – 2147483647	I32	ro	TxPDO
60FDh	00h	Digital inputs	-	0 - 4294967295	U32	ro	TxPDO

- Statusword (6041h) <Functions in pp mode>

Index	Sub-Index	Name / Description	Units	Range	Data Type	Access	PDO	Op-mode	EEPROM
6041h	00h	Statusword	-	0 - 65535	U16	ro	TxPDO	ALL	No

• Displays the servo driver state.

Bit information details

15 - 14	13	12	11	10	9	8	7	6	5	4	3	2	1	0
	oms			oms										
r	following error	set-point acknowledge	ila	target reached	rm	r	w	sod	qs	ve	f	oe	so	rtso

r = reserved (not supported)

oms = operation mode specific (control mode dependent bit)

ila = internal limit active

rm = remote

w = warning

sod = switch on disabled

qs = quick stop

ve = voltage enabled

f = fault

oe = operation enabled

so = switched on

rtso = ready to switch on

bit13,12,10(operation mode specific):

bit	Name	Value	Definition
10	target reached	-	Refer to 3) of Section 6-6-1.
12	set-point acknowledge	0	The new set-point is 0, the motion is done (in process) for the last target position, and the buffer is empty
		1	Data for a new positioning task has been imported into the buffer and it is not empty
13	following error	-	Refer to 3) of Section 6-6-1.

3) Operations of pp mode

- Example 1 (basic set-point)

[1] The master sets the value of 607Ah (Target position) and then changes the value of the bit 4 (New setpoint) of 6040h (Control word) from 0 to 1. In that case, also set 6081h (Profile velocity).
If the value of 6081h (Profile velocity) is 0, the motor does not work.

[2] The slave confirms the rising edge (from 0 to 1) of the bit 4 (New setpoint) of 6040h (Control word) and starts the positioning motion toward the target position, 607Ah (Target position). Here, the slave changes the value of the bit 12 (Setpoint acknowledge) of 6041h (Status word) from 0 to 1.

[3] The master confirms that the value of the bit12 (Setpoint acknowledge) of 6041h (Status word) is changed from 0 to 1 and puts the bit 4 (New setpoint) of 6040h (Control word) back to 0.

[4] The slave confirms that the bit 4 (New setpoint) of 6040h (Control word) is set to 0 and sets the bit 12 (Setpoint acknowledge) of 6041h (Status word) to 0.

[5] When the motion arrives at the target position, the slave changes the value of the bit 10 (Target reached) of 6041h (Status word) from 0 to 1.

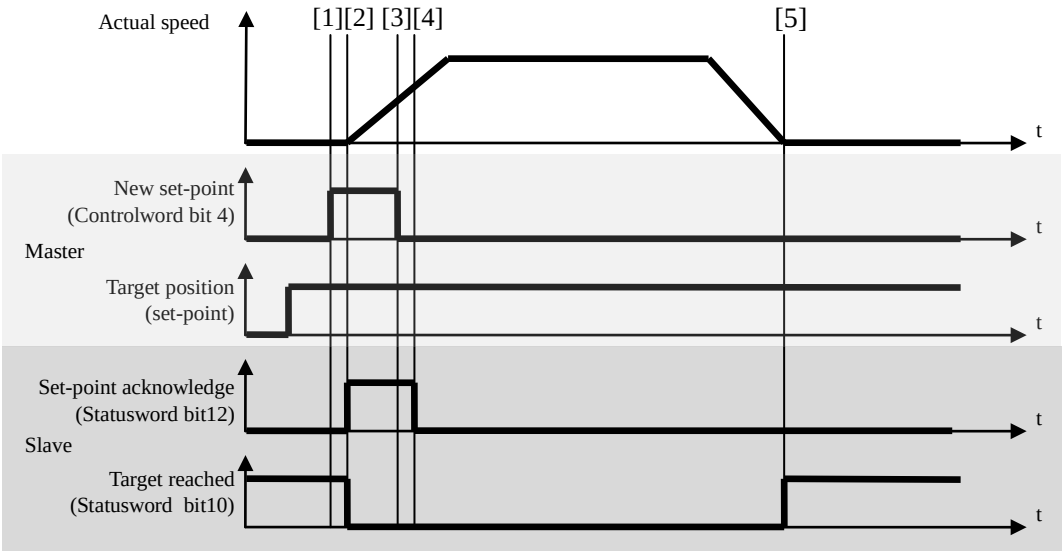

<Set-point example>

*1) 6081h (Profile velocity) is limited by the smaller of 607Fh (Max profile velocity) or 6080h (Max motor speed).
A change that is made to the preset value of 607Fh (Max profile velocity) or 6080h (Max motor speed) during operation will not be reflected in that operation.

- Example 2 (Data change in operation, without buffer: Single set-point)

When bit5(change set immediately) of 6040h(controlword) is 1, if it made changes to the data for the positioning operation during operation, interrupting the current positioning operation, is started the next positioning operation immediately.

[1] The master confirms that the bit12 (set-point acknowledge) of 6041h (Statusword) is 0, changes the value of 607Ah (Target position), and then changes the value of the bit4 (new setpoint) of 6040h (Controlword) from 0 to 1.
(Note) acceleration and deceleration must not change at this time.

[2] The slave confirms the rising edge (from 0 to 1) of the bit4 (new setpoint) of 6040h (Controlword) and updates 607Ah (Target position) with a new target position. Here, the slave changes the value of the bit12 (setpoint acknowledge) of 6041h (Statusword) from 0 to 1.

[3] The master confirms that the value of the bit12 (setpoint acknowledge) of 6041h (Statusword) is changed from 0 to 1 and puts the bit4 (new setpoint) of 6040h (Controlword) back to 0.

[4] The slave confirms that the bit4 (new setpoint) of 6040h (Controlword) is set to 0 and sets the bit12 (setpoint acknowledge) of 6041h (Statusword) to 0.

Note:
- Similar steps 1 to 4 enable to change 6081h (Profile velocity).
- Also, after changing 607Ah (Target position) and 6081h (Profile velocity), perform the steps 1 to 4 mentioned above to update 607Ah (Target position) and 6081h (Profile velocity) at the same time.

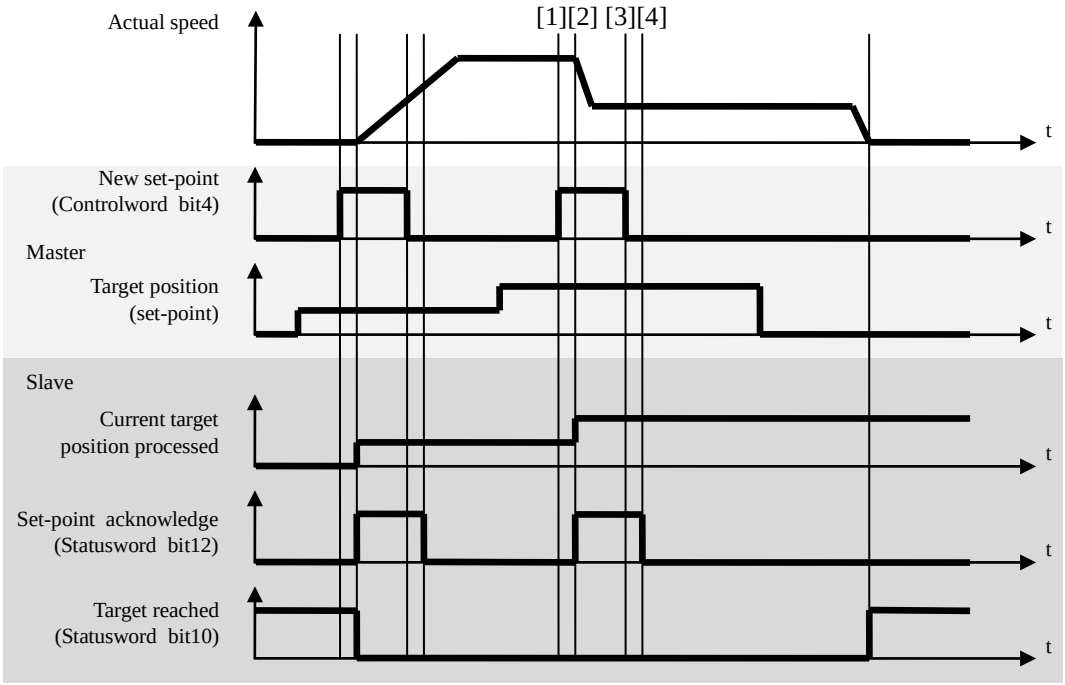

<Handshaking procedure for the single set-point method>

- Example 3 (Data change in operation, with buffer: Set of set-points)

When bit5(change set immediately) of 6040h(Controlword) is 0, if it made changes to the data for the positioning operation during operation, completing the current positioning operation, is started the next positioning operation immediately.

[1] The master confirms that the bit12 (set-point acknowledge) of 6041h (Statusword) is 0, changes the value of 607Ah (Target position), and then changes the value of the bit4 (new setpoint) of 6040h (Controlword) from 0 to 1.
(Note) acceleration and deceleration must not change at this time.

[2] The slave confirms the rising edge (0 to 1) of the bit4 (new set-point) of 6040h (Controlword) and buffers 607Ah (Target position) as a new target position.
Here, the slave changes the value of the bit12 (setpoint acknowledge) of 6041h (Statusword) from 0 to 1.
At this stage, the positioning operation is continued for the target position before the change.

[3] The master confirms that the value of the bit12 (set-point acknowledge) of 6041h (Statusword) is changed from 0 to 1 and puts the bit4 (new set-point) of 6040h (Controlword) back to 0.

[4] The slave confirms that bit4 (new set-point) of 6040h (Controlword) is set to 0 and that the current positioning operation is completed, and starts a positioning operation for the new target position. At this point, the buffer becomes empty, bit12 (set-point acknowledge) of 6041h (Statusword) is set to 0.

Note:
- Similar steps 1 to 4 enable to change 6081h (Profile velocity).
- After changing 607Ah (Target position) and 6081h (Profile velocity), perform the steps 1 to 4 mentioned above to update 607Ah (Target position) and 6081h (Profile velocity) at the same time.
- The dashed line as shown in the figure below indicates actual velocity when the bit9 (change of setpoint) of 6040h (Controlword) is set to 1.
However, if the new target position is the opposite of the operating direction, the position stops at the previous target position, and a reverse operation is performed.

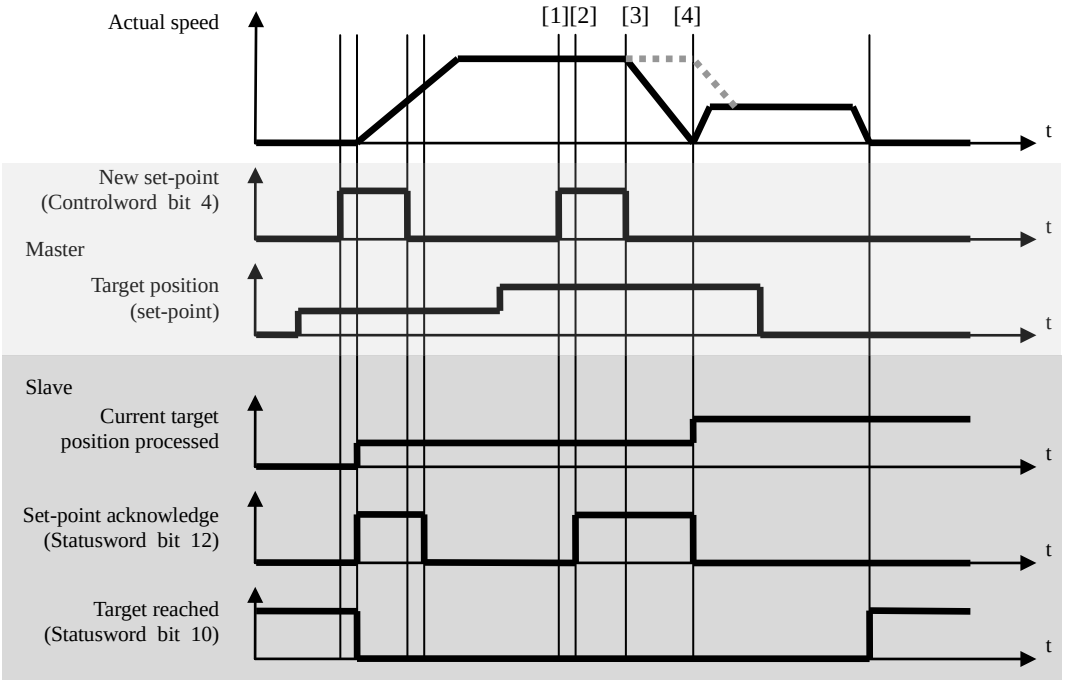

<Handshaking procedure for the set of set-point method>

- Example 4 (Buffering of set-points)

There are two set-point for the buffering set-point and the execution set-point.
The following figure indicates the handling of these set-point.

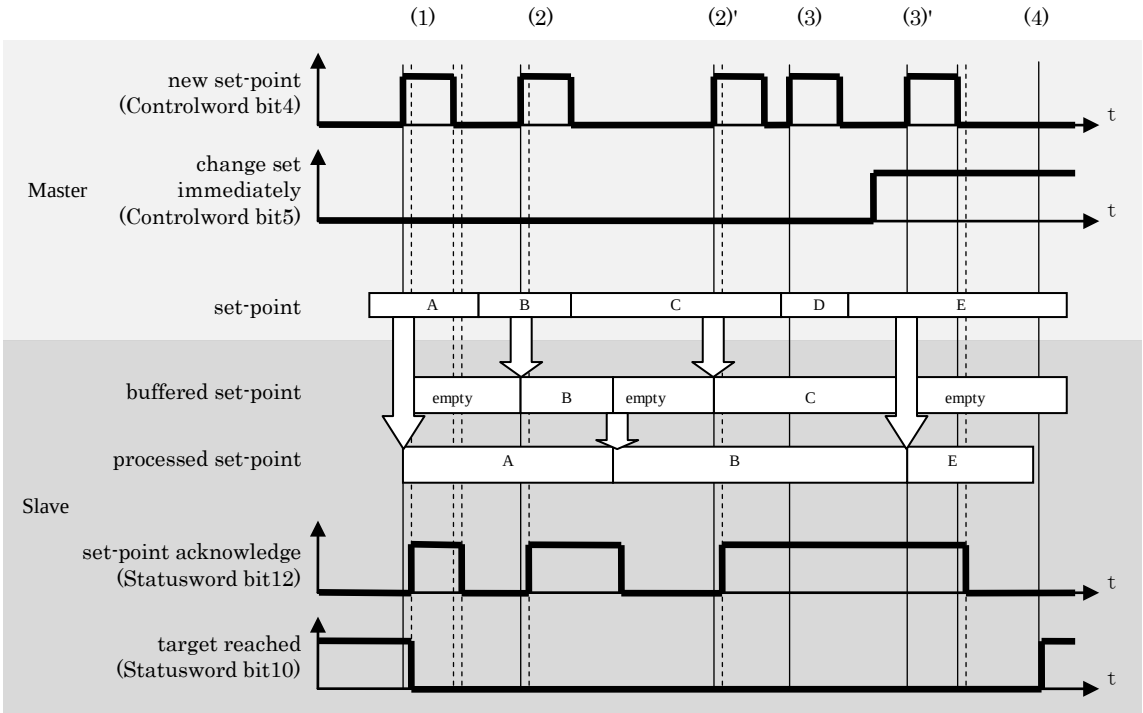

<Set-point handling for two set-points>

(1) When the set-point is not in progress, a new set-point(A) will be effective immediately.
(2) When the set-point is in progress, a new setpoint(B or C) is stored each time the first set-point buffer is empty.
(3) When all set-point buffers are in use (if the bit12(setpoint acknowledge) of 6041h(Statusword) is 1), the update of the set-point buffer is dependent on the bit5(change set immediately) of 6040h(Controlword).
If the bit5(change set immediately) of 6040h(Controlword) is not set to 1, new set-points(D) are not processed but suspended.
If the bit5(change set immediately) of 6040h(Controlword) is set to 1, new set-points(E) are processed immediately as a single set-point.
In this case, all set-points(B,C and D) loaded before the bit5(change set immediately) of 6040h(Controlword) is set to 1 are discarded.
(4) Until all set-points are processed, the bit10(target reached) of 6041h(Statusword) remains to be 0.

- Example 5 (Temporary stop by halt)

When bit8 (halt) of 6040h (Controlword) changes to 1 during pp operation, the positioning operation is stopped temporarily. When bit8 (halt) returns to 0, a positioning operation to the set-point for execution is resumed.
The following figure indicates the handling of these set-points.

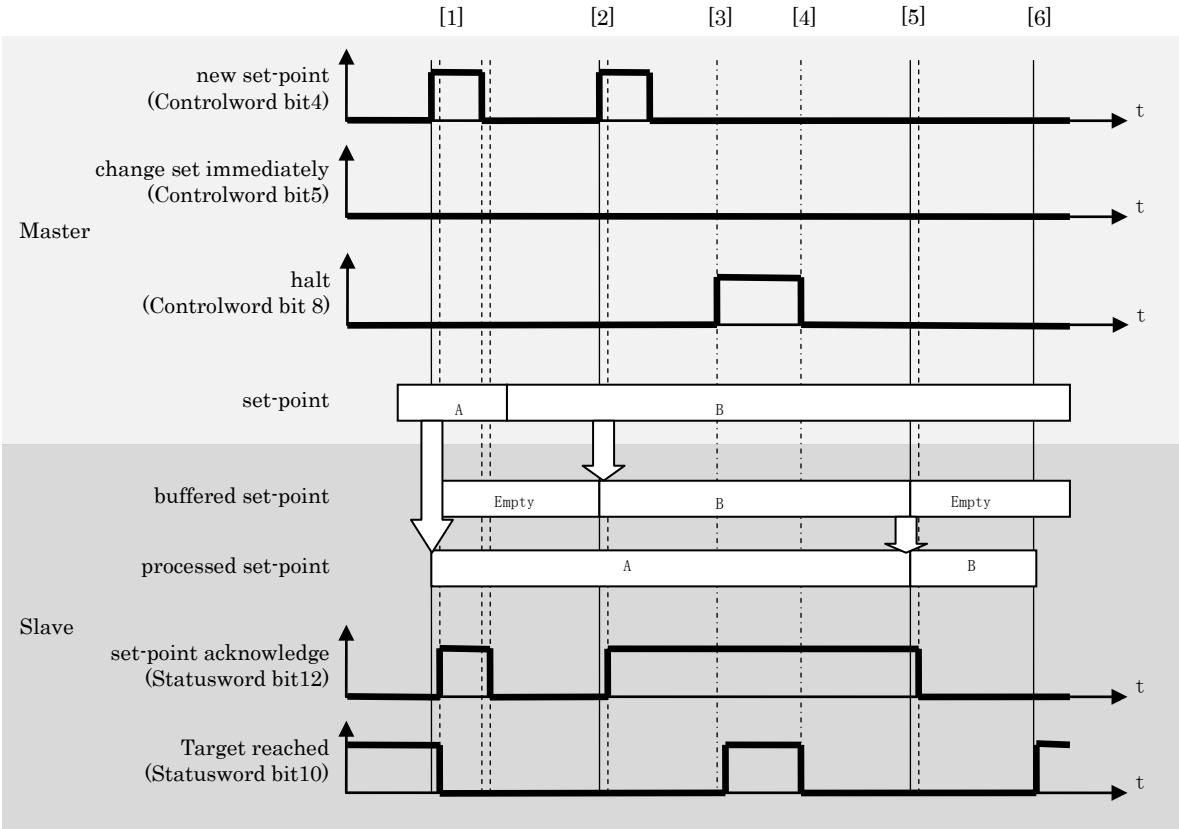

[1] When the set-point is not in process, the new set-point(A) takes effect immediately.
[2] When the set-point is in process, the new set-point(B) is stored if the set-point buffer is empty.
[3] If 1 is set to bit 8 (halt) of 6040h (Controlword) while the first set-point(A) is in process, the first set-point(A) is suspended.
At this time, if deceleration stop is executed and speed reaches 0, bit10 (target reached) for 6041h (Statusword) becomes 1.
[4] After that, when 0 is set to bit 8 (halt) of 6040h (Controlword), the operation for the first set-point is resumed.
At this time, bit10 (target reached) for 6041h (Statusword) becomes 0.
[5] When the operation for the first set-point(A) is completed, the new set-point(B) is processed.
[6] Bit 10 (target reached) of 6041h (Statusword) remains 0 until all set-points are processed.

6-6-3 Cyclic Position Mode (csp mode)

It is a position control mode to operate by creating a command position in the host controller (master) and updating (transmitting) the command position in an interpolation cycle.
Use in DC or SM2 synchronization mode.

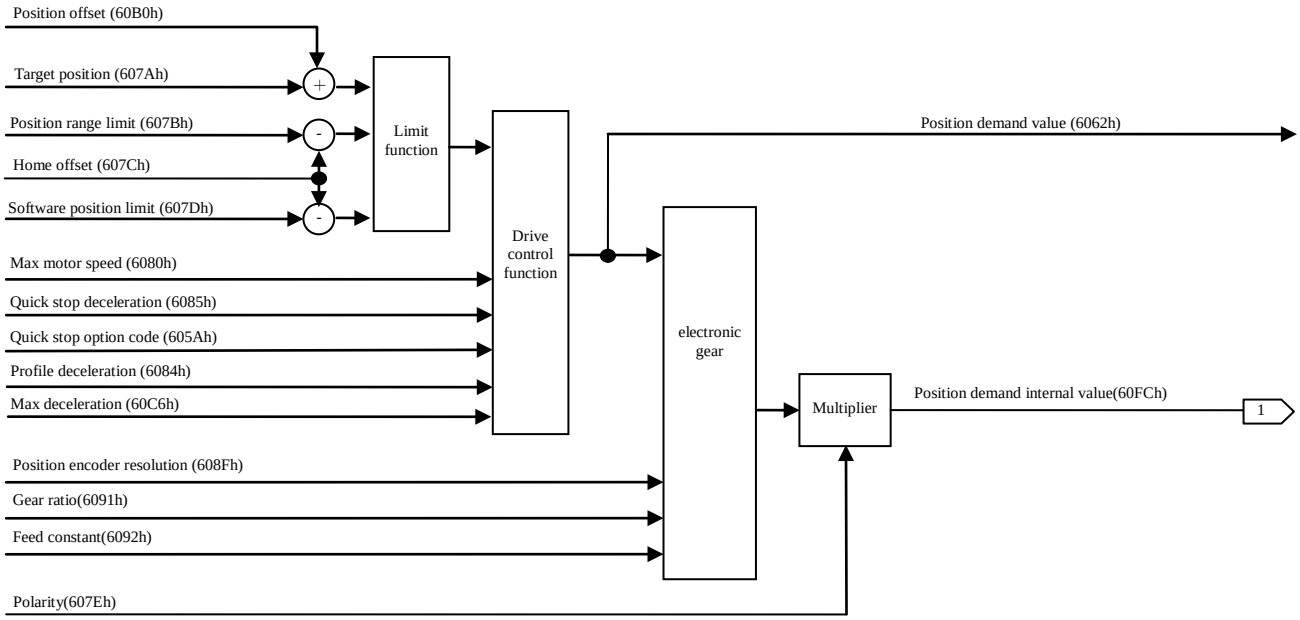

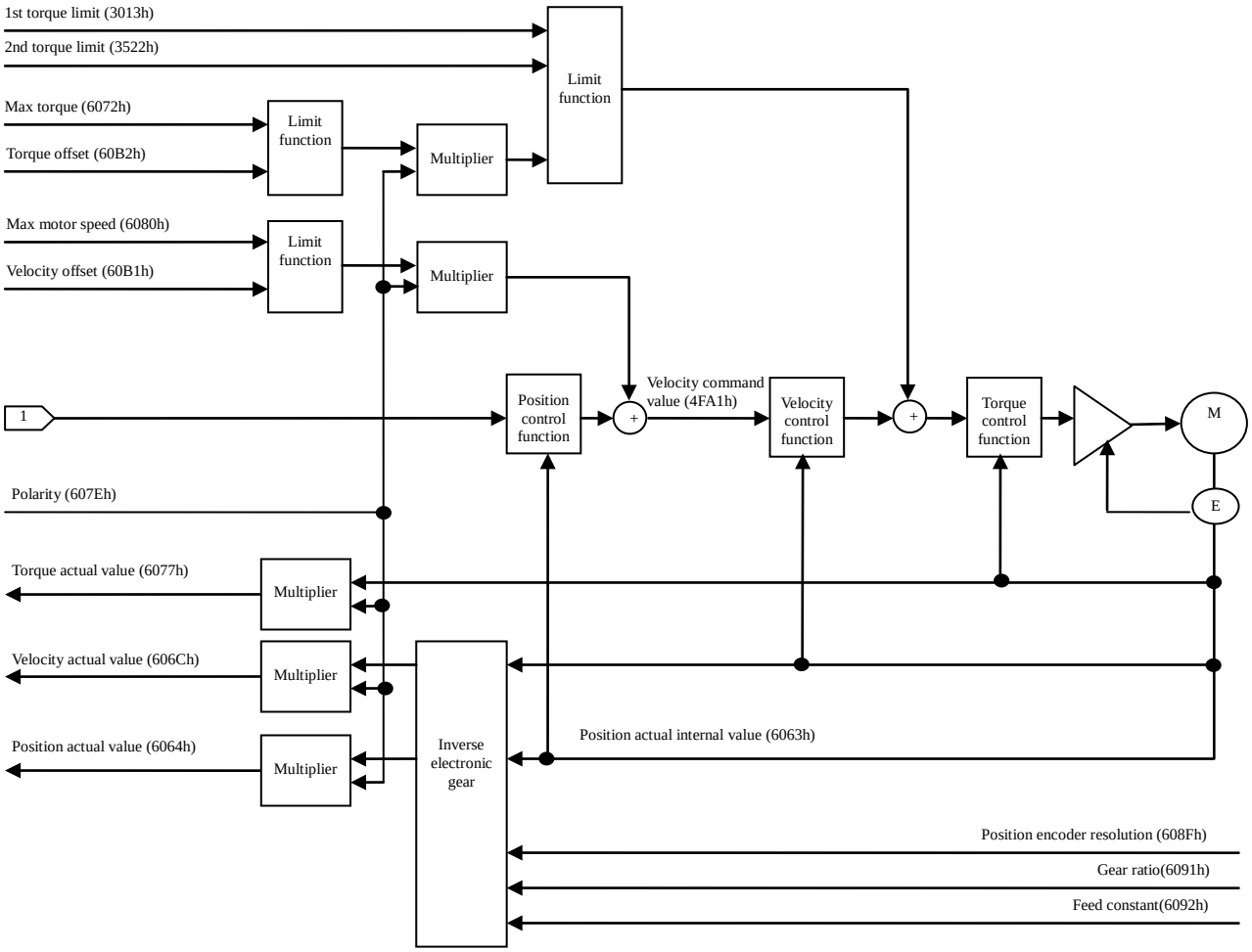

1) Objects related to csp mode (command & setup)

Index	Sub-Index	Name	Units	Range	Data Type	Access	PDO
6040h	00h	Controlword	-	0 - 65535	U16	rw	RxPDO
60B0h	00h	Position offset	Command	-2147483648 – 2147483647	I32	rw	RxPDO
3722h	00h	Communication function extended setup 1	-	-32768 - 32767	I16	rw	No
3724h	00h	Communication function extended setup 3	-	-32768 - 32767	I16	rw	No

- Besides, there are related objects common to the position control.
  For more information, refer to section 6-6-1.

Index	Sub-Index	Name	Units	Range	Data Type	Access	PDO
6072h	00h	Max torque	0.1%	0 - 65535	U16	rw	RxPDO
607Ah	00h	Target position	Command	-2147483648 – 2147483647	I32	rw	RxPDO
607Dh	-	Software position limit	-	-	-	-	-
	00h	Number of entries	-	2	U8	ro	No
	01h	Min position limit	Command	-2147483648 – 2147483647	I32	rw	RxPDO
	02h	Max position limit	Command	-2147483648 – 2147483647	I32	rw	RxPDO
6080h	00h	Max motor speed	r/min	0 - 4294967295	U32	rw	RxPDO
60B1h	00h	Velocity offset	Command/s	-2147483648 - 2147483647	I32	rw	RxPDO
60B2h	00h	Torque offset	0.1%	-32768 - 32767	I16	rw	RxPDO

- There is a related object of common motion as well.
  For information, refer to section 6-9.

Index	Sub-Index	Name	Units	Range	Data Type	Access	PDO
6007h	00h	Abort connection option code	—	0 - 3	I16	rw	No
605Ah	00h	Quick stop option code	—	-2 - 7	I16	rw	No
605Bh	00h	Shutdown option code	—	0 - 1	I16	rw	No
605Ch	00h	Disable operation option code	—	0 - 1	I16	rw	No
605Dh	00h	Halt option code	—	1 - 3	I16	rw	No
605Eh	00h	Fault reaction option code	—	0 - 2	I16	rw	No
607Bh	-	Position range limit	-	-	-	-	-
	00h	Highest sub-index supported	-	2	U8	ro	No
	01h	Min position range limit	Command	-2147483648 – 2147483647	I32	rw	RxPDO
	02h	Max position range limit	Command	-2147483648 – 2147483647	I32	rw	RxPDO
607Ch	00h	Home offset	Command	-2147483648 – 2147483647	I32	rw	RxPDO
607Eh	00h	Polarity	-	0 – 255	U8	rw	No
6084h	00h	Profile deceleration	Command/s^2	0 – 4294967295	U32	rw	RxPDO
6085h	00h	Quick stop deceleration	Command/s^2	0 – 4294967295	U32	rw	RxPDO
608Fh	-	Position encoder resolution	-	-	-	-	-
	00h	Highest sub-index supported	-	2	U8	ro	No
	01h	Encoder increments	pulse	1 – 4294967295	U32	ro	No
	02h	Motor revolutions	r (motor)	1 – 4294967295	U32	ro	No
6091h	-	Gear ratio	-	-	-	-	-
	00h	Number of entries	-	2	U8	ro	No
	01h	Motor revolutions	r (motor)	1 – 4294967295	U32	rw	No
	02h	Shaft revolutions	r (shaft)	1 – 4294967295	U32	rw	No
6092h	-	Feed constant	-	-	-	-	-
	00h	Highest sub-index supported	-	2	U8	ro	No
	01h	Feed	Command	1 – 4294967295	U32	rw	No
	02h	Shaft revolutions	r (shaft)	1 – 4294967295	U32	rw	No
60B8h	00h	Touch probe function	-	0 - 65535	U16	rw	RxPDO
60C2h	-	Interpolation time period	-	-	-	-	-
	00h	Highest sub-index supported	-	2	U8	ro	No
	01h	Interpolation time period value	-	0 - 255	U8	rw	No
	02h	Interpolation time index	-	-128 – 63	I8	rw	No
60FEh	-	Digital outputs	-	-	-	-	-
	00h	Number of entries	-	2	U8	ro	No
	01h	Physical outputs	-	0 - 4294967295	U32	rw	RxPDO
	02h	Bit mask	-	0 - 4294967295	U32	rw	RxPDO

- Controlword (6040h) <Functions in csp mode>

Index	Sub-Index	Name / Description	Units	Range	Data Type	Access	PDO	Op-mode	EEPROM
6040h	00h	Controlword	-	0 - 65535	U16	rw	RxPDO	ALL	No

• Set a command to a servo driver including the PDS state transition.

Bit information details

15 - 10	9	8	7	6	5	4	3	2	1	0
r	oms	h	fr	oms			eo	qs	ev	so
	r			r	r	r				

r = reserved (not supported)
oms = operation mode specific (control mode dependent bit)
h = halt
fr = fault reset
eo = enable operation
qs = quick stop
ev = enable voltage
so = switch on

* Note: The csp mode does not use the oms bit.

- Position system

Index	Sub-Index	Name / Description	Units	Range	Data Type	Access	PDO	Op-mode	EEPROM
60B0h	00h	Position offset	Command	-2147483648 - 2147483647	I32	rw	RxPDO	csp	Yes

• Set the offset of the position command.

- Other

Index	Sub-Index	Name / Description	Units	Range	Data Type	Access	PDO	Op-mode	EEPROM
3722h	00h	Communication function extended setup 1	—	-32768 – 32767	I16	rw	No	ALL	Yes

bit5: 6080h(Max motor speed) on csp mode(Amount of change saturation function of command position)
0: Invalid 1: Valid

Index	Sub-Index	Name / Description	Units	Range	Data Type	Access	PDO	Op-mode	EEPROM
3724h	00h	Communication function extended setup 3	—	-32768 - 32767	I16	rw	No	ALL	Yes

bit11: The setting condition that 6041h bit12 (drive follows command value) will be 0 is changed.
0 : Limiting torque and speed limit (only cst) is included.
1 : Limiting torque and speed limit (only cst) is not included.

2) Objects related to csp mode (monitoring)

Index	Sub-Index	Name	Units	Range	Data Type	Access	PDO
6041h	00h	Statusword	-	0 - 65535	U16	ro	TxPDO

- Besides, there are related objects common to the position control.
  For more information, refer to section 6-6-1.

Index	Sub-Index	Name	Units	Range	Data Type	Access	PDO
6062h	00h	Position demand value	Command	-2147483648 - 2147483647	I32	ro	TxPDO
6063h	00h	Position actual internal value	pulse	-2147483648 - 2147483647	I32	ro	TxPDO
6064h	00h	Position actual value	Command	-2147483648 - 2147483647	I32	ro	TxPDO
6065h	00h	Following error window	Command	0 - 4294967295	U32	rw	TxPDO
6066h	00h	Following error time out	1ms	0 - 65535	U16	rw	TxPDO
6069h	00h	Velocity sensor actual value	-	-2147483648 - 2147483647	I32	ro	RxPDO
606Ch	00h	Velocity actual value	Command/s	-2147483648 - 2147483647	I32	ro	TxPDO
6074h	00h	Torque demand	0.1%	-32768 - 32767	I16	ro	TxPDO
6076h	00h	Motor rated torque	mN･m	0 - 4294967295	U32	ro	TxPDO
6077h	00h	Torque actual value	0.1%	-32768 - 32767	I16	ro	TxPDO
60F4h	00h	Following error actual value	Command	-2147483648 - 2147483647	I32	ro	TxPDO
60FAh	00h	Control effort	Command/s	-2147483648 - 2147483647	I32	ro	TxPDO
60FCh	00h	Position demand internal value	pulse	-2147483648 - 2147483647	I32	ro	TxPDO

- There is a related object of common motion as well.
  For information, refer to Chapter 6-9.

Index	Sub-Index	Name	Units	Range	Data Type	Access	PDO
603Fh	00h	Error code	-	0 - 65535	U16	ro	TxPDO
60B9h	00h	Touch probe status	-	0 - 65535	U16	ro	TxPDO
60BAh	00h	Touch probe pos1 pos value	Command	-2147483648 - 2147483647	I32	ro	TxPDO
60BBh	00h	Touch probe pos1 neg value	Command	-2147483648 - 2147483647	I32	ro	TxPDO
60BCh	00h	Touch probe pos2 pos value	Command	-2147483648 - 2147483647	I32	ro	TxPDO
60BDh	00h	Touch probe pos2 neg value	Command	-2147483648 - 2147483647	I32	ro	TxPDO
60FDh	00h	Digital inputs	-	0 - 4294967295	U32	ro	TxPDO

- Statusword (6041h) <Functions in csp mode>

Index	Sub-Index	Name / Description	Units	Range	Data Type	Access	PDO	Op-mode	EEPROM
6041h	00h	Statusword	-	0-65535	U16	ro	TxPDO	ALL	No

• Displays the servo driver state.

Bit information details

15 - 14	13	12	11	10	9	8	7	6	5	4	3	2	1	0
	oms			oms										
r	following error	drive follows command value	ila	r	rm	r	w	sod	qs	ve	f	oe	so	rtso

r = reserved (not supported)

oms = operation mode specific (control mode dependent bit)

ila = internal limit active

rm = remote

w = warning

sod = switch on disabled

qs = quick stop

ve = voltage enabled

f = fault

oe = operation enabled

so = switched on

rtso = ready to switch on

bit13,12,10(operation mode specific):

Bit	Name	Value	Definition
10	reserved	-	Not used
12	Drive follows command value	0	Operation is not performed according to the target position. *1)
		1	Operation is performed according to the target position. *1)
13	following error	-	Please refer to 3) of Section 6-6-1.

*1) “Operation is performed according to the target position” refers to cases where the following conditions are all satisfied

- PDS state is Operation enabled
- While not in deceleration (Halt, POT/NOT, Quickstop, Shutdown, Disable operation, Fault and software limit)
- While not in Halt status
- POT not detected when a positive direction operation command is in process or NOT is not detected when a negative direction operation command is in process.
- Torque limit has not occurred(Valid only when this condition 3724h-bit11 is 0)
- When a positive direction operation command is in process, the actual position or the commanded position is within the range set by 607Dh-02h.
- When a negative direction operation command is in process, the actual position or the commanded position is within the range set by 607Dh-01h.

Index	Sub-Index	Name / Description	Units	Range	Data Type	Access	PDO	Op-mode	EEPROM
3724h	00h	Communication function extended setup 3	—	-32768 - 32767	I16	rw	No	ALL	Yes

bit11: The setting condition that 6041h bit12 (drive follows command value) will be 0 is changed.

0 : Limiting torque and speed limit (only cst) is included.

1 : Limiting torque and speed limit (only cst) is not included.

3) Operations of csp mode

- Motion profile (trajectory) generation is done in the master rather than the slave in cyclic position control mode.

- Target position is the sum of 60B0h (Position offset) and 607Ah (Target position), and is interpreted as an absolute position.

- For the operation command update (transmission), do input when approx. 100 ms has elapsed after the servo ON(Operation enabled).

- 60C2h (Interpolation time period) indicates the cycle update two objects 607Ah (Target Position) and 60B0h (Position offset).This value is set to the same period 1C32h-02h (Cycle time).
  As for the host controller (master), be sure to update the target position in the cycle of 60C2h (Interpolation time period).

- In the servo-off state, configure the master process so as to follow 6064h (Position actual value) the additional value of 60B0h (Position offset) and 607Ah (Target Position).
  When it did not follow, because if the motor is moving, such as external force during servo-off, the operation is trying to return to the target position that was inputted at the time of servo-on next time, it is very dangerous. Configure the similar following process when switching to csp control mode from other control modes than csp control mode as well.

Bad example: Command position at servo-off (Command position is not set with actual position)

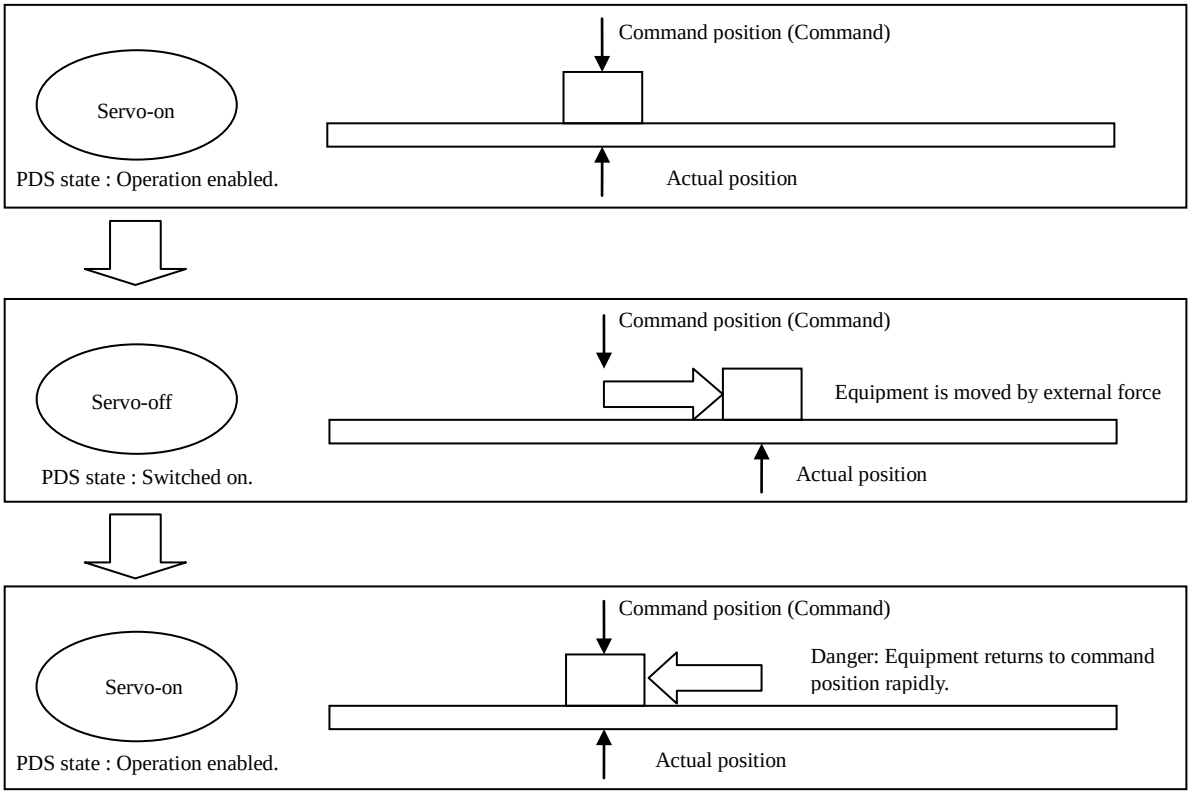

4) Calibration process on the occurrence of communication error

If a communication error occurred during operation and 607Ah (Target Position) could not be restored properly, the target position is presumed and calibration is performed.

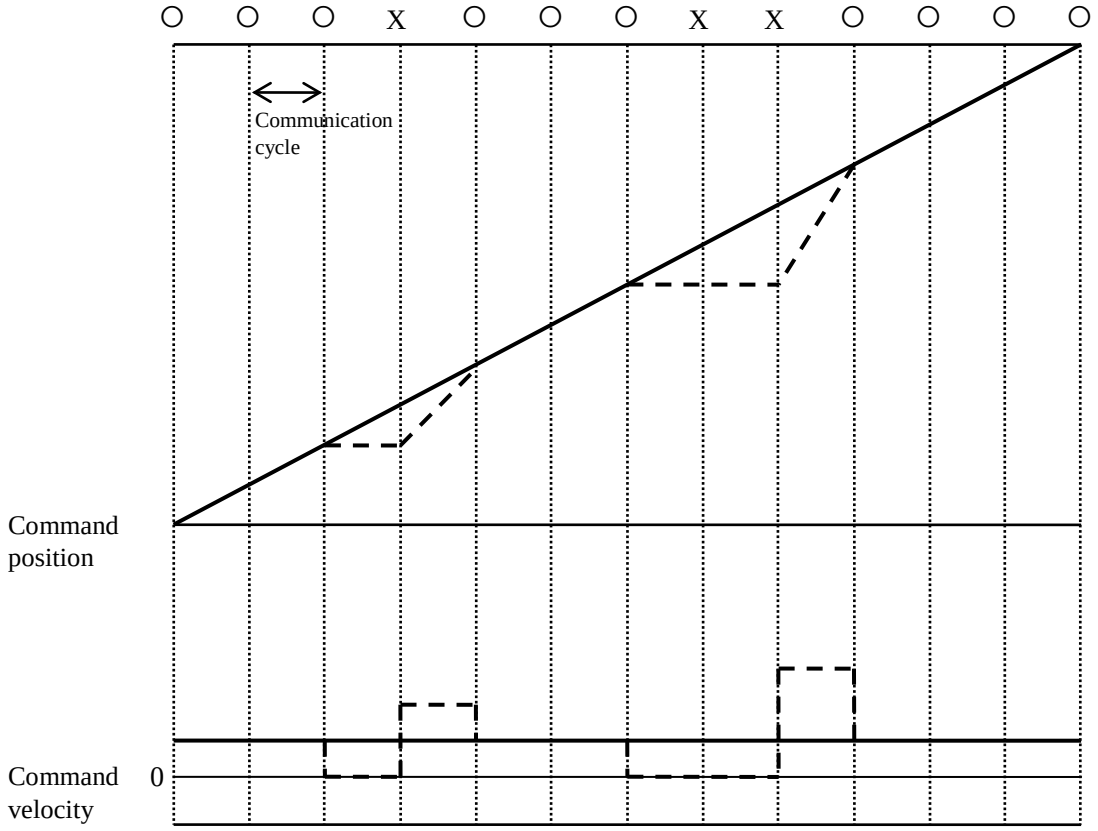

Solid line: After command calibration, Dashed line: Before command calibration
O: Communication successful, X: Communication error

5) Amount of change saturation function of command position

This is to prevent the occurrence of Err27.4 by an unusual command position value and the ability to saturate the amount of change in the command position converted from 6080h (Max motor speed) for the purpose of stabilizing the behavior of motor.

• Scope

This function following control mode only supports.

	Conditions that command position saturation function to operate
Control mode	Position control mode(csp)

• Related objects

Index	Sub-Index	Name / Description	Units	Range	Data Type	Access	PDO	Op-mode	EEPROM
3722h	00h	Communication function extended setup 1	—	-32768 - 32767	I16	rw	No	ALL	Yes
		bit5:6080h(Max motor speed) on csp mode(Amount of change saturation function of command position) 0: Invalid on csp 1: Valid on csp							
6080h	00h	Max motor speed	r/min	0 – 4294967295	U32	rw	RxPDO	ALL	Yes *1)
		• Set the maximum speed of motor. • The maximum value is limited by the maximum speed read from the motor in internal processing. • At tq or cst, the speed is limited with the setting value of this object. *1) In the first edition of the software version (Ver1.01), it is not supported for backup to EEPROM. The maximum speed read from the motor is set when the control power is turned on. In the enhanced software version 1 (Ver1.02) and later, it is supported for backup to EEPROM. The value stored in EEPROM is set when the control power is turned on.							

Note)

・ When this function is valid(3722h bit5=1), it suppress Err27.4 by dividing a command position even if the command position is abnormal.

・ When this function is valid(3722h bit5=1) and 6080h=0, the amount of change in the command position is limited to 0 and the motor does not move.
And bit11(internal limit active) of 6041h(Statusword) does not become 1.

• Example(Interpolation cycle=125us)

If the change amount of the target position(607Ah(Target position) + 60B0h(Position offset)) exceeds the command limit value(a threshold value for Err27.4 occurrence) from the host controller saturated with limit values obtained by converting the command position change per interpolation cycle from 6080h.
This prevents the occurrence of Err27.4 even if the host controller sends an unusual command position, the operation is stabilized.

<During invalid amount of change saturation function of command position>

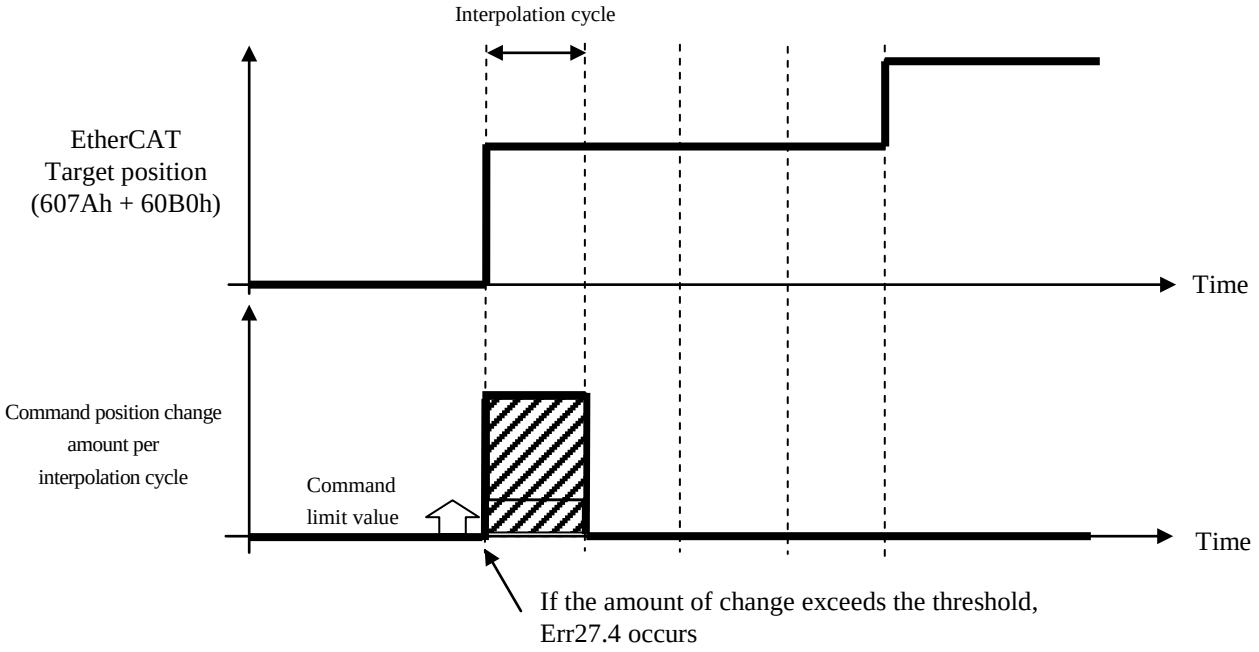

<During valid amount of change saturation function of command position>

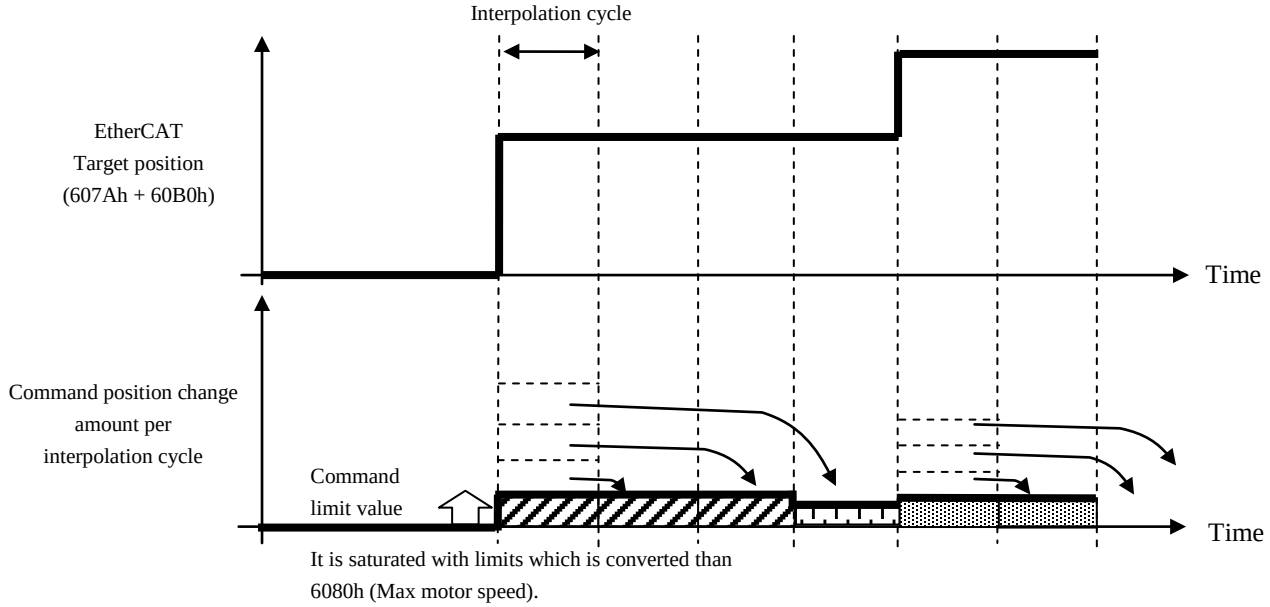

6-6-4 Interpolating Position Mode (ip mode) (Not supported)

This mode is not supported by this software version. Do not set 6060h (Modes of operation) to 7.

It is a position control mode to operate by creating a command position in the host controller (master) and updating the command position buffered by buffering it to the servo driver inside in the communication cycle in an interpolation time.

6-6-5 Homing Position Mode (hm mode)

It is a position control mode to execute an origin return operation by designating the origin return method, operation speed, etc. and creating a position command in the servo driver.

If it is used in the incremental mode, it is necessary to execute the origin return operation before executing the positioning operation after the control power is turned on.

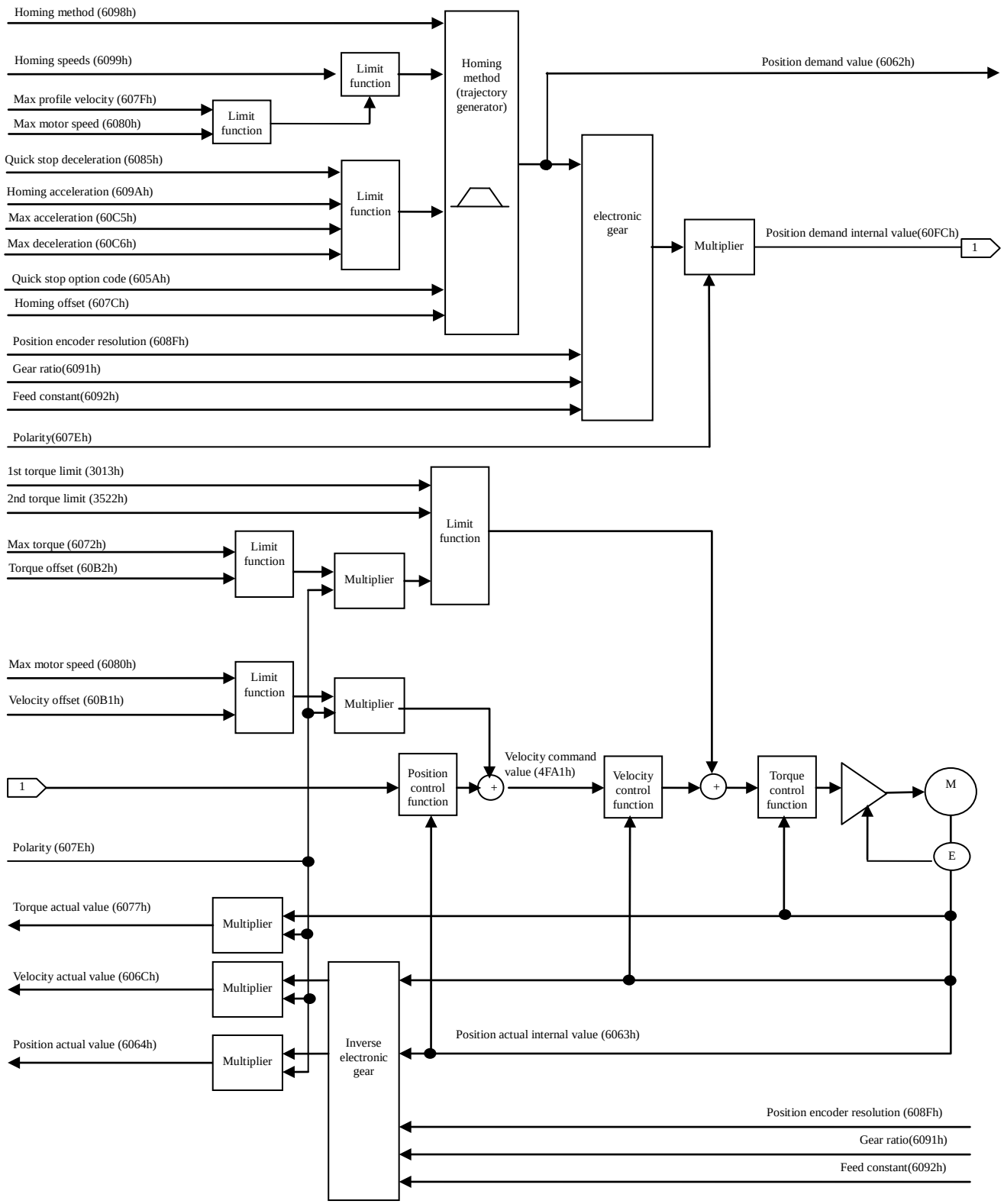

1) Objects related to hm mode (command & setup)

Index	Sub-Index	Name	Units	Range	Data Type	Access	PDO
6040h	00h	Controlword	-	0 - 65535	U16	rw	RxPDO
6098h	00h	Homing method	-	-128 - 127	I8	rw	RxPDO
6099h	-	Homing speeds	-	-	-	-	-
	00h	Number of entries	-	2	U8	ro	No
	01h	Speed during search for switch	Command/s	0 - 4294967295	U32	rw	RxPDO
	02h	Speed during search for zero	Command/s	0 - 4294967295	U32	rw	RxPDO
609Ah	00h	Homing acceleration	Command/s^2	0 - 4294967295	U32	rw	RxPDO

- Besides, there are related objects common to the position control.
  For more information, refer to section 6-6-1.

Index	Sub-Index	Name	Units	Range	Data Type	Access	PDO
6072h	00h	Max torque	0.1%	0 - 65535	U16	rw	RxPDO
607Fh	00h	Max profile velocity	Command/s	0 - 4294967295	U32	rw	RxPDO
6080h	00h	Max motor speed	r/min	0 - 4294967295	U32	rw	RxPDO
60B1h	00h	Velocity offset	Command/s	-2147483648 - 2147483647	I32	rw	RxPDO
60B2h	00h	Torque offset	0.1%	-32768 - 32767	I16	rw	RxPDO
60C5h	00h	Max acceleration	Command/s^2	0 - 4294967295	U32	rw	RxPDO
60C6h	00h	Max deceleration	Command/s^2	0 - 4294967295	U32	rw	RxPDO

- There is a related object of common motion as well.
  For information, refer to Chapter 6-9.

Index	Sub-Index	Name	Units	Range	Data Type	Access	PDO
6007h	00h	Abort connection option code	-	0 - 3	I16	rw	No
605Ah	00h	Quick stop option code	-	-2 - 7	I16	rw	No
605Bh	00h	Shutdown option code	-	0 - 1	I16	rw	No
605Ch	00h	Disable operation option code	-	0 - 1	I16	rw	No
605Dh	00h	Halt option code	-	1 - 3	I16	rw	No
605Eh	00h	Fault reaction option code	-	0 - 2	I16	rw	No
607Bh	-	Position range limit	-	-	-	-	-
	00h	Highest sub-index supported	-	2	U8	ro	No
	01h	Min position range limit	Command	-2147483648 – 2147483647	I32	rw	RxPDO
	02h	Max position range limit	Command	-2147483648 – 2147483647	I32	rw	RxPDO
607Ch	00h	Home offset	Command	-2147483648 – 2147483647	I32	rw	RxPDO
607Eh	00h	Polarity	-	0 – 255	U8	rw	No
6085h	00h	Quick stop deceleration	Command/s^2	0 – 4294967295	U32	rw	RxPDO
608Fh	-	Position encoder resolution	-	-	-	-	-
	00h	Highest sub-index supported	-	2	U8	ro	No
	01h	Encoder increments	pulse	1 – 4294967295	U32	ro	No
	02h	Motor revolutions	r (motor)	1 – 4294967295	U32	ro	No
6091h	-	Gear ratio	-	-	-	-	-
	00h	Number of entries	-	2	U8	ro	No
	01h	Motor revolutions	r (motor)	1 – 4294967295	U32	rw	No
	02h	Shaft revolutions	r (shaft)	1 – 4294967295	U32	rw	No
6092h	-	Feed constant	-	-	-	-	-
	00h	Highest sub-index supported	-	2	U8	ro	No
	01h	Feed	Command	1 – 4294967295	U32	rw	No
	02h	Shaft revolutions	r (shaft)	1 – 4294967295	U32	rw	No
60B8h	00h	Touch probe function	-	0 - 65535	U16	rw	RxPDO
60FEh	-	Digital outputs	-	-	-	-	-
	00h	Number of entries	-	2	U8	ro	No
	01h	Physical outputs	-	0 - 4294967295	U32	rw	RxPDO
	02h	Bit mask	-	0 - 4294967295	U32	rw	RxPDO

- Controlword (6040h) <Functions in hm mode>

Index	Sub-Index	Name / Description	Units	Range	Data Type	Access	PDO	Op-mode	EEPROM
6040h	00h	Controlword	-	0 - 65535	U16	rw	RxPDO	ALL	No

- Set a command to a servo driver including the PDS state transition.

Bit information details

15 - 10	9	8	7	6	5	4	3	2	1	0
r	oms r	h	fr	oms r	r	start homing	eo	qs	ev	so

r	= reserved (not supported)	fr	= fault reset
oms	= operation mode specific (control mode dependent bit)	eo	= enable operation
		qs	= quick stop
		ev	= enable voltage
h	= halt	so	= switch on

bit9,6-4(operation mode specific):

Bit	Name	Value	Definition
4	start homing	0 -> 1	The homing operation starts.
5	(reserved)	-	Not used
6	(reserved)	-	Not used
9	(reserved)	-	Not used

When bit4 (start homing) of 6040h (Controlword) is started, parameters related to the homing position control mode (hm) (homing method, velocity, acceleration, deceleration, etc.) are stored, and the operation is started.

Even if a new return to home position operation is started during the return to home position operation (bit4 for 6040h is started up again), the new return to home position operation will be ignored.

- Homing method (6098h)

Index	Sub-Index	Name / Description	Units	Range	Data Type	Access	PDO	Op-mode	EEPROM
6098h	00h	Homing method	-	-128 - 127	I8	rw	No	hm	Yes

- Set the homing method.

Value	Definition
0	No homing method assigned
1	-Ve LS & Index Pulse
2	+Ve LS & Index Pulse
3	+Ve HS & Index Pulse direction reversal
4	+Ve HS & Index Pulse no direction change
5	-Ve HS & Index Pulse direction reversal
6	-Ve HS & Index Pulse no direction change
7	on +Ve HS -Index Pulse
8	on +Ve HS +Index Pulse
9	After +ve HS reverse +Index Pulse
10	After +ve HS +Index Pulse
11	on -Ve HS -Index Pulse
12	on -Ve HS +Index Pulse
13	After -ve HS reverse +Index Pulse
14	After -ve HS +Index Pulse
15	Reserved
16	Reserved
17	Same as 1 without Index Pulse
18	Same as 2 without Index Pulse
19	Same as 3 without Index Pulse
20	Same as 4 without Index Pulse
21	Same as 5 without Index Pulse
22	Same as 6 without Index Pulse
23	Same as 7 without Index Pulse
24	Same as 8 without Index Pulse
25	Same as 9 without Index Pulse
26	Same as 10 without Index Pulse
27	Same as 11 without Index Pulse
28	Same as 12 without Index Pulse
29	Same as 13 without Index Pulse
30	Same as 14 without Index Pulse
33	On Index Pulse +Ve direction
34	On Index Pulse -Ve direction
35	Current position = home
37	Current position = home

+Ve : positive direction LS : Limit switch
- Ve : negative direction HS: Home switch

Note:
- When the Homing operation starts with other than setting values supported by 6098h (Homing method), an Homing error occurs (bits13 of 6041h(Status word) is 1).
- The Homing method cannot be changed while the homing position control mode (hm) is in process. To change the Homing method, stop the motor (stop the hm mode).

- Homing speeds (6099h)

Index	Sub-Index	Name / Description	Units	Range	Data Type	Access	PDO	Op-mode	EEPROM
6099h		Homing speeds	-	-	-	-	-	-	-
		• Set the velocity during the Homing mode (hm).							
	00h	Number of entries	-	2	U8	ro	No	hm	No
		• Displays the number of sub-indexes for 6099h (Homing speeds).							
	01h	Speed during search for switch	Command/s	0 - 4294967295	U32	rw	RxPDO	hm	Yes
		• Set the operation velocity until the Switch signal is detected. • The maximum value is limited by the internal processing to the smallest of 60F7h (Max profile velocity) or 6080h (Max motor speed) or 2147483647.							
	02h	Speed during search for zero	Command/s	0 - 4294967295	U32	rw	RxPDO	hm	Yes
		• Set the operation velocity until the position is detected homing. If the home detection position is the edge of the Switch signal, set this value as small as possible. • The maximum value is limited by the internal processing to the smallest of 60F7h (Max profile velocity) or 6080h (Max motor speed) or 2147483647.							

Note: For more information about applying for each speed, refer to the example of the operation of each Homing method.

- Homing acceleration (609Ah)

Index	Sub-Index	Name / Description	Units	Range	Data Type	Access	PDO	Op-mode	EEPROM
609Ah	00h	Homing acceleration	Command/s^2	0 - 4294967295	U32	rw	RxPDO	hm	Yes
		• Set the acceleration and deceleration during the Homing mode (hm). • The deceleration of homing operation are common in this object. • At the final stop of each Homing method (when the homing position is detected), the servo lock is carried out for the stopping, instead of using the preset value of this object. • If it is set to 0, internal processing is treated as 1.							

2) Objects related to hm mode (monitoring)

Index	Sub-Index	Name	Units	Range	Data Type	Access	PDO
6041h	00h	Statusword	-	0 - 65535	U16	ro	TxPDO
60E3h	-	Supported homing method	-	-	-	-	-
	00h	Number of entries	-	1 - 254	U8	ro	No
	01h	1st supported homing method	-	0 - 32767	U16	ro	No
	to						
	20h	32nd supported homing method	-	0 - 32767	U16	ro	No

- Besides, there are related objects common to the position control.
  For more information, refer to section 6-6-1.

Index	Sub-Index	Name	Units	Range	Data Type	Access	PDO
6062h	00h	Position demand value	Command	-2147483648 - 2147483647	I32	ro	TxPDO
6063h	00h	Position actual internal value	pulse	-2147483648 - 2147483647	I32	ro	TxPDO
6064h	00h	Position actual value	Command	-2147483648 - 2147483647	I32	ro	TxPDO
6069h	00h	Velocity sensor actual value	-	-2147483648 - 2147483647	I32	ro	TxPDO
606Ch	00h	Velocity actual value	Command/s	-2147483648 - 2147483647	I32	ro	TxPDO
6074h	00h	Torque demand	0.1%	-32768 - 32767	I16	ro	TxPDO
6076h	00h	Motor rated torque	mN･m	0 - 4294967295	U32	ro	TxPDO
6077h	00h	Torque actual value	0.1%	-32768 - 32767	I16	ro	TxPDO
60F4h	00h	Following error actual value	Command	-2147483648 - 2147483647	I32	ro	TxPDO
60FAh	00h	Control effort	Command/s	-2147483648 - 2147483647	I32	ro	TxPDO
60FCh	00h	Position demand internal value	pulse	-2147483648 - 2147483647	I32	ro	TxPDO

- There is a related object of common motion as well.
  For information, refer to section 6-9.

Index	Sub-Index	Name	Units	Range	Data Type	Access	PDO
603Fh	00h	Error code	-	0 - 65535	U16	ro	TxPDO
60B9h	00h	Touch probe status	-	0 - 65535	U16	ro	TxPDO
60BAh	00h	Touch probe pos1 pos value	Command	-2147483648 – 2147483647	I32	ro	TxPDO
60BBh	00h	Touch probe pos1 neg value	Command	-2147483648 – 2147483647	I32	ro	TxPDO
60BCh	00h	Touch probe pos2 pos value	Command	-2147483648 – 2147483647	I32	ro	TxPDO
60BDh	00h	Touch probe pos2 neg value	Command	-2147483648 – 2147483647	I32	ro	TxPDO
60FDh	00h	Digital inputs	-	0 - 4294967295	U32	ro	TxPDO

- Statusword (6041h) <Functions in hm mode>

Index	Sub-Index	Name / Description	Units	Range	Data Type	Access	PDO	Op-mode	EEPROM
6041h	00h	Statusword	-	0 - 65535	U16	ro	TxPDO	ALL	No

- Displays the servo driver state.

Bit information details

15 - 14	13	12	11	10	9	8	7	6	5	4	3	2	1	0
	oms			oms										
r	homing error	homing attained	ila	target reached	rm	r	w	sod	qs	ve	f	oe	so	rtso

r = reserved (not supported)
oms = operation mode specific (control mode dependent bit)
ila = internal limit active
rm = remote
w = warning
sod = switch on disabled
qs = quick stop
ve = voltage enabled
f = fault
oe = operation enabled
so = switched on
rtso = ready to switch on

bit13,12,10(operation mode specific):

bit	Name	Value	Definition
10	target reached	0	In operation
		1	Stopped state
12	homing attained	0	The homing operation is incomplete *1)
		1	The homing operation complete to be performed successfully *2)
13	homing error	0	A homing error does not occur (normal)
		1	A homing error occurs (The homing operation is not performed successfully)

The combination of the bits 13, 12 and 10 is as follows:

bit 13	bit 12 *2)	bit 10	Definition
0	0	0	Homing
0	0	1	The homing operation is suspended or not started
0	1	0	The homing operation is completed, but the operation does not arrive at the target position
0	1	1	The homing operation is completed successfully
1	0	0	The homing error is detected but still working
1	0	1	The homing error is detected and stopped

*1) bit12 (homing attained) becomes 0 in the following cases.
- When control power is turned on
- When the ESM status has changed from Init to PreOp
- When the return to home position operation is started
  Even when Homing operation is started without motor operation(Method35, Method37), homing attained becomes 0. However, the time of 0 is a short time(about 2ms).
- When operations on PANATERM (test run function, FFT, fit gain function, Z phase search function and pin assignment setting) are finished. (If 3799h bit0 is 1)
- When Err27.4 (Command error protection) occurs (not spported by the first edition Ver1.01)

*2) In the absolute mode, bit12 (homing attained) is always 1.
In hm mode, bit12 (homing attained) become 0 when the multi-turn data clear run.
After the multi-turn data clear completion, bit12 (homing attained) will return to 1.

- Supported homing method (60E3h)

Index	Sub-Index	Name / Description	Units	Range	Data Type	Access	PDO	Op-mode	EEPROM
60E3h		Supported homing method	-	-	-	-	-	-	-
		• Displays the homing methods supported.							
	00h	Number of entries	-	32	U8	ro	No	hm	No
		• Displays the number of homing method that it supports for 60E3h (Supported homing method).							
	01h	1st supported homing method	-	0 - 32767	U16	ro	No	hm	No
		• Displays the first homing method supported.							
	to								
	20h	32nd supported homing method	-	0 - 32767	U16	ro	No	hm	No
		• Displays the 32nd homing method supported.							

Index	Sub-Index	bit 15 to 8	bit 7 to 0
		Reserved	Supported Homing method *1)
60E3h	01h	0	1
	02h	0	2
	03h	0	3
	04h	0	4
	05h	0	5
	06h	0	6
	07h	0	7
	08h	0	8
	09h	0	9
	0Ah	0	10
	0Bh	0	11
	0Ch	0	12
	0Dh	0	13
	0Eh	0	14
	0Fh	0	17
	10h	0	18
	11h	0	19
	12h	0	20
	13h	0	21
	14h	0	22
	15h	0	23
	16h	0	24
	17h	0	25
	18h	0	26
	19h	0	27
	1Ah	0	28
	1Bh	0	29
	1Ch	0	30
	1Dh	0	33
	1Eh	0	34
	1Fh	0	35
	20h	0	37

*1) The relation between Homing method and values refer to 6098h(Homing method).

3) Operations of hm mode (Homing operation)

When using incremental mode, perform the homing operation because it is necessary to initialize position information before starting normal operation.

- After the detection of the home position, initialize(Preset) the following object on the basis of its position.
  6062h(Position demand value) = 6064h(Position actual value) = 607Ch(Home offset)
  6063h(Position actual internal value) = 60FCh(Position demand internal value) = 0

- If homing operation is performed, position information will be initialized(preset).
  Therefore, it is necessary to reacquire the data (Touch probe position etc.) acquired to base the old position informations.

- A change that is made to 607Ch (Home offset) during a homing operation will not be reflected in that homing operation.
  It is reflected from the next homing operation (initialization of position information at completion).

- If the home detection position is the edge of Switch signal(HOME, POT and NOT), assign to SI5, SI6 and SI7 to be each latch correction pin.
  If allocation is incorrect, Homing error will occur.
  For more information, refer to Basic function specifications of the Technical document (SX-DSV03241).

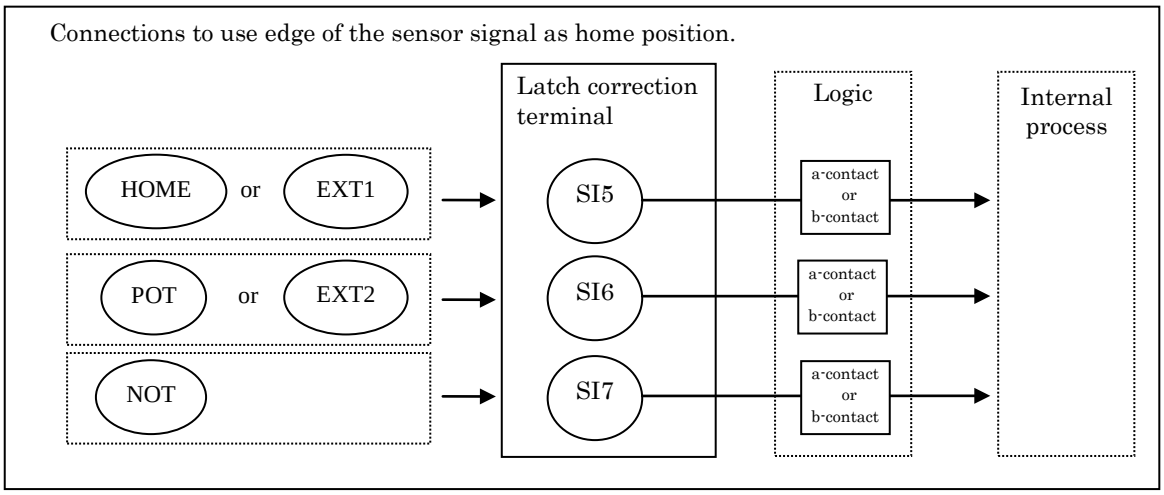

- The following terms that indicates in the figure each Method described below indicates the following content.

Index pulse	Z-phase signal of encoder(Set at full-closed control is external scale)
Home switch	Logic signal state of Origin proximity input(HOME)
Positive limit	Logic signal state of Positive direction over-travel inhibition input(POT)
Negative limit	Logic signal state of Negative direction over-travel inhibition input(NOT)

- For the operation command update (transmission), do input when approx. 100 ms has elapsed after the servo ON(Operation enabled).

- The sequence of the hm control mode is shown below.

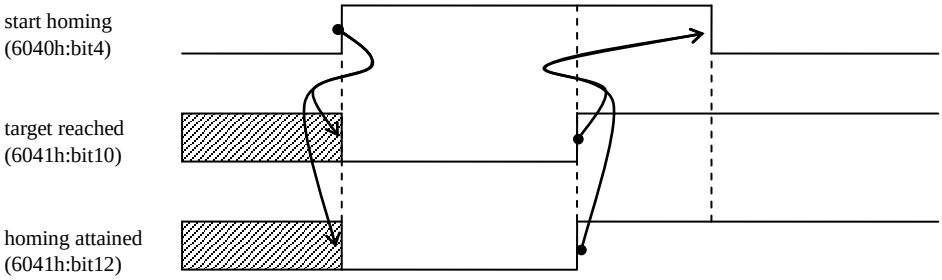

- If you perform a homing operation using the Index pulse, it is recommended that you set the 3722h(Communication function extended setup 1) bit7(In Z phase homing Over-travel inhibit input setup) to 1. In the above setting, Index pulse movement amount becomes abnormal operation to the detection position, and to generate Err94.3 the (Home position return error protection 2) detects the inhibit input you can do the protection.

- If return to origin is cancelled by halt and such from the host device during a homing operation between origin detection and return to origin completion, Err27.7 (Position information initialization error protection) occurs. (Not supported by the first edition Ver1.01)

- Homing return speed limit function
  When the home position detection, the motor returns overshoot distance (Homing return).
  At this time, in the case of high response setting to position command and high speed (mode of 2 degree of freedom control, etc), if run homing return, the sound may occur when the homing is completed.
  When the 3722h bit6(Homing return speed limit function enabled) is set to "1", homing return speed limit function is enabled.
  If this function is enabled, homing return speed is limited by the 3793h(Homing return speed limit value).
  The effect of reducing the occurrence of sound is expected.
  For the timing (Attribute) at which bit 6 of 3722h and 3793h setting changes are reflected, refer to "9 Object Dictionary List".
  If this function is enabled, the time to homing completion might extending.
  If this function is disabled, homing return speed is limited by the maximum motor speed that the driver have internally.
  When homing return speed exceeds the 3513h(Over-speed level setup), Err26.0(Over-speed protection) occurs.
  When homing return speed exceeds the 3615h(2nd over-speed level setup), Err26.1(2nd over-speed protection) occurs.

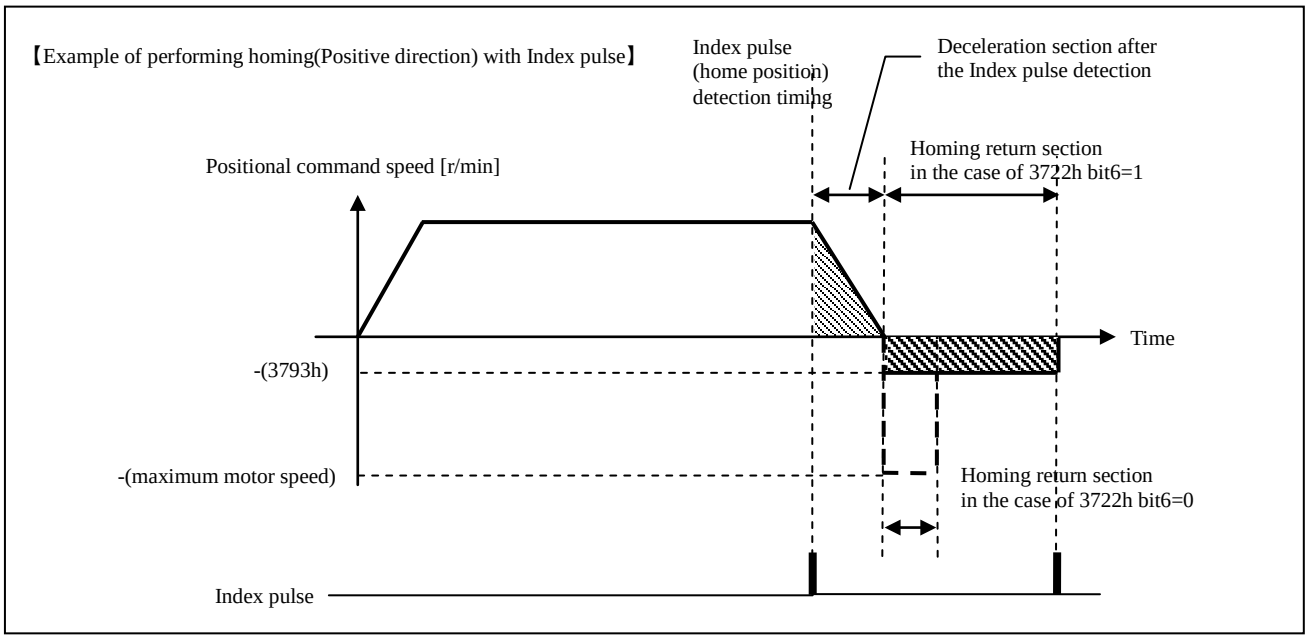

Index	Sub-Index	Name / Description	Units	Range	Data Type	Access	PDO	Op-mode	EEPROM
3722h	00h	Communication function extended setup 1	—	-32768 – 32767	I16	rw	No	ALL	Yes
		bit6：Homing return speed limit function enabled 0：Invalid 1：Valid							
3793h	00h	Homing return speed limit value	r/min	0 – 20000	I16	rw	No	hm	Yes
		Sets the Homing return limit speed. When the set value is less than the internal minimum speed, it is limited by the internal minimum speed. When setting value is greater than the maximum motor speed, it will be limited by the maximum motor speed.							

- Homing error occur conditions

In case of Homing operation, it becomes abnormalities (Homing error = 1) on condition of the following.

Homing Error Conditions	Detail
Started in absolute mode	Homing was started in absolute mode. *2)
Started when operation is not enabled	Homing was started when the PDS status is not in Operation enabled. *2) (excluding Method 35, 37)
Started when target speed is 0	Homing was started when setting values for 6099h-01h or 6099h-02h was 0. *2) Except following - 6099h-01h with Method 35/37 - 6099h-02h with Method 33/34/35/37
Limit switch detects both	In a Homing start-up or during Homing operation, both Limit switch of Positive/Negative was detected. *2)*3)
Penetrate the Limit switch	In the case of a method to reverse Limit switch During deceleration operation after detection for reversal of the rise of the Limit switch, detected a falling edge of the Limit switch
Penetrate the Home switch	In the case of a method to reverse Home switch During deceleration operation after detection for reversal of the rise of the Home switch, detected a falling edge of the Home switch
Installation relation between Home switch and Limit switch is unsuitable.	In the case of a method to reverse Home switch During deceleration operation after detection for reversal of the rise of the Home switch, detected a rising edge of the Limit switch
	In the case of a method to not reverse Limit switch Limit switch is detected during the Home switch search. *1)
Installation relation between Index pulse and Limit switch is unsuitable.	In the case of a method to detect the Index pulse Rising edge of Limit switch is detected during an Index pulse search.
	In the case of a method to not reverse Limit switch Limit switch is detected during the Index pulse search. *1)
Home switch and Limit switch have not been allocated.	HOME, POT and NOT have not been allocated to SI5, SI6, and SI7 respectively.

*1) Homing error is not detected when an operation to get out of the limitation by the limit switch (an operation in the opposite direction of the limited direction) is performed with the limit switch detected at the homing start-up *2).

*2) A homing start-up indicate a timing to change bit4(start homing) of 6040h(Controlword) to 1 from 0.

*3) When 3504h (Over-travel inhibit input setup) = 0, Err38.0 (Over-travel inhibit input protection 1) occurs, instead of a homing error.

- Method 1

  - This Method, if Negative limit switch is inactive, the initial operation direction turns into he negative direction.(An inactive state is shown in the state of low level by a figure)
  - Home detection position is the first Index pulse detection position in the Positive side position of after a Negative limit signal becomes inactive.
    (See figure)
  - When NOT is not assigned, Homing error will occur(Homing error = 1).

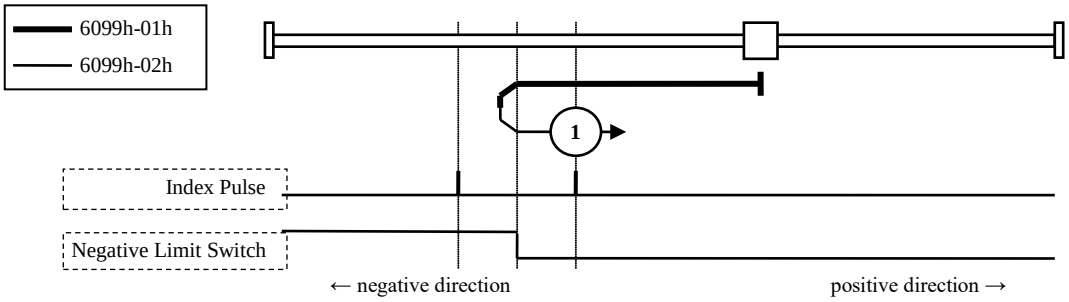

Homing on negative limit switch and index pulse

- Method 2

- This Method, if Positive limit switch is inactive, the initial operation direction turns into he positive direction.(An inactive state is shown in the state of low level by a figure)
- Home detection position is the first Index pulse detection position in the Negative side position of after a Positive limit signal becomes inactive.
  (See figure)
- When POT is not assigned, Homing error will occur(Homing error = 1).

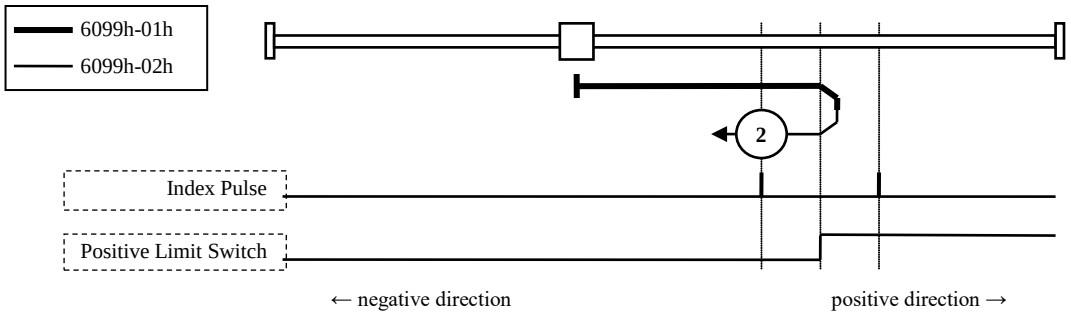

Homing on positive limit switch and index pulse

- Method 3, 4

- These Methods, the initial operation direction changes in the state of Home switch at startup
- Home detection position is the first Index pulse detection position in the Negative side or Positive side after the change of state of Home switch.
  (See figure)
- When HOME is not assigned, Homing error will occur(Homing error = 1).

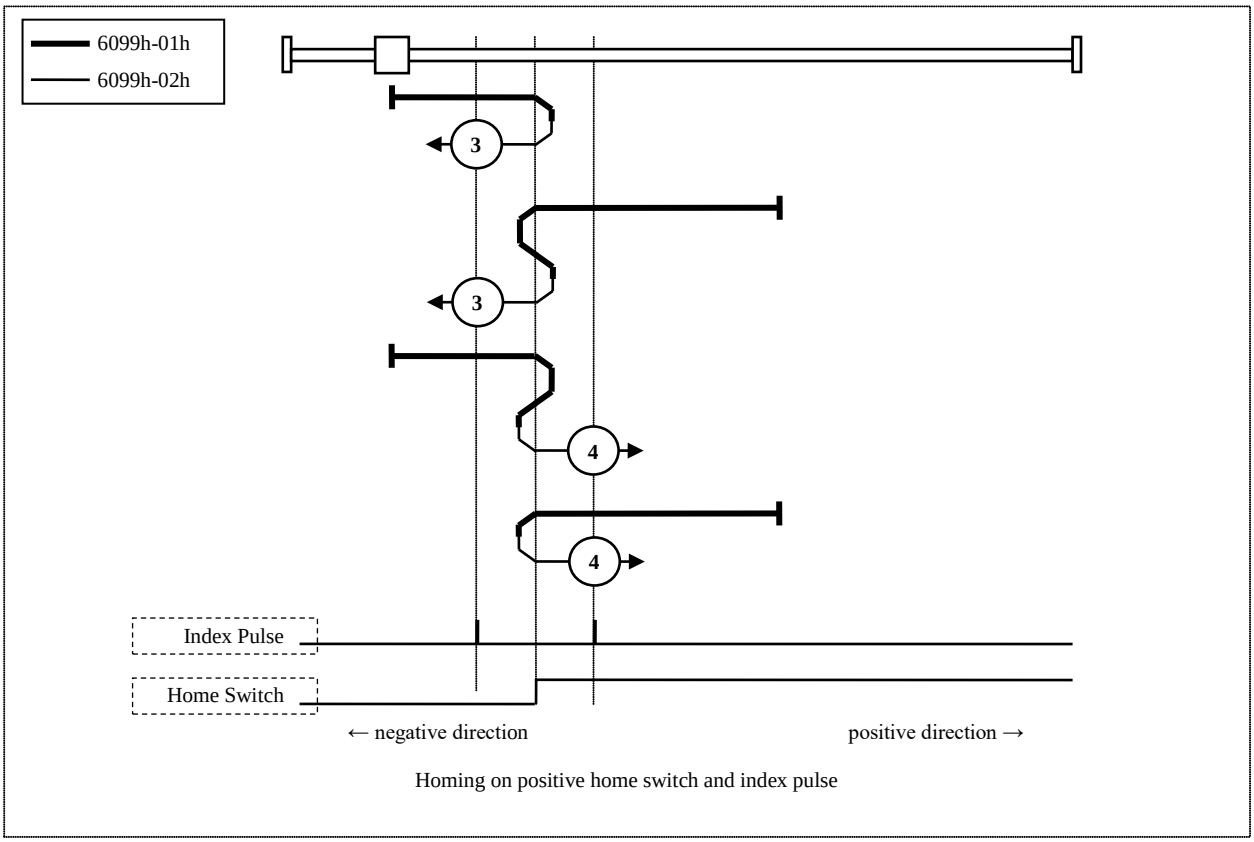

Homing on positive home switch and index pulse

- Method 5, 6

  - These Methods, the initial operation direction changes in the state of Home switch at startup
  - Home detection position is the first Index pulse detection position in the Negative side or Positive side after the change of state of Home switch.
    (See figure)
  - When HOME is not assigned, Homing error will occur(Homing error = 1).

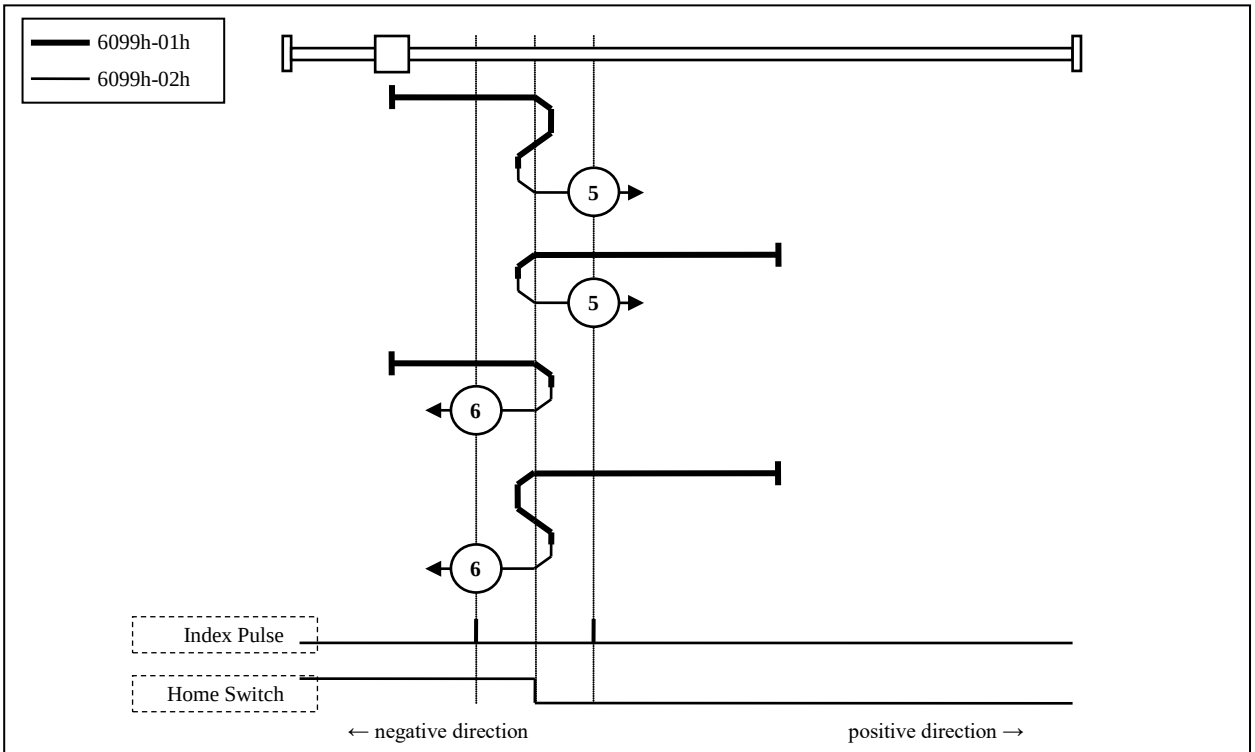

Homing on negative home switch and index pulse

- Method 7, 8, 9, 10

  - These Methods, use Home switch and Index pulse.
  - Method 7 and 8 initial operation directions, when Home switch is active at the time of a start of operation, becomes the Negative direction.
  - Method 9 and 10 initial operation directions, when Home switch is active at the time of a start of operation, becomes the Positive direction.
  - Home detection position is the near Index pulse in the rising or falling edge of Home switch. (See figure)
  - When HOME and POT are not assigned, Homing error will occur(Homing error = 1).

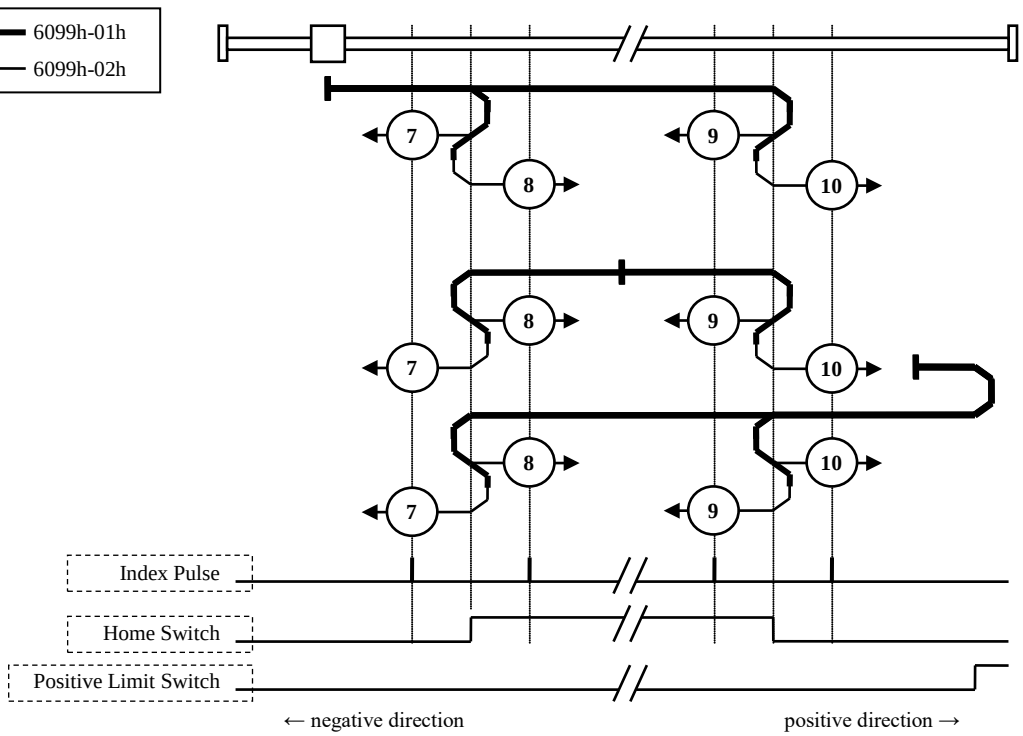

Homing on home switch and index pulse - positive initial motion

- Method 11, 12, 13, 14

  - These Methods, use Home switch and Index pulse.
  - Method 11 and 12 initial operation directions, when Home switch is active at the time of a start of operation, becomes the Positive direction.
  - Method 13 and 14 initial operation directions, when Home switch is active at the time of a start of operation, becomes the Negative direction.
  - Home detection position is the near Index pulse in the rising or falling edge of Home switch. (See figure)
  - When HOME and NOT are not assigned, Homing error will occur(Homing error = 1).

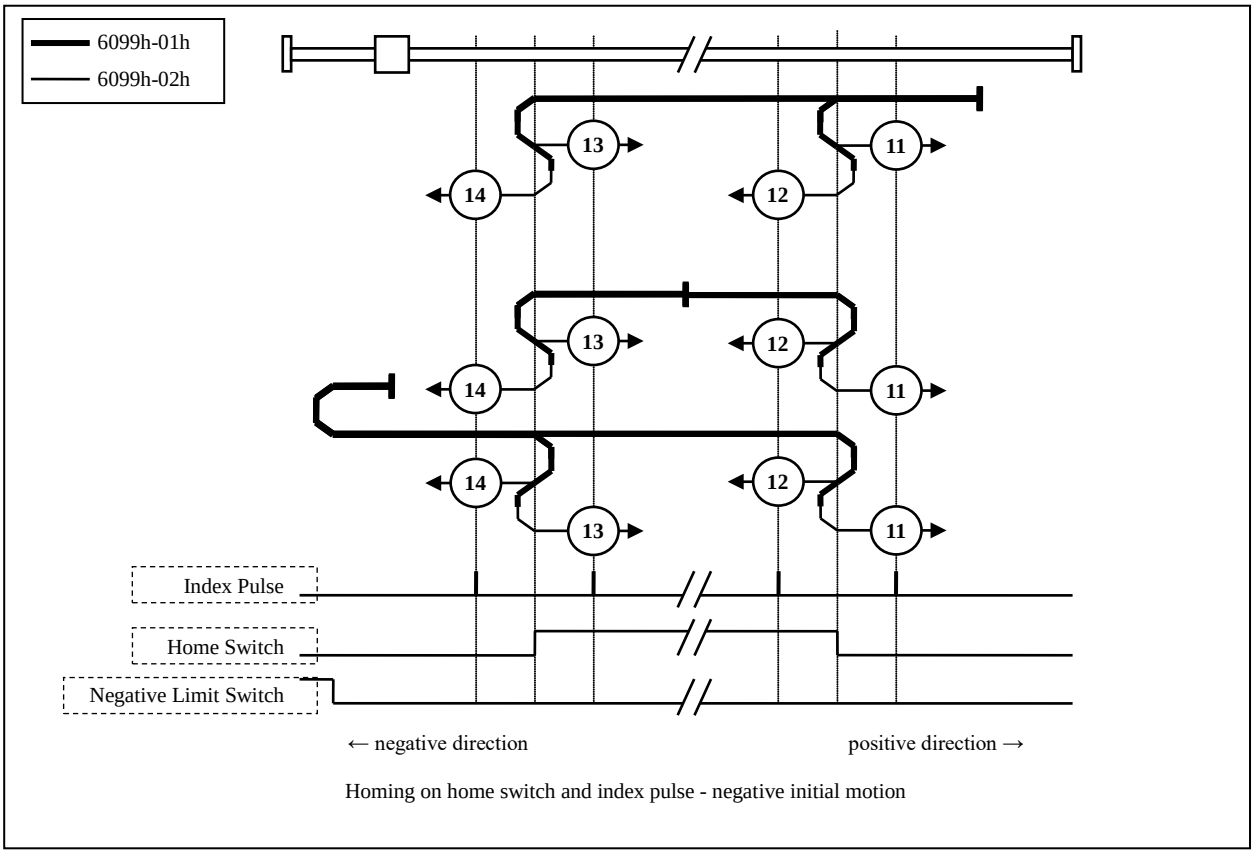

Homing on home switch and index pulse - negative initial motion

- Method 17

  - This Method resembles Method1.
    The difference is home detection position is not Index pulse. It is becoming the position where Limit switch changed.
    (See figure)
  - When NOT is not assigned, Homing error will occur(Homing error = 1).

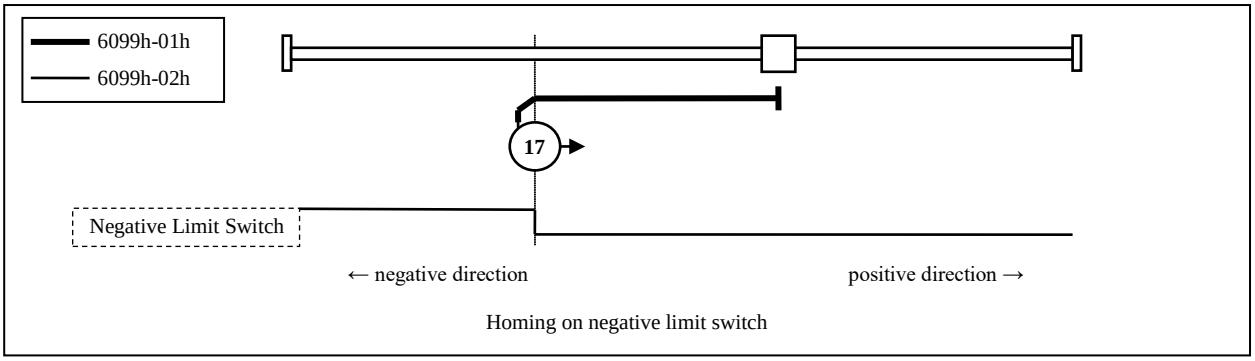

Homing on negative limit switch

- Method 18

  - This Method resembles Method2.
    The difference is home detection position is not Index pulse. It is becoming the position where Limit switch changed.
    (See figure)
  - When POT is not assigned, Homing error will occur(Homing error = 1).

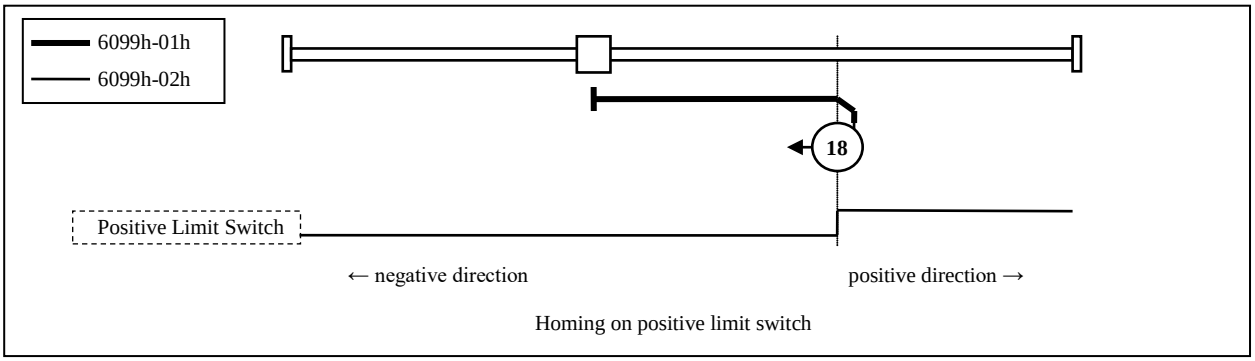

Homing on positive limit switch

- Method 19, 20

  - These Methods resembles Method3 and 4.
    The difference is home detection position is not Index pulse. It is becoming the position where Home switch changed.
    (See figure)
  - When HOME is not assigned, Homing error will occur(Homing error = 1).

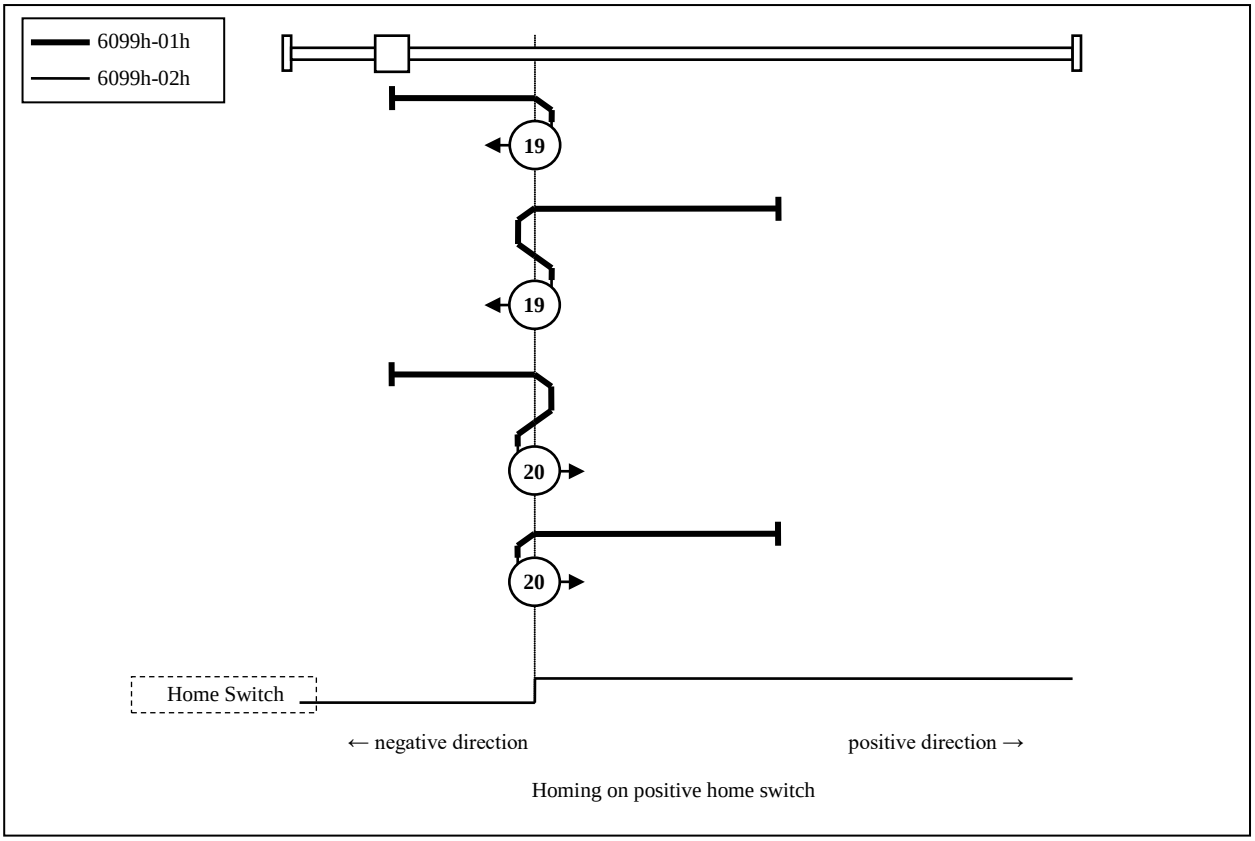

- Method 21, 22

  - These Methods resembles Method5 and 6.
    The difference is home detection position is not Index pulse. It is becoming the position where Home switch changed.
    (See figure)
  - When HOME is not assigned, Homing error will occur(Homing error = 1).

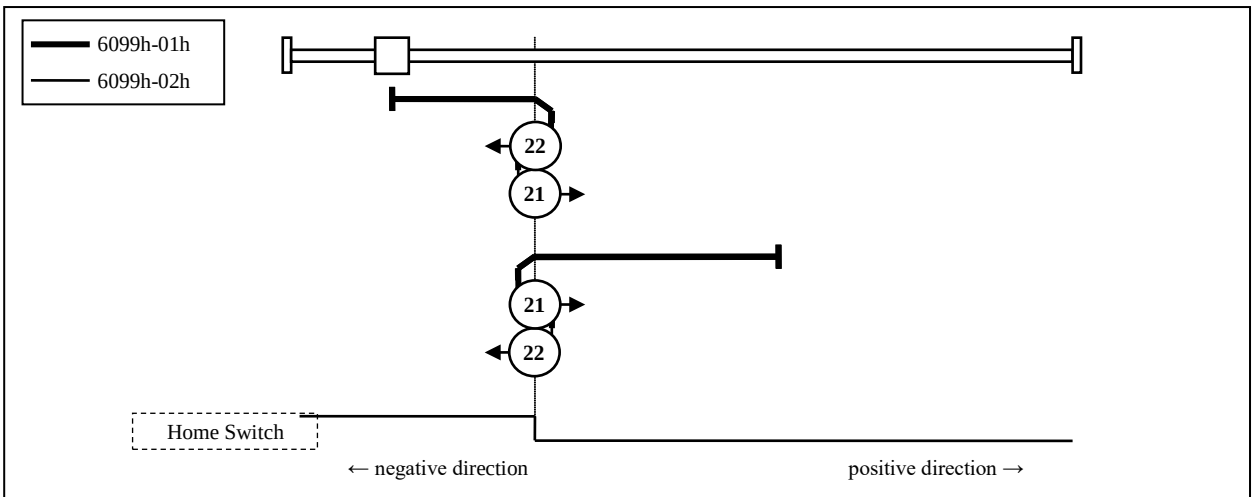

Homing on negative home switch and index pulse

- Method 23, 24, 25, 26

  - These Methods resembles Method7,8,9 and 10.
    The difference is home detection position is not Index pulse. It is becoming the position where Home switch changed.
    (See figure)
  - When HOME and POT are not assigned, Homing error will occur(Homing error = 1).

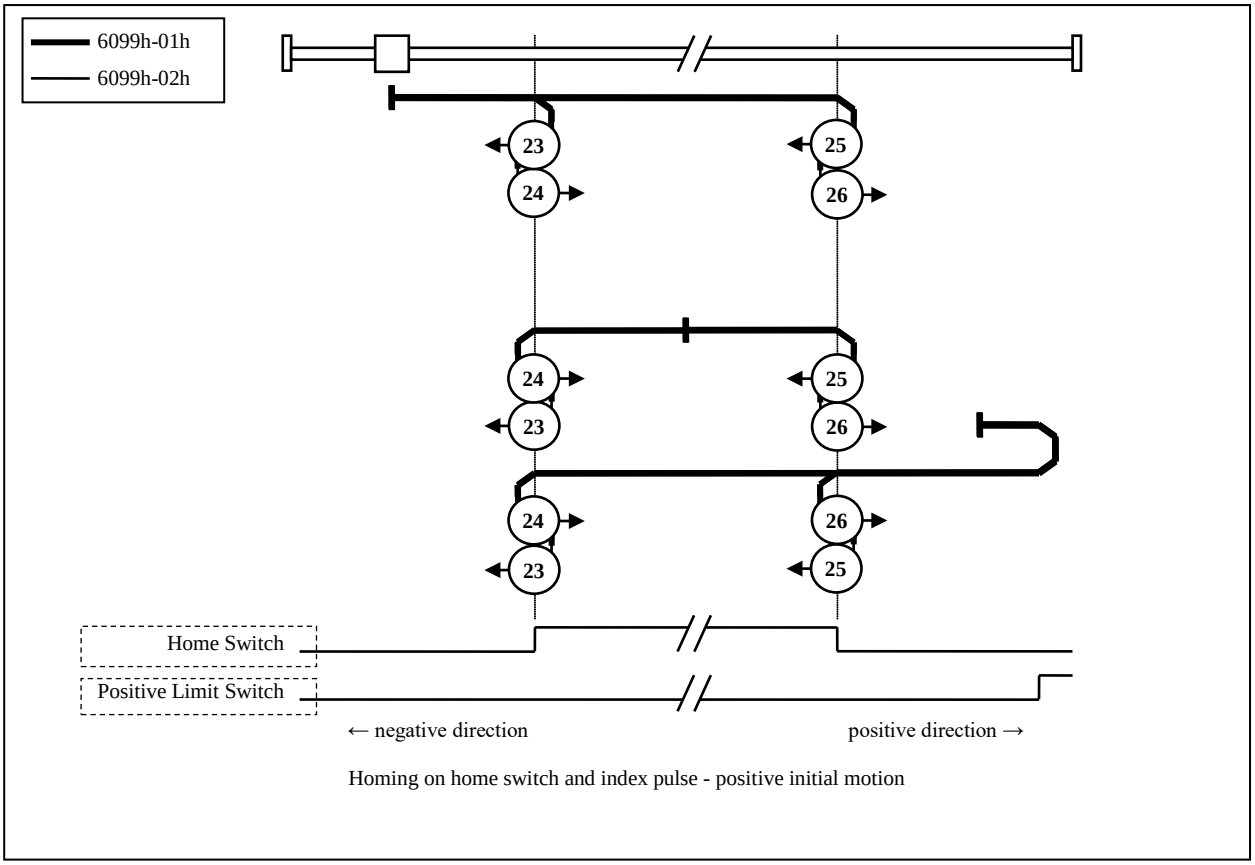

Homing on home switch and index pulse - positive initial motion

- Method 27, 28, 29, 30

  - These Methods resembles Method11,12,13 and 14.
    The difference is home detection position is not Index pulse. It is becoming the position where Home switch changed.
    (See figure)
  - When HOME and NOT are not assigned, Homing error will occur(Homing error = 1).

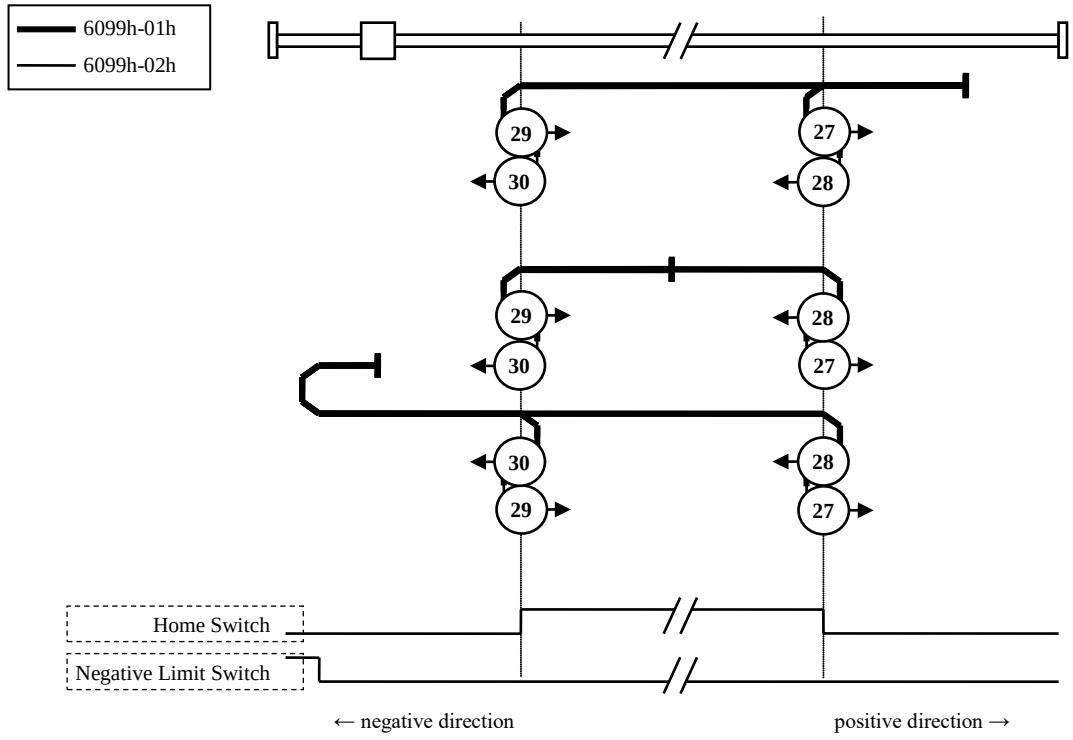

Homing on home switch and index pulse - negative initial motion

- Method 33, 34

  - These Methods, use only Index pulse.
  - Index pulse detected in operates in the direction shown in a figure is home detection position. (See figure)

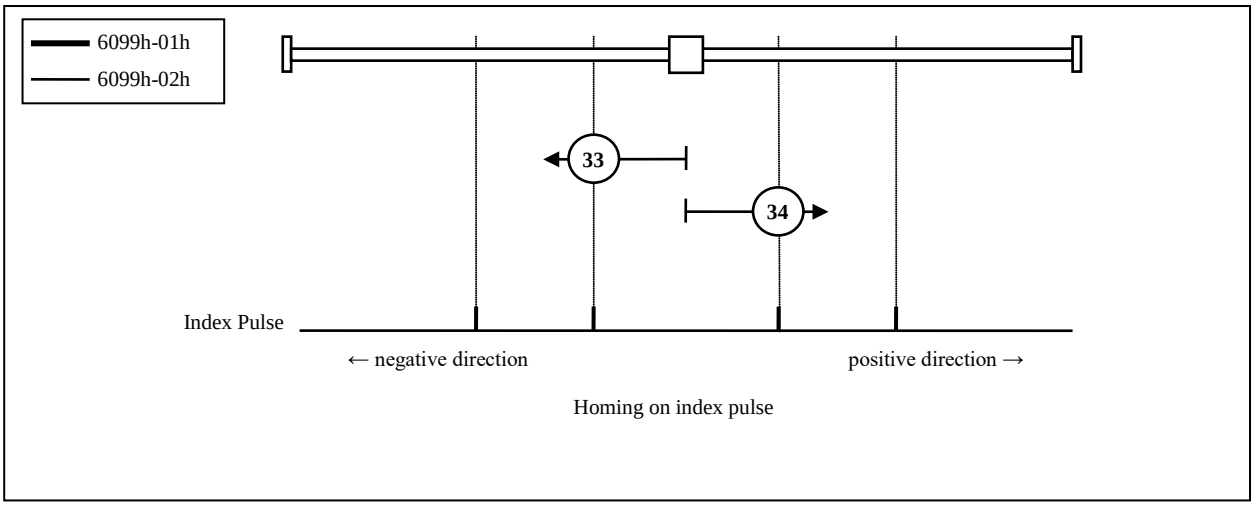

- Method 35, 37

  - Used to set the coordinate system (position information) of the servo driver.
    The following objects is initialized(Preset) on the basis of that position on homing startup.

    6062h(Position demand value) = 6064h(Position actual value) = 607Ch(Home offset)

    6063h(Position actual internal value) = 60FCh(Position demand internal value) = 0

    (NOTE) 607Ch(Home offset) is added to 6062h and 6064h.

  - Practicable even if the PDS state is not Operation enabled.

  - After 100ms or more expiration from stopping the command position, run Method 35 or 37.

  - Although Method35 and 37 are the same functions, use Method37 according to the ETG standard at the time of a new design.

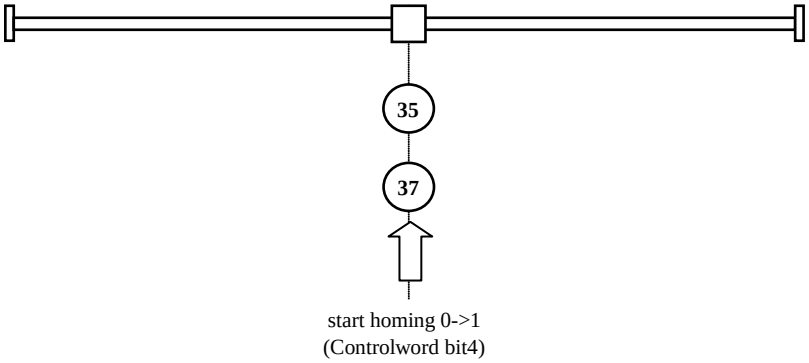

6-7 Velocity Control Function

6-7-1 Common Velocity Control Function

1) Velocity control block diagram

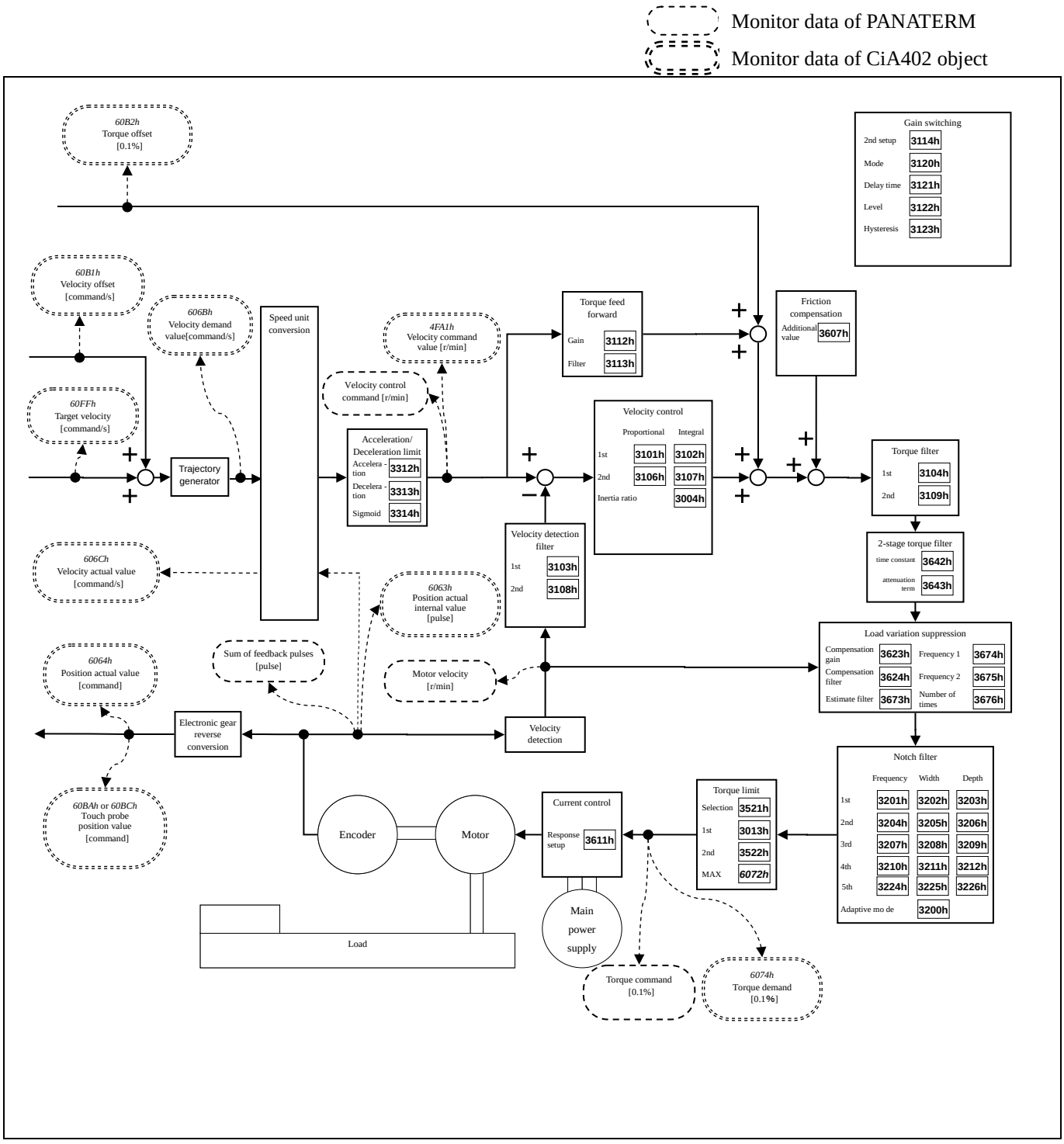

Velocity control block diagram

*1) A slanting number (ex.:607Ah) shows the object number of EtherCAT.
*2) A bold letter number (ex.:**3100h**) shows a parameter number.
*3) Polarity was omitted.
*4) When performing Frequency characteristic measurement (speed close loop characteristic, Torque speed (Vertical)) from the PANATERM, the driver switches to torque control internally.

In the mode of 2 degrees of freedom control, the structure in the following block diagram is adopted.

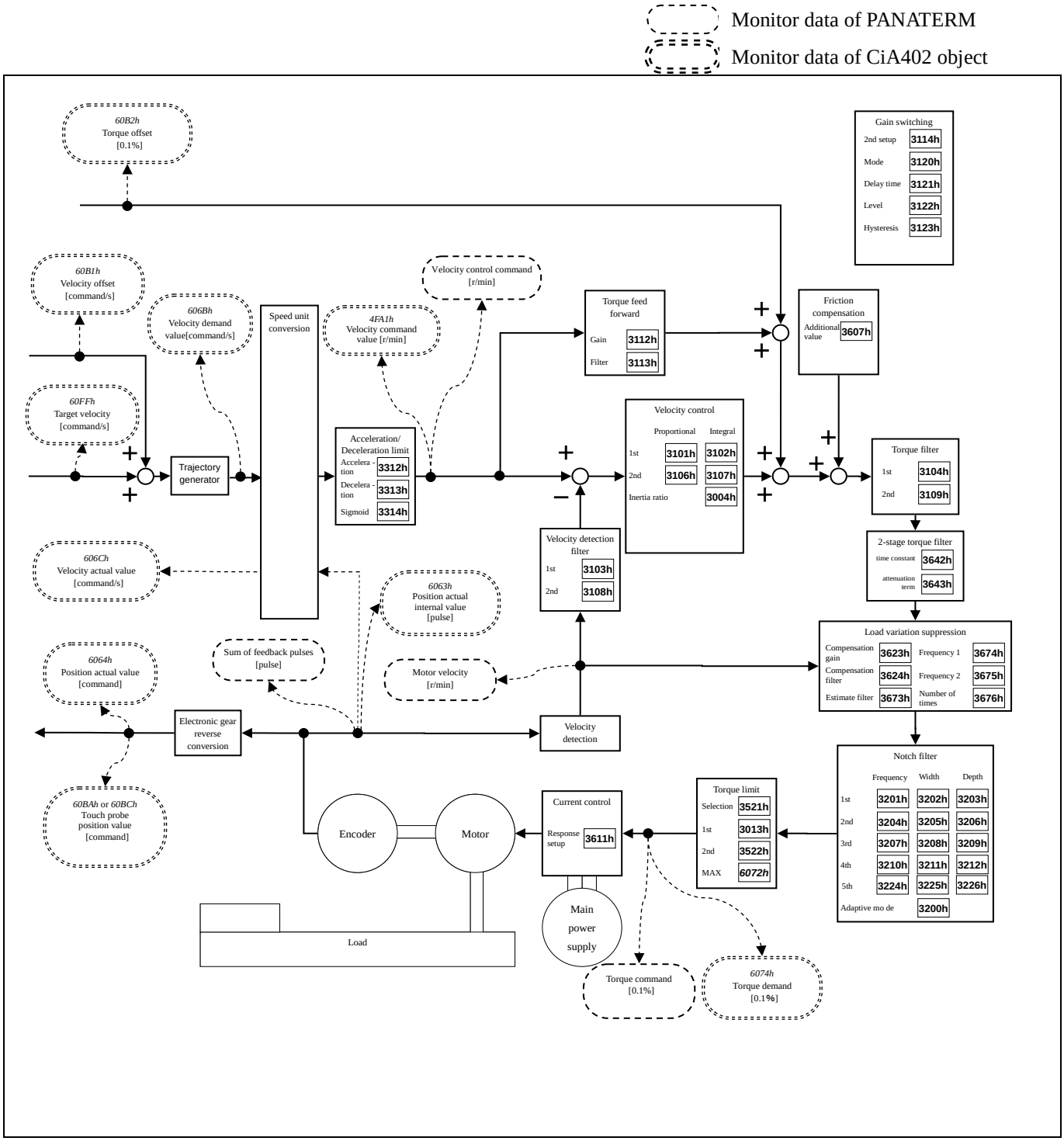

Block diagram of the 2 degrees of freedom control mode(Velocity control)

*1) A slanting number (ex.:607Ah) shows the object number of EtherCAT.
*2) A bold letter number (ex.:**3100h**) shows a parameter number.
*3) Polarity was omitted.
*4) When performing Frequency characteristic measurement (speed close loop characteristic, Torque speed (Vertical)) from the PANATERM, the driver switches to torque control internally.

2) Related objects common in velocity control (command & setup)

Index	Sub-Index	Name	Units	Range	Data Type	Access	PDO	Supported mode	
								pv	csv
3312h	00h	Acceleration time setup	1ms/ (1000r/min)	0 - 10000	I16	rw	No	Yes	Yes
3313h	00h	Deceleration time setup	1ms/ (1000r/min)	0 - 10000	I16	rw	No	Yes	Yes
3314h	00h	Sigmoid acceleration / deceleration time setup	1ms	0 - 1000	I16	rw	No	Yes	Yes
6040h	00h	Controlword	-	0 - 65535	U16	rw	RxPDO	Yes	Yes
6072h	00h	Max torque	0.1%	0 - 65535	U16	rw	RxPDO	Yes	Yes
6080h	00h	Max motor speed	r/min	0 - 4294967295	U32	rw	RxPDO	Yes	Yes
60B1h	00h	Velocity offset	Command/s	-2147483648 - 2147483647	I32	rw	RxPDO	Yes	Yes
60B2h	00h	Torque offset	0.1%	-32768 - 32767	I16	rw	RxPDO	Yes	Yes
60FFh	00h	Target velocity	Command/s	-2147483648 - 2147483647	I32	rw	RxPDO	Yes	Yes

- Besides, there are related objects for each control mode.
  Refer to the section "Related objects" of each control mode.

- The function of 6040h (Control word) can differ according to the control mode.
  Refer to the section "Related objects" of each control mode.

- Velocity system

Index	Sub-Index	Name / Description	Units	Range	Data Type	Access	PDO	Opmode	EEPROM
3312h	00h	Acceleration time setup	1ms/ (1000r/min)	0 - 10000	I16	rw	No	pv csv	Yes
		Set the acceleration processing time in response to the velocity instruction input.							
3313h	00h	Deceleration time setup	1ms/ (1000r/min)	0 - 10000	I16	rw	No	pv csv	Yes
		Set the deceleration processing time in response to the velocity instruction input.							
3314h	00h	Sigmoid acceleration /deceleration time setup	1ms	0 - 1000	I16	rw	No	pv csv	Yes
		Set the S-curve time for acceleration/deceleration process when the velocity instruction is applied.							
6080h	00h	Max motor speed	r/min	0 - 4294967295	U32	rw	RxPDO	ALL	Yes *1)
		• Set the maximum speed of motor. • The maximum value is limited by the maximum speed read from the motor in internal processing. • At tq or cst, the speed is limited with the setting value of this object. *1) In the first edition of the software version (Ver1.01), it is not supported for backup to EEPROM. The maximum speed read from the motor is set when the control power is turned on. In the enhanced software version 1 and later (Ver1.02 and later), it is supported for backup to EEPROM. The value stored in EEPROM is set when the control power is turned on.							
60B1h	00h	Velocity offset	Command/s	-2147483648 - 2147483647	I32	rw	RxPDO	pp ip pv hm csp csv	Yes
		• Set the offset value (velocity feed foward) of the velocity command. • The maximum value is limited by the 6080h (Max motor speed) in internal processing.							
60FFh	00h	Target velocity	Command/s	-2147483648 - 2147483647	I32	rw	RxPDO	pv csv	No
		• Set the target velocity. • The internal target velocity is the sum of the preset value of this object and 60B1h (Velocity offset). • The maximum value of the internal target velocity is limited by the internal processing at either the smaller 607Fh(Max profile velocity) and 6080h(Max motor speed).							

- Torque system

Index	Sub-Index	Name / Description	Units	Range	Data Type	Access	PDO	Opmode	EEPROM
6072h	00h	Max torque	0.1%	0 - 65535	U16	rw	RxPDO	ALL	Yes
		• Sets the maximum torque of the motor. • The maximum value is limited by the maximum torque read out from the motor in internal processing. • The maximum torque of the motor varies with the motor used.							
60B2h	00h	Torque offset	0.1%	0 - 4294967295	U32	rw	RxPDO	ALL	No
		• Sets the offset of the torque command (torque feedforward). • During slowdown in over-travel inhibition(in emergncy stop), the torque feedforward level becomes 0.							

- Other

Index	Sub-Index	Name / Description	Units	Range	Data Type	Access	PDO	Op-mode	EEPROM
3724h	00h	Communication function extended setup 3	—	-32768 - 32767	I16	rw	No	ALL	Yes
		bit7 : Internal value state selection of objects 60B2h(Torque offset) in servo-off (Fall prevention function in the event of Servo-ON) 0: Clear 1: Updated with the set value of 60B2h							

3) Related objects common in velocity control (monitoring)

Index	Sub-Index	Name	Units	Range	Data Type	Access	PDO	Supported mode	
								pv	csv
4D29h *2)	00h	Over load factor	0.1%	0 - 65535	U16	ro	TxPDO	Yes	Yes
4F0Dh	00h	External scale position	pulse (external scale)	-2147483648 - 2147483647	I32	ro	TxPDO	Yes	Yes
4F11h	00h	Regenerative load ratio	%	-2147483648 - 2147483647	I32	ro	TxPDO	Yes	Yes
4F31h	00h	Inertia ratio	%	-2147483648 - 2147483647	I32	ro	No	Yes	Yes
4F41h	00h	Number of entries	-	2	U8	ro	No	Yes	Yes
	01h	Mechanical angle (Single-turn data)	pulse	-2147483648 - 2147483647	I32	ro	TxPDO *1)	Yes	Yes
	02h	Multi-turn data	rotation	-2147483648 - 2147483647	I32	ro	TxPDO *1)	Yes	Yes
4F42h	00h	Electrical angle	0.0879°	-2147483648 - 2147483647	I32	ro	No	Yes	Yes
4F48h	00h	External scale pulse total	pulse (external scale)	-2147483648 - 2147483647	I32	ro	TxPDO	Yes	Yes
4F49h	00h	External scale absolute position	pulse (external scale)	-2147483648 - 2147483647	I32	ro	TxPDO	Yes	Yes
4F87h	00h	External scale data (Higher)	pulse (external scale)	-2147483648 - 2147483647	I32	ro	TxPDO	Yes	Yes
4F88h	00h	External scale data (Lower)	pulse (external scale)	-2147483648 - 2147483647	I32	ro	TxPDO	Yes	Yes
4FA1h	00h	Velocity command value	r/min	-2147483648 - 2147483647	I32	ro	TxPDO	Yes	Yes
4FA8h	00h	Positive direction torque limit value	0.05%	-2147483648 - 2147483647	I32	ro	TxPDO	Yes	Yes
4FA9h	00h	Negative direction torque limit value	0.05%	-2147483648 - 2147483647	I32	ro	TxPDO	Yes	Yes
6041h	00h	Statusword	-	0 - 65535	U16	ro	TxPDO	Yes	Yes
6063h	00h	Position actual internal value	pulse	-2147483648 - 2147483647	I32	ro	TxPDO	Yes	Yes
6064h	00h	Position actual value	Command	-2147483648 - 2147483647	I32	ro	TxPDO	Yes	Yes
606Bh	00h	Velocity demand value	Command/s	-2147483648 - 2147483647	I32	ro	TxPDO	Yes	Yes
6069h	00h	Velocity sensor actual value	-	-2147483648 - 2147483647	I32	ro	TxPDO	Yes	Yes
606Ch	00h	Velocity actual value	Command/s	-2147483648 - 2147483647	I32	ro	TxPDO	Yes	Yes
6074h	00h	Torque demand	0.1%	-32768 - 32767	I16	ro	TxPDO	Yes	Yes
6076h	00h	Motor rated torque	mNm	0 – 4294967295	U32	ro	TxPDO	Yes	Yes
6077h	00h	Torque actual value	0.1%	-32768 - 32767	I16	ro	TxPDO	Yes	Yes

*1) The first edition of the software version (Ver1.01) does not support TxPDO of 4F41h-01h and 4F41h-02h.
*2) It is not supported in software versions corresponding to function extended edition 1 (Ver1.02) or earlier.

- Besides, there are related objects for each control mode.
  Refer to the section "Related objects" of each control mode.

- The function of 6041h (Status word) can differ according to each control mode.
  Refer to the section "Related objects" of each control mode.

- Position system

Index	Sub-Index	Name / Description	Units	Range	Data Type	Access	PDO	Opmode	EEPROM
4F0Dh	00h	External scale position	pulse (External scale)	-2147483648 - 2147483647	I32	ro	TxPDO	ALL	No
		Position of the external scale is displayed.							
4F41h	-	Motor encoder data	-	-	-	-	-	-	-
		Position information is displayed.							
	00h	Number of entries	-	2	U8	ro	No	ALL	No
		The number of Sub-Index of 4F41h (Motor encoder data) is displayed.							
	01h	Mechanical angle (Single-turn data)	pulse	-2147483648 - 2147483647	I32	ro	TxPDO	ALL	No
		Motor mechanical angle (encoder single-turn data) is displayed. (Note) The first edition of the software version (Ver1.01) does not support TxPDO.							
	02h	Multi-turn data	rotation	-2147483648 - 2147483647	I32	Ro	TxPDO	ALL	No
		Multi-turn data of the absolute encoder is displayed. (Note) The first edition of the software version (Ver1.01) does not support TxPDO.							
4F42h	00h	Electrical angle	0.0879°	-2147483648 - 2147483647	I32	ro	No	ALL	No
		The electrical angle of the motor is displayed.							
4F48h	00h	External scale pulse total	pulse (External scale)	-2147483648 – 2147483647	I32	ro	TxPDO	ALL	No
		Sum of external scale pulse counts is displayed.							
4F49h	00h	External scale absolute position	pulse (External scale)	-2147483648 – 2147483647	I32	ro	TxPDO	ALL	No
		Absolute position of the external scale is displayed.							
4F87h	00h	External scale data (Higher)	pulse (External scale)	-2147483648 – 2147483647	I32	ro	TxPDO	ALL	No
		Higher 24 bits of external scale data is displayed.							
4F88h	00h	External scale data (Lower)	pulse (External scale)	-2147483648 – 2147483647	I32	ro	TxPDO	ALL	No
		Lower 24 bits of external scale data is displayed.							
6063h	00h	Position actual internal value	pulse	-2147483648 - 2147483647	I32	ro	TxPDO	ALL	No
		Displays the actual position of the motor. The value is on an encoder basis during other than full-closed control, and on an external scale basis during full-closed control.							
6064h	00h	Position actual value	Command	-2147483648 - 2147483647	I32	ro	TxPDO	ALL	No
		Displays the actual position of the motor. Under full-closed control, this is the external scale position.							

- Velocity system

Index	Sub-Index	Name / Description	Units	Range	Data Type	Access	PDO	Opmode	EEPROM
4FA1h	00h	Velocity command value	r/min	-2147483648 - 2147483647	I32	ro	TxPDO	ALL	No
		Velocity control command is displayed.							
6069h	00h	Velocity sensor actual value	—	-2147483648 – 2147483647	I32	ro	TxPDO	ALL	No
		Indicate sensor value of actual velocity. Return 0 always because this servo driver not supported.							
606Bh	00h	Velocity demand value	Command/s	-2147483648 - 2147483647	I32	ro	TxPDO	pv csv	No
		Displays internal command velocity.							
606Ch	00h	Velocity actual value	Command/s	-2147483648 - 2147483647	I32	ro	TxPDO	ALL	No
		Displays the actual velocity of the motor.							

- Torque system

Index	Sub-Index	Name / Description	Units	Range	Data Type	Access	PDO	Opmode	EEPROM
4D29h	00h	Over load factor	0.1%	0 – 65535	U16	ro	TxPDO	ALL	No
		The ratio [0.1%] to the rated load is displayed. (Note) It is not supported in software versions corresponding to function extended edition 1 (Ver1.02) or earlier.							
4F11h	00h	Regenerative load ratio	%	-2147483648 - 2147483647	I32	ro	TxPDO	ALL	No
		Regenerative load ratio (ratio of the regenerative overload protection to the alarm occurrence level) is displayed.							
4F31h	00h	Inertia ratio	%	-2147483648 - 2147483647	I32	ro	No	ALL	No
		Inertia ratio is displayed. The ratio of load inertia to the motor's rotor inertia (equivalent of value of 3004h) Inertia ratio = (load inertia/rotor inertia) x 100							
4FA8h	00h	Positive direction torque limit value	0.05%	-2147483648 - 2147483647	I32	ro	TxPDO	ALL	No
		Positive direction torque limit value is displayed.							
4FA9h	00h	Negative direction torque limit value	0.05%	-2147483648 - 2147483647	I32	ro	TxPDO	ALL	No
		Negative direction torque limit value is displayed.							
6074h	00h	Torque demand	0.1%	-32768 - 32767	I16	ro	TxPDO	ALL	No
		Displays internal command torque.							
6076h	00h	Motor rated torque	mN・m	0 – 4294967295	U32	ro	TxPDO	ALL	No
		Automatically set the rated torque of the motor.							
6077h	00h	Torque actual value	0.1%	-32768 - 32767	I16	ro	TxPDO	ALL	No
		• Displays the actual torque. • It becomes a value equivalent to actual current value. • This output value is a reference value and does not guarantee an actual value.							

6-7-2 Profile Velocity Mode (pv mode)

It is a velocity control mode to operate by designating the target velocity, addition-subtraction velocity, etc. and creating a position command in the servo driver.
In this control mode, please use the communication cycle of 250μs or more.

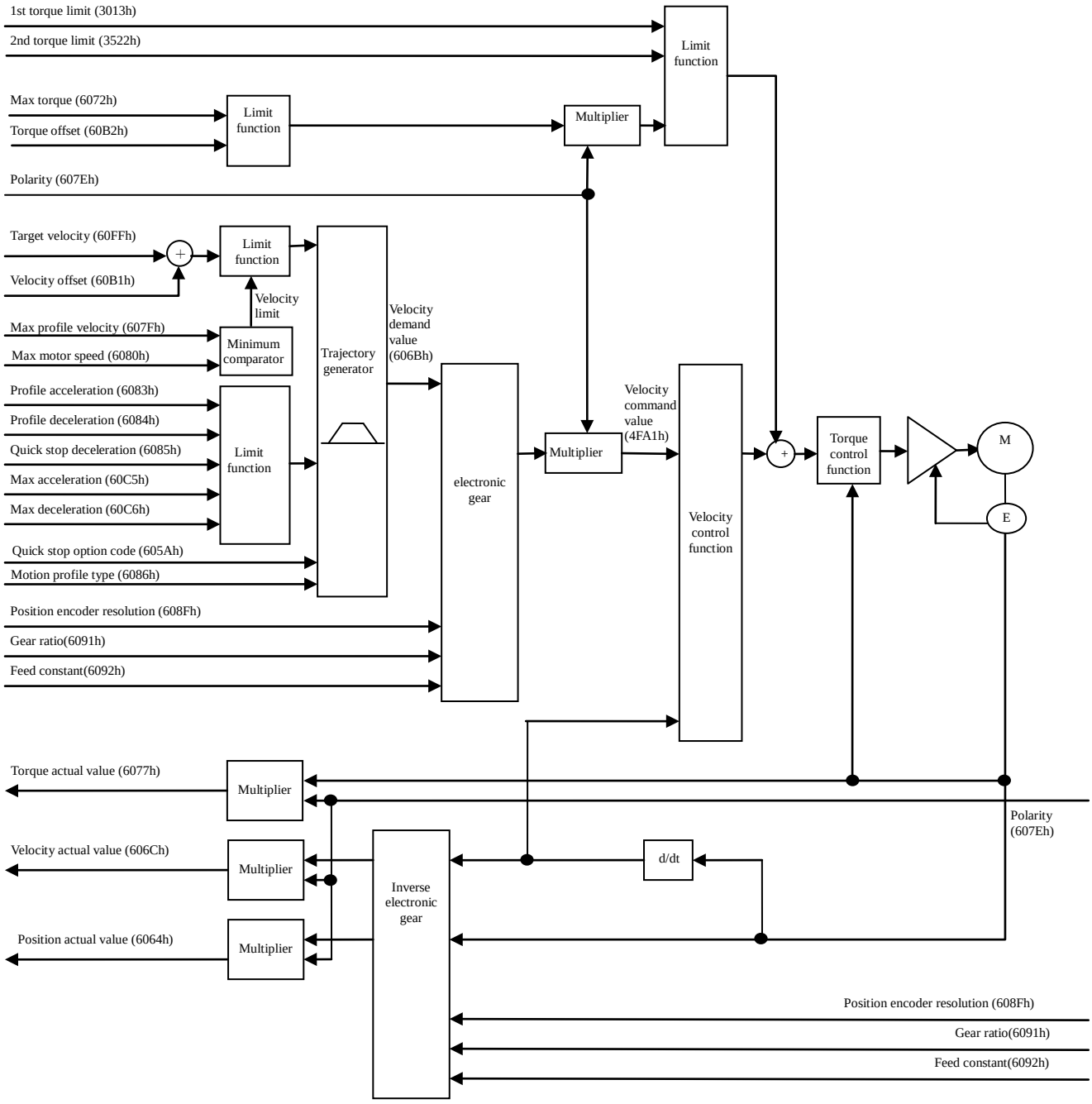

1) Objects related to pv mode (command & setup)

Index	Sub-Index	Name	Units	Range	Data Type	Access	PDO
6040h	00h	Controlword	-	0 - 65535	U16	rw	RxPDO
606Ah	00h	Sensor selection code	-	-32768 - 32767	I16	ro	TxPDO
607Fh	00h	Max profile velocity	Command/s	0 - 4294967295	U32	rw	RxPDO
6083h	00h	Profile acceleration	Command/s^2	0 - 4294967295	U32	rw	RxPDO
6084h	00h	Profile deceleration	Command/s^2	0 - 4294967295	U32	rw	RxPDO
60C5h	00h	Max acceleration	Command/s^2	0 - 4294967295	U32	rw	RxPDO
60C6h	00h	Max deceleration	Command/s^2	0 - 4294967295	U32	rw	RxPDO

- Besides, there are related objects common to the velocity control.
  For more information, refer to section 6-7-1.

Index	Sub-Index	Name	Units	Range	Data Type	Access	PDO
6072h	00h	Max torque	0.1%	0 - 65535	U16	rw	RxPDO
6080h	00h	Max motor speed	r/min	0 - 4294967295	U32	rw	RxPDO
60B1h	00h	Velocity offset	Command/s	-2147483648 - 2147483647	I32	rw	RxPDO
60B2h	00h	Torque offset	0.1%	-32768 - 32767	I16	rw	RxPDO
60FFh	00h	Target velocity	Command/s	-2147483648 - 2147483647	I32	rw	RxPDO

- There is a related object of common motion as well.
  For more information, refer to Chapter 6-9.

Index	Sub-Index	Name	Units	Range	Data Type	Access	PDO
6007h	00h	Abort connection option code	—	0 - 3	I16	rw	No
605Ah	00h	Quick stop option code	—	-2 - 7	I16	rw	No
605Bh	00h	Shutdown option code	—	0 - 1	I16	rw	No
605Ch	00h	Disable operation option code	—	0 - 1	I16	rw	No
605Dh	00h	Halt option code	—	1 - 3	I16	rw	No
605Eh	00h	Fault reaction option code	—	0 - 2	I16	rw	No
607Bh	-	Position range limit	-	-	-	-	-
	00h	Highest sub-index supported	-	2	U8	ro	No
	01h	Min position range limit	Command	-2147483648 – 2147483647	I32	rw	RxPDO
	02h	Max position range limit	Command	-2147483648 – 2147483647	I32	rw	RxPDO
607Ch	00h	Home offset	Command	-2147483648 – 2147483647	I32	rw	RxPDO
607Eh	00h	Polarity	-	0 – 255	U8	rw	No
6085h	00h	Quick stop deceleration	Command/s^2	0 – 4294967295	U32	rw	RxPDO
6086h	00h	Motion profile type	-	-32768 – 32767	I16	rw	RxPDO
608Fh	-	Position encoder resolution	-	-	-	-	-
	00h	Highest sub-index supported	-	2	U8	ro	No
	01h	Encoder increments	pulse	1 – 4294967295	U32	ro	No
	02h	Motor revolutions	r (motor)	1 – 4294967295	U32	ro	No
6091h	-	Gear ratio	-	-	-	-	-
	00h	Number of entries	-	2	U8	ro	No
	01h	Motor revolutions	r (motor)	1 – 4294967295	U32	rw	No
	02h	Shaft revolutions	r (shaft)	1 – 4294967295	U32	rw	No
6092h	-	Feed constant	-	-	-	-	-
	00h	Highest sub-index supported	-	2	U8	ro	No
	01h	Feed	Command	1 – 4294967295	U32	rw	No
	02h	Shaft revolutions	r (shaft)	1 – 4294967295	U32	rw	No
60A3h	00h	Profile jerk use	-	1 – 2, 255	U8	rw	No
60A4h	-	Profile jerk	-	-	-	-	-
	00h	Highest sub-index supported	-	2	U8	ro	No
	01h	Profile jerk1	Command/s^3	0 – 4294967295	U32	rw	No
	02h	Profile jerk2	Command/s^3	0 – 4294967295	U32	rw	No
60B8h	00h	Touch probe function	-	0 - 65535	U16	rw	RxPDO
60FEh	-	Digital outputs	-	-	-	-	-
	00h	Number of entries	-	2	U8	ro	No
	01h	Physical outputs	-	0 - 4294967295	U32	rw	RxPDO
	02h	Bit mask	-	0 - 4294967295	U32	rw	RxPDO

- Controlword (6040h) <Functions in pv mode>

Index	Sub-Index	Name / Description	Units	Range	Data Type	Access	PDO	Opmode	EEPROM
6040h	00h	Controlword	-	0 - 65535	U16	rw	RxPDO	ALL	No

• Set a command to a servo driver including the PDS state transition.

Bit information details

15 - 10	9	8	7	6	5	4	3	2	1	0
r	oms r	h	fr	oms r	r	r	eo	qs	ev	so

r = reserved (not supported)
oms = operation mode specific (control mode dependent bit)
h = halt
fr = fault reset
eo = enable operation
qs = quick stop
ev = enable voltage
so = switch on

* Note: The pv mode does not use the oms bit.

- Velocity system

Index	Sub-Index	Name / Description	Units	Range	Data Type	Access	PDO	Op-mode	EEPROM
606Ah	00h	Sensor selection code	-	-32768 - 32767	I16	ro	TxPDO	pv	No
		• Set the sensor selection code. Since this servo driver does not support velocity sensor, always 0 is set. 0: Actual position from the position sensor 1: Actual velocity from the velocity sensor (not supported)							
607Fh	00h	Max profile velocity	Command/s	0 - 4294967295	U32	rw	RxPDO	pp hm ip pv	Yes
		• Set the velocity limit in the profile position mode (pp), homing position mode (hm), interpolating position mode (ip), and profile velocity mode (pv). • The maximum value is limited by the (Max motor speed) 6080h in internal processing.							

- Acceleration and deceleration system

Index	Sub-Index	Name / Description	Units	Range	Data Type	Access	PDO	Op-mode	EEPROM
6083h	00h	Profile acceleration	Command/s^2	0 - 4294967295	U32	rw	RxPDO	pp ip pv	Yes
		• Set the profile acceleration. • If it is set to 0, internal processing is treated as 1.							
6084h	00h	Profile deceleration	Command/s^2	0 - 4294967295	U32	rw	RxPDO	pp ip pv	Yes
		• Set the profile deceleration. • If it is set to 0, internal processing is treated as 1.							
60C5h	00h	Max acceleration	Command/s^2	0 - 4294967295	U32	rw	RxPDO	pp hm ip pv	Yes
		• Set the maximum acceleration. • If it is set to 0, internal processing is treated as 1.							
60C6h	00h	Max deceleration	Command/s^2	0 - 4294967295	U32	rw	RxPDO	pp hm ip pv	Yes
		• Set the maximum deceleration. • If it is set to 0, internal processing is treated as 1.							

2) Objects related to pv mode (monitoring)

Index	Sub-Index	Name	Units	Range	Data Type	Access	PDO
6041h	00h	Statusword	-	0 - 65535	U16	ro	TxPDO
606Dh	00h	Velocity window	Command/s	0 - 65535	U16	rw	RxPDO
606Eh	00h	Velocity window time	1ms	0 - 65535	U16	rw	RxPDO
606Fh	00h	Velocity threshold	Command/s	0 - 65535	U16	rw	RxPDO
6070h	00h	Velocity threshold time	1ms	0 - 65535	U16	rw	RxPDO

- Besides, there are related objects common to the velocity control.
  For more information, refer to section 6-7-1.

Index	Sub-Index	Name	Units	Range	Data Type	Access	PDO
6063h	00h	Position actual internal value	pulse	-2147483648 - 2147483647	I32	ro	TxPDO
6064h	00h	Position actual value	Command	-2147483648 - 2147483647	I32	ro	TxPDO
6069h	00h	Velocity sensor actual value	-	-2147483648 - 2147483647	I32	ro	TxPDO
606Bh	00h	Velocity demand value	Command/s	-2147483648 - 2147483647	I32	ro	TxPDO
606Ch	00h	Velocity actual value	Command/s	-2147483648 - 2147483647	I32	ro	TxPDO
6074h	00h	Torque demand	0.1%	-32768 – 32767	I16	ro	TxPDO
6076h	00h	Motor rated torque	mN･m	0 – 4294967295	U32	ro	TxPDO
6077h	00h	Torque actual value	0.1%	-32768 - 32767	I16	ro	TxPDO

- There is a related object of common motion as well.
  For more information, refer to Chapter 6-9.

Index	Sub-Index	Name	Units	Range	Data Type	Access	PDO
603Fh	00h	Error code	-	0 - 65535	U16	ro	TxPDO
60B9h	00h	Touch probe status	-	0 - 65535	U16	ro	TxPDO
60BAh	00h	Touch probe pos1 pos value	Command	-2147483648 – 2147483647	I32	ro	TxPDO
60BBh	00h	Touch probe pos1 neg value	Command	-2147483648 – 2147483647	I32	ro	TxPDO
60BCh	00h	Touch probe pos2 pos value	Command	-2147483648 – 2147483647	I32	ro	TxPDO
60BDh	00h	Touch probe pos2 neg value	Command	-2147483648 – 2147483647	I32	ro	TxPDO
60FDh	00h	Digital inputs	-	0 - 4294967295	U32	ro	TxPDO

- Statusword (6041h) <Functions in pv mode>

Index	Sub-Index	Name / Description	Units	Range	Data Type	Access	PDO	Op-mode	EEPROM
6041h	00h	Statusword	-	0 - 65535	U16	ro	TxPDO	ALL	No

• Displays the servo driver state.

Bit information details

15 - 14	13	12	11	10	9	8	7	6	5	4	3	2	1	0
r	oms max slippage error	speed	ila	oms target reached	rm	r	w	sod	qs	ve	f	oe	so	rtso

r = reserved (not supported)

oms = operation mode specific (control mode dependent bit)

ila = internal limit active

rm = remote

w = warning

sod = switch on disabled

qs = quick stop

ve = voltage enabled

f = fault

oe = operation enabled

so = switched on

rtso = ready to switch on

bit13 (operation mode specific):

Bit	Name	Value	Definition
13	max slippage error	-	(not supported)

bit10 (target reached(Velocity reached)):

When the difference between 60FFh (Target velocity) + 60B1h (Velocity offset) and 606Ch(Velocity actual value) is in the range set by 606Dh (Velocity window) and the time set by 606Eh (Velocity window time) has elapsed, bit10 of 6041h (Statusword) is set to 1.

Bit	Name	Value	Definition
10	target reached	0	halt=0 (during normal operation) : Speed control not yet completed halt=1 (during stop by halt) : During axis deceleration
		1	halt=0 (during normal operation) : Speed control completed halt=1 (during stop by halt) : Axis stop (Axis speed is 0.)

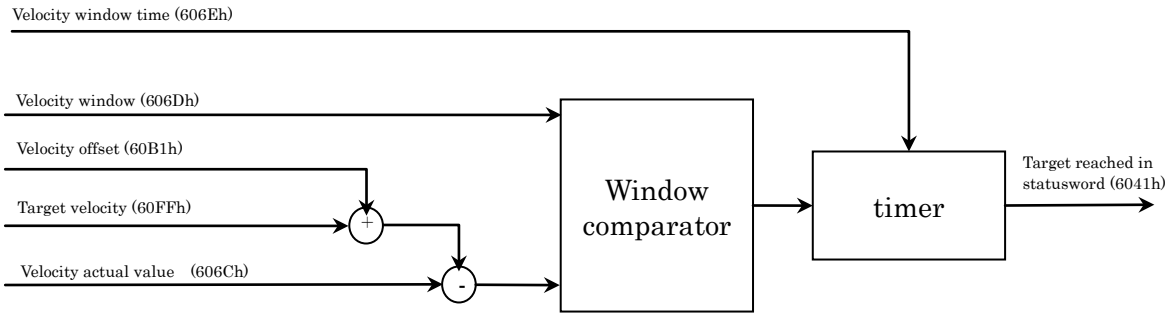

<Velocity reached (functional overview)>

Index	Sub-Index	Name / Description	Units	Range	Data Type	Access	PDO	Op-mode	EEPROM
606Dh	00h	Velocity window	Command/s	0 - 65535	U16	rw	RxPDO	pv	Yes
		• Set the threshold where bit 10 (Target reached) of 6041h (Statusword) will be 1 when the difference between the sum of 60FFh (Target velocity) and 60B1h (Velocity offset), and 606Ch (Velocity actual value), is within the range set by this parameter and the time set by 606Eh (Velocity window time) has elapsed. If the velocity deviation is out of the values set by this parameter, the bit 10 of 6041h will be 0.							
606Eh	00h	Velocity window time	1ms	0 - 65535	U16	rw	RxPDO	pv	Yes
		• Set the time from the point when the difference between the sum of 60FFh (Target velocity) and 60B1h (Velocity offset), and 606Ch (Velocity actual value), falls within the range set by 606Dh (Velocity window) to bit10 (target reached) of 6041h (Statusword) becomes 1.							

bit12 (speed):

When 606Ch (Velocity actual value) exceeds the value set in 606Fh (Velocity threshold) and the time set by 6070h (Velocity threshold time) has elapsed, bit 12 of 6041h (Statusword) changes to 0.
When 606Ch (Velocity actual value) becomes lower than the value set in 606Fh (Velocity threshold), bit12 of 6041h (Statusword) changes to 1, which indicates that the motor has stopped.

Bit	Name	Value	Definition
12	speed	0	Motor is operating
		1	Motor is not operating

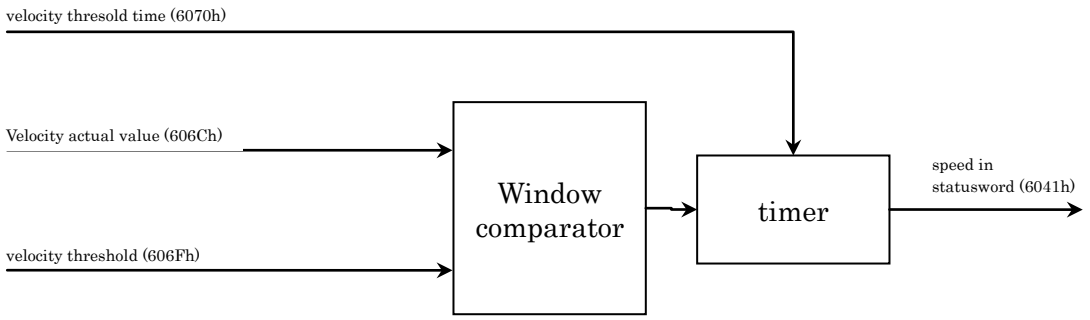

<Speed (functional overview)>

Index	Sub-Index	Name / Description	Units	Range	Data Type	Access	PDO	Op-mode	EEPROM
606Fh	00h	Velocity threshold	Command/s	0 - 65535	U16	rw	RxPDO	pv	Yes
		• Set the threshold where bit 12 (speed) of 6041h (Statusword) becomes 0 when 606Ch (Velocity actual value) exceeds the value set to this parameter and the time set in 6070h (Velocity threshold time) has elapsed. When the velocity becomes the value set in this parameter or less, bit 12 of 6041 (Statusword) changes to 1.							
6070h	00h	Velocity threshold time	1ms	0 - 65535	U16	rw	RxPDO	pv	Yes
		• Set the time from the point when 606Ch (Velocity actual value) exceeds the value set to 606Fh (Velocity threshold) until the point when bit 12 of 6041h (Statusword) changes to 0.							

3) Operations of pv mode

Profile velocity control mode generates a velocity command value according to the following parameters.

- Target velocity (60FFh)
- Velocity offset (60B1h)
- Profile acceleration (6083h)
- Profile deceleration (6084h)

Target velocity is additional value of the 60FFh (Target velocity) and 60B1h(Velocity offset).

For the operation command update (transmission), do input when approx. 100 ms has elapsed after the servo ON(Operation enabled command).

There are various sensors for velocity detection. The MINAS-A6B series detects the position and velocity by using an encoder (position sensor).

As the monitoring function, the Velocity actual value (606Ch) provides the information to host controller.

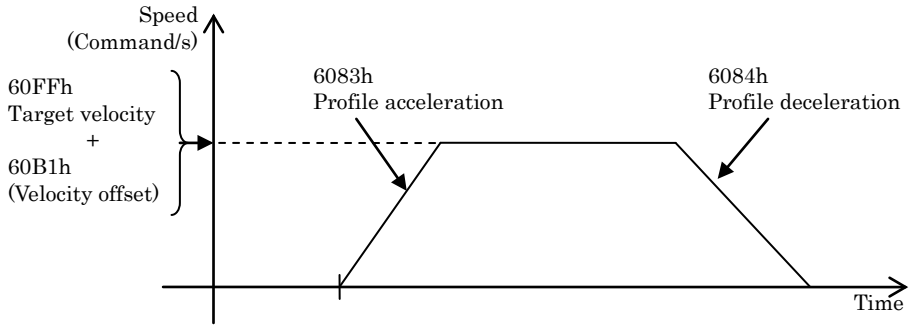

Note) - The sum of 60FFh (Target velocity) and 60B1h (Velocity offset) is limited by the smallest one out of 607Fh(Max profile velocity), 6080h (Max motor speed), 2147483647.
However, a change that is made to the value of 607Fh(Max profile velocity) and 6080h (Max motor speed) during operation will not be reflected in that operation.

6-7-3 Cyclic Velocity Mode (csv mode)

It is a velocity control mode to operate by creating a command velocity in the host controller (master) and updating (transmitting) the command velocity in an interpolation cycle.
Use it in the DC or SM2 synchronization mode.

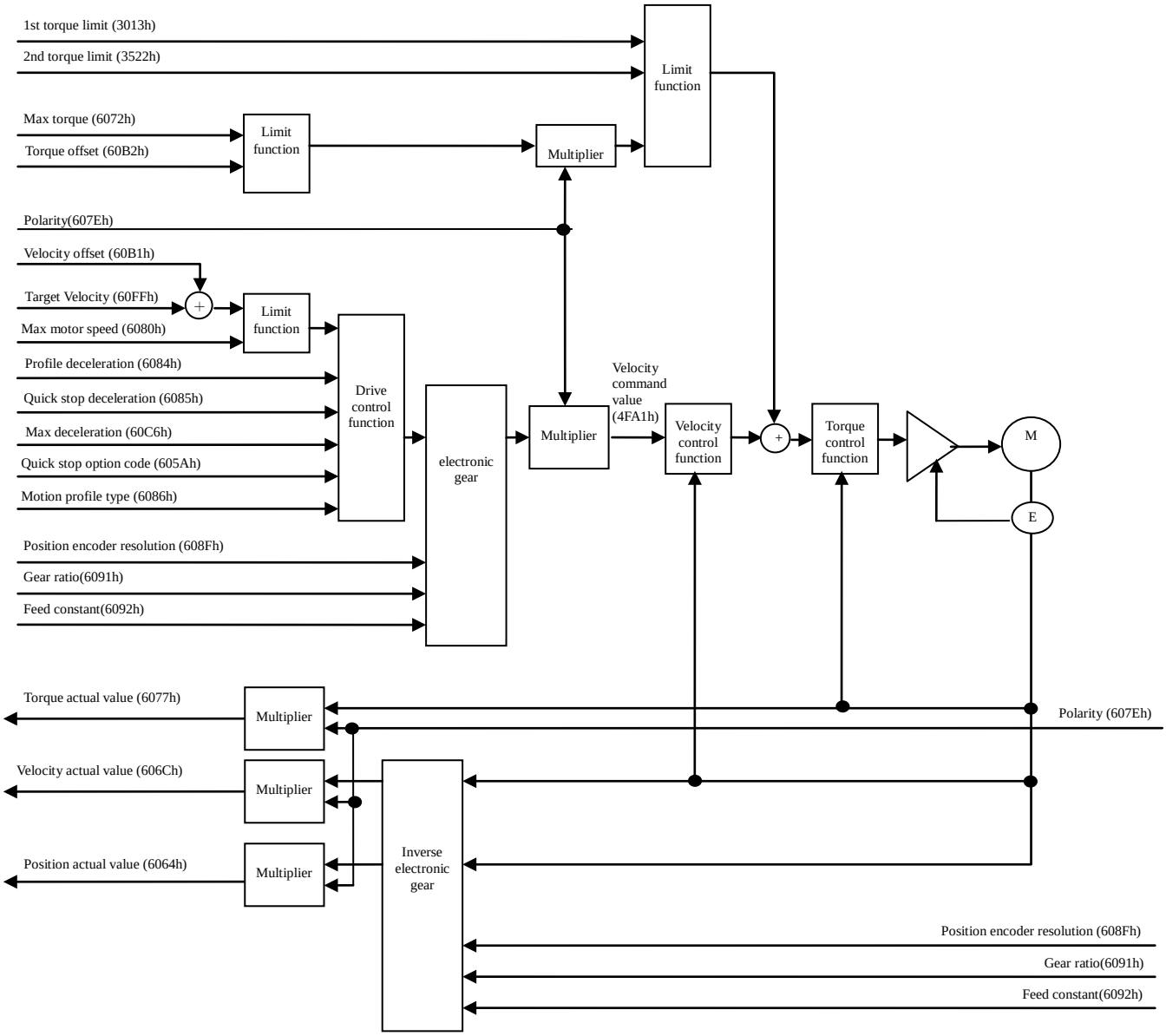

1) Objects related to csv mode (command & setup)

Index	Sub-Index	Name	Units	Range	Data Type	Access	PDO
6040h	00h	Controlword	-	0 - 65535	U16	rw	RxPDO
3724h	00h	Communication function extended setup 3	-	-32768 - 32767	I16	rw	No

- Besides, there are related objects common to the velocity control.
  For more information, refer to the section 6-7-1.

Index	Sub-Index	Name	Units	Range	Data Type	Access	PDO
6072h	00h	Max torque	0.1%	0 - 65535	U16	rw	RxPDO
6080h	00h	Max motor speed	r/min	0 - 4294967295	U32	rw	RxPDO
60B1h	00h	Velocity offset	Command/s	-2147483648 - 2147483647	I32	rw	RxPDO
60B2h	00h	Torque offset	0.1%	-32768 - 32767	I16	rw	RxPDO
60FFh	00h	Target velocity	Command/s	-2147483648 - 2147483647	I32	rw	No

- There is a related object of common motion as well.
  For more information, refer to the Chapter 6-9.

Index	Sub-Index	Name	Units	Range	Data Type	Access	PDO
6007h	00h	Abort connection option code	—	0 - 3	I16	rw	No
605Ah	00h	Quick stop option code	—	-2 - 7	I16	rw	No
605Bh	00h	Shutdown option code	—	0 - 1	I16	rw	No
605Ch	00h	Disable operation option code	—	0 - 1	I16	rw	No
605Dh	00h	Halt option code	—	1 - 3	I16	rw	No
605Eh	00h	Fault reaction option code	—	0 - 2	I16	rw	No
607Bh	-	Position range limit	-	-	-	-	-
	00h	Highest sub-index supported	-	2	U8	ro	No
	01h	Min position range limit	Command	-2147483648 – 2147483647	I32	rw	RxPDO
	02h	Max position range limit	Command	-2147483648 – 2147483647	I32	rw	RxPDO
607Ch	00h	Home offset	Command	-2147483648 – 2147483647	I32	rw	RxPDO
607Eh	00h	Polarity	-	0 – 255	U8	rw	No
6084h	00h	Profile deceleration	Command/s^2	0 – 4294967295	U32	rw	RxPDO
6085h	00h	Quick stop deceleration	Command/s^2	0 – 4294967295	U32	rw	RxPDO
608Fh	-	Position encoder resolution	-	-	-	-	-
	00h	Highest sub-index supported	-	2	U8	ro	No
	01h	Encoder increments	pulse	1 – 4294967295	U32	ro	No
	02h	Motor revolutions	r (motor)	1 – 4294967295	U32	ro	No
6091h	-	Gear ratio	-	-	-	-	-
	00h	Number of entries	-	2	U8	ro	No
	01h	Motor revolutions	r (motor)	1 – 4294967295	U32	rw	No
	02h	Shaft revolutions	r (shaft)	1 – 4294967295	U32	rw	No
6092h	-	Feed constant	-	-	-	-	-
	00h	Highest sub-index supported	-	2	U8	ro	No
	01h	Feed	Command	1 – 4294967295	U32	rw	No
	02h	Shaft revolutions	r (shaft)	1 – 4294967295	U32	rw	No
60B8h	00h	Touch probe function	-	0 - 65535	U16	rw	RxPDO
60C2h	-	Interpolation time period	-	-	-	-	-
	00h	Highest sub-index supported	-	2	U8	ro	No
	01h	Interpolation time period value	-	0 - 255	U8	rw	No
	02h	Interpolation time index	-	-128 – 63	I8	rw	No
60FEh	-	Digital outputs	-	-	-	-	-
	00h	Number of entries	-	2	U8	ro	No
	01h	Physical outputs	-	0 - 4294967295	U32	rw	RxPDO
	02h	Bit mask	-	0 - 4294967295	U32	rw	RxPDO

- Controlword (6040h) <Functions in csv mode>

Index	Sub-Index	Name / Description	Units	Range	Data Type	Access	PDO	Opmode	EEPROM
6040h	00h	Controlword	-	0 - 65535	U16	rw	RxPDO	ALL	No

• Set a command to a servo driver including the PDS state transition.

Bit information details

15 - 10	9	8	7	6	5	4	3	2	1	0
r	oms r	h	fr	oms r	r	r	eo	qs	ev	so

r	=reserved (not supported)	fr	= fault reset
oms	= operation mode specific (control mode dependent bit)	eo	= enable operation
		qs	= quick stop
h	= halt	ev	= enable voltage
		so	= switch on

Note: The csv mode does not use the oms bit.

- Other

Index	Sub-Index	Name / Description	Units	Range	Data Type	Access	PDO	Op-mode	EEPROM
3724h	00h	Communication function extended setup 3	—	-32768 - 32767	I16	rw	No	ALL	Yes

3724h bit11: The condition that 6041h bit12 (drive follows command value) will be 0.
0 : Limiting torque and speed limit (only cst) is included.
1 : Limiting torque and speed limit (only cst) is not included.

2) Objects related to csv mode (monitoring)

Index	Sub-Index	Name	Units	Range	Data Type	Access	PDO
6041h	00h	Statusword	-	0 - 65535	U16	ro	TxPDO

- Besides, there are related objects common to the velocity control.
  For more information, refer to section 6-7-1.

Index	Sub-Index	Name	Units	Range	Data Type	Access	PDO
6063h	00h	Position actual internal value	pulse	-2147483648 - 2147483647	I32	ro	TxPDO
6064h	00h	Position actual value	Command	-2147483648 - 2147483647	I32	ro	TxPDO
6069h	00h	Velocity sensor actual value	-	-2147483648 - 2147483647	I32	ro	TxPDO
606Bh	00h	Velocity demand value	Command/s	-2147483648 - 2147483647	I32	ro	TxPDO
606Ch	00h	Velocity actual value	Command/s	-2147483648 - 2147483647	I32	ro	TxPDO
6074h	00h	Torque demand	0.1%	-32768 – 32767	I16	ro	TxPDO
6076h	00h	Motor rated torque	mN･m	0 – 4294967295	U32	ro	TxPDO
6077h	00h	Torque actual value	0.1%	-32768 - 32767	I16	ro	TxPDO

- There is a related object of common motion as well.
  For more information, refer to Chapter 6-9.

Index	Sub-Index	Name	Units	Range	Data Type	Access	PDO
603Fh	00h	Error code	-	0 - 65535	U16	ro	TxPDO
60B9h	00h	Touch probe status	-	0 - 65535	U16	ro	TxPDO
60BAh	00h	Touch probe pos1 pos value	Command	-2147483648 – 2147483647	I32	ro	TxPDO
60BBh	00h	Touch probe pos1 neg value	Command	-2147483648 – 2147483647	I32	ro	TxPDO
60BCh	00h	Touch probe pos2 pos value	Command	-2147483648 – 2147483647	I32	ro	TxPDO
60BDh	00h	Touch probe pos2 neg value	Command	-2147483648 – 2147483647	I32	ro	TxPDO
60FDh	00h	Digital inputs	-	0 - 4294967295	U32	ro	TxPDO

- Statusword (6041h) <Functions in csv mode>

Index	Sub-Index	Name / Description	Units	Range	Data Type	Access	PDO	Opmode	EEPROM
6041h	00h	Statusword	-	0 - 65535	U16	ro	TxPDO	ALL	No

• Displays the servo driver state.

Bit information details

15 - 14	13	12	11	10	9	8	7	6	5	4	3	2	1	0
r	oms		ila	oms	rm	r	w	sod	qs	ve	f	oe	so	rtso
	r	drive follows command value		r										

r	= reserved(not supported)	w	= warning
		sod	= switch on disabled
oms	= operation mode specific (control mode dependent bit)	qs	= quick stop
		ve	= voltage enabled
ila	= internal limit active	f	= fault
		oe	= operation enabled
rm	= remote	so	= switched on
r	= reserved(not supported)	rtso	= ready to switch on

bit13,12,10(operation mode specific):

bit	Name	Value	Definition
10	reserved	-	Not used
12	drive follows command value	0	Operation is not performed according to the target velocity. *1)
		1	Operation is performed according to the target velocity. *1)
13	reserved	-	Not used

*1) "Operation is performed according to the target velocity" refers to cases where the following conditions are all satisfied:
- PDS state is Operation enabled
- While not in deceleration (Halt, POT/NOT, Quickstop, Shutdown, Disable operation and Fault)
- While not in Halt status
- POT not detected when a positive direction operation command is in process, or NOT not detected when a negative direction operation command is in process
- Torque limit has not occurred(Valid only when this condition 3724h-bit11 is 0)

Index	Sub-Index	Name / Description	Units	Range	Data Type	Access	PDO	Op-mode	EEPROM
3724h	00h	Communication function extended setup 3	—	-32768 - 32767	I16	rw	No	ALL	Yes

3724h bit11: The condition that 6041h bit12 (drive follows command value) will be 0.
0 : Limiting torque and speed limit (only cst) is included.
1 : Limiting torque and speed limit (only cst) is not included.

3) Operations of csv mode

- Motion profile (trajectory) generation is done in the master rather than the slave in the cyclic velocity control mode.
- Target velocity is additional value of 60FFh(Target velocity) and 60B1h(Velocity offset).
- For the operation command update (transmission), do input when approx. 100 ms has elapsed after the servo ON(Operation enabled command).
- 60C2h (Interpolation time period) indicates the cycle to update the two object for 60FFh(Target velocity) and 60B1h(Velocity offset).This value is set to the cycle which is the same as 1C32-02h(Cycle time).
- As monitoring information, we provide 606Ch(Velocity actual value) etc.

Note) - The sum of 60FFh (Target velocity) and 60B1h (Velocity offset) is limited by 6080h (Max motor speed) or 2147483647, whichever is smaaler.
However, a change that is made to the value of 6080h (Max motor speed) during operation will not be reflected in that operation.

6-8 Torque Control Function

6-8-1 Common Torque Control Function

1) Torque control block diagram

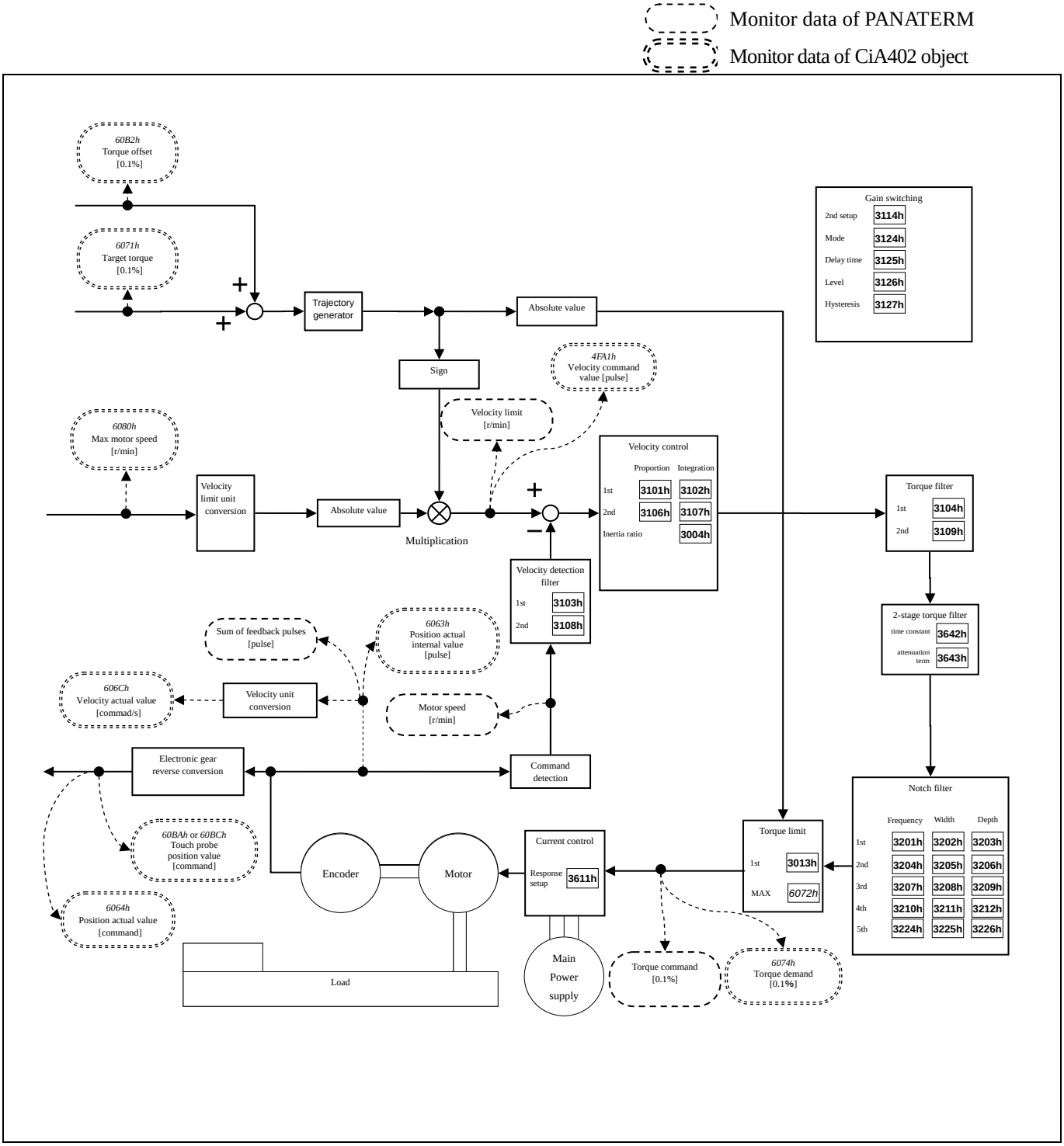

Torque control block diagram

*1) A slanting number (ex.:607Ah) shows the object number of EtherCAT.
*2) A bold letter number (ex.:**3100h**) shows a parameter number.
*3) Polarity was omitted.
*4) When performing Frequency characteristic measurement (Torque speed (normal)) from the PANATERM, the driver switches to torque control internally.

2) Related objects common in torque control (command & setup)

Index	Sub-Index	Name	Units	Range	Data Type	Access	PDO	Supported mode	
								tq	cst
6040h	00h	Controlword	-	0 - 65535	U16	rw	RxPDO	Yes	Yes
6071h	00h	Target torque	0.1%	-32768 - 32767	I16	rw	RxPDO	Yes	Yes
6072h	00h	Max torque	0.1%	0 - 65535	U16	rw	RxPDO	Yes	Yes
6080h	00h	Max motor speed	r/min	0 - 4294967295	U32	rw	RxPDO	Yes	Yes
6087h	00h	Target slope	0.1%/s	0 - 4294967295	U32	rw	RxPDO	Yes	Yes
60B2h	00h	Torque offset	0.1%	-32768 - 32767	I16	rw	RxPDO	Yes	Yes

- Besides, there are related objects for each control mode.
  Refer to the section "Related objects" of each control mode.

- The function of 6040h (Control word) can differ according to the control mode.
  Refer to the section "Related objects" of each control mode.

- Velocity system

Index	Sub-Index	Name / Description	Units	Range	Data Type	Access	PDO	Op-mode	EEPROM
6080h	00h	Max motor speed	r/min	0 - 4294967295	U32	rw	RxPDO	ALL	Yes *1)
		• Set the maximum speed of motor. • The maximum value is limited by the maximum speed read out from the motor in internal processing. • At tq or cst, the speed is limited with the setting value of this object. *1) In the first edition of the software version (Ver1.01), it is not supported for backup to EEPROM. The maximum speed read from the motor is set when the control power is turned on In the enhanced software version 1 (Ver1.02) and later, it is supported for backup to EEPROM. The value stored in EEPROM is set when the control power is turned on.							

- Torque system

Index	Sub-Index	Name / Description	Units	Range	Data Type	Access	PDO	Op-mode	EEPROM
6071h	00h	Target torque	0.1%	-32768 - 32767	I16	rw	RxPDO	tq cst	Yes
		• Set the torque command in the torque profile mode (tq) and cyclic synchronous torque mode (cst). When the value exceeds 6072h (Max torque), the value is limited by 6072h.							
6072h	00h	Max torque	0.1%	0 - 65535	U16	rw	RxPDO	ALL	Yes
		• Set the maximum torque of the motor. • The maximum value is limited by the maximum torque read out from the motor in internal processing. • The maximum torque of the motor varies with the motor applied.							
6087h	00h	Torque slope	0.1%/s	0 - 4294967295	U32	rw	RxPDO	tq cst	Yes
		• Set a parameter value for giving slope to a torque command. • In the cyclic synchronous torque mode (cst), torque slope is effective only during the deceleration stop sequence. • When 0 has been set, the setting is regarded as 1 internally.							
60B2h	00h	Torque offset	0.1%	-32768 - 32767	I16	rw	RxPDO	ALL	Yes
		• Set the offset of a torque command (torque feedforward). • During slowdown in over-travel inhibition(in emergncy stop), the torque feedforward level becomes 0.							

- Other

Index	Sub-Index	Name / Description	Units	Range	Data Type	Access	PDO	Op-mode	EEPROM
3724h	00h	Communication function extended setup 3	—	-32768 - 32767	I16	rw	No	ALL	Yes
		bit7 : Internal value state selection of objects 60B2h(Torque offset) in servo-off (Fall prevention function in the event of Servo-ON) 0: Clear 1: Updated with the set value of 60B2h							

3) Related objects common in torque control (monitoring)

Index	Sub-Index	Name	Units	Range	Data Type	Access	PDO	Supported mode	
								tq	cst
4D29h *2)	00h	Over load factor	0.1%	0 - 65535	U16	ro	TxPDO	Yes	Yes
4F0Dh	00h	External scale position	pulse (external scale)	-2147483648 - 2147483647	I32	ro	TxPDO	Yes	Yes
4F11h	00h	Regenerative load ratio	%	-2147483648 - 2147483647	I32	ro	TxPDO	Yes	Yes
4F31h	00h	Inertia ratio	%	-2147483648 - 2147483647	I32	ro	No	Yes	Yes
4F41h	00h	Number of entries	-	2	U8	ro	No	Yes	Yes
	01h	Mechanical angle (Single-turn data)	pulse	-2147483648 - 2147483647	I32	ro	TxPDO *1)	Yes	Yes
	02h	Multi-turn data	rotation	-2147483648 - 2147483647	I32	ro	TxPDO *1)	Yes	Yes
4F42h	00h	Electrical angle	0.0879°	-2147483648 - 2147483647	I32	ro	No	Yes	Yes
4F48h	00h	External scale pulse total	pulse (external scale)	-2147483648 - 2147483647	I32	ro	TxPDO	Yes	Yes
4F49h	00h	External scale absolute position	pulse (external scale)	-2147483648 - 2147483647	I32	ro	TxPDO	Yes	Yes
4F87h	00h	External scale data (Higher)	pulse (external scale)	-2147483648 - 2147483647	I32	ro	TxPDO	Yes	Yes
4F88h	00h	External scale data (Lower)	pulse (external scale)	-2147483648 - 2147483647	I32	ro	TxPDO	Yes	Yes
4FA1h	00h	Velocity command value	r/min	-2147483648 - 2147483647	I32	ro	TxPDO	Yes	Yes
4FA8h	00h	Positive direction torque limit value	0.05%	-2147483648 - 2147483647	I32	ro	TxPDO	Yes	Yes
4FA9h	00h	Negative direction torque limit value	0.05%	-2147483648 - 2147483647	I32	ro	TxPDO	Yes	Yes
6041h	00h	Statusword	-	0 - 65535	U16	ro	TxPDO	Yes	Yes
6063h	00h	Position actual internal value	pulse	-2147483648 - 2147483647	I32	ro	TxPDO	Yes	Yes
6064h	00h	Position actual value	command	-2147483648 – 2147483647	I32	ro	TxPDO	Yes	Yes
6069h	00h	Velocity sensor actual value	-	-2147483648 - 2147483647	I32	ro	TxPDO	Yes	Yes
606Ch	00h	Velocity actual value	command/s	-2147483648 - 2147483647	I32	ro	TxPDO	Yes	Yes
6074h	00h	Torque demand	0.1%	-32768 - 32767	I16	ro	TxPDO	Yes	Yes
6075h	00h	Motor rated current	mA	0 – 4294967295	U32	ro	No	Yes	Yes
6076h	00h	Motor rated torque	mN･m	0 – 4294967295	U32	ro	No	Yes	Yes
6077h	00h	Torque actual value	0.1%	-32768 - 32767	I16	ro	TxPDO	Yes	Yes
6078h	00h	Current actual value	0.1%	-32768 - 32767	I16	ro	TxPDO	Yes	Yes
6079h	00h	DC link circuit voltage	mV	0 - 4294967295	U32	ro	TxPDO	Yes	Yes

*1) The first edition of the software version (Ver1.01) does not support TxPDO of 4F41h-01h and 4F41h-02h.

*2) It is not supported in software versions corresponding to function extended edition 1 (Ver1.02) or earlier.

- Besides, there are related objects for each control mode.
  Refer to the section "Related objects" of each control mode.

- The function of 6041h (Status word) can differ according to each control mode.
  Refer to the section "Related objects" of each control mode.

- Position system

Index	Sub-Index	Name / Description	Units	Range	Data Type	Access	PDO	Op-mode	EEPROM
4F0Dh	00h	External scale position	pulse (external scale)	-2147483648 - 2147483647	I32	ro	TxPDO	ALL	No
		・Position of the external scale is displayed.							
4F41h	-	Motor encoder data	-	-	-	-	-	-	-
		・Position information is displayed.							
	00h	Number of entries	-	2	U8	ro	No	ALL	No
		・The number of Sub-Index of 4F41h (Motor encoder data) is displayed.							
	01h	Mechanical angle (Single-turn data)	pulse	-2147483648 - 2147483647	I32	ro	TxPDO	ALL	No
		・Motor mechanical angle (encoder single-turn data) is displayed. (Note) The first edition of the software version (Ver1.01) does not support TxPDO.							
	02h	Multi-turn data	rotation	-2147483648 - 2147483647	I32	ro	TxPDO	ALL	No
		・Multi-turn data of the absolute encoder is displayed. (Note) The first edition of the software version (Ver1.01) does not support TxPDO.							
4F42h	00h	Electrical angle	0.0879°	-2147483648 - 2147483647	I32	ro	No	ALL	No
		・The electrical angle of the motor is displayed.							
4F48h	00h	External scale pulse total	pulse (external scale)	-2147483648 – 2147483647	I32	ro	TxPDO	ALL	No
		・Sum of external scale pulse counts is displayed.							
4F49h	00h	External scale absolute position	pulse (external scale)	-2147483648 – 2147483647	I32	ro	TxPDO	ALL	No
		・Absolute position of the external scale is displayed.							
4F87h	00h	External scale data (Higher)	pulse (external scale)	-2147483648 – 2147483647	I32	ro	TxPDO	ALL	No
		・Higher 24 bits of external scale data is displayed.							
4F88h	00h	External scale data (Lower)	pulse (external scale)	-2147483648 – 2147483647	I32	ro	TxPDO	ALL	No
		・Lower 24 bits of external scale data is displayed.							
6063h	00h	Position actual internal value	pulse	-2147483648 - 2147483647	I32	ro	TxPDO	ALL	No
		• Displays the actual position of the motor. The value is on an encoder basis during other than full-closed control, and on an external scale basis during full-closed control.							
6064h	00h	Position actual value	Command	-2147483648 – 2147483647	I32	ro	TxPDO	ALL	No
		• Displays the actual position of the motor. Under full-closed control, this is the external scale position.							

- Velocity system

Index	Sub-Index	Name / Description	Units	Range	Data Type	Access	PDO	Op-mode	EEPROM
4FA1h	00h	Velocity command value	r/min	-2147483648 - 2147483647	I32	ro	TxPDO	ALL	No
		・Velocity control command is displayed.							
6069h	00h	Velocity sensor actual value	—	-2147483648 – 2147483647	I32	ro	TxPDO	ALL	No
		• Indicate sensor value of actual velocity. Return 0 always because this servo driver not supported.							
606Ch	00h	Velocity actual value	Command/s	-2147483648 - 2147483647	I32	ro	TxPDO	ALL	No
		• Displays the actual velocity of the motor.							

- Torque system

Index	Sub-Index	Name / Description	Units	Range	Data Type	Access	PDO	Op-mode	EEPROM
4D29h	00h	Over load factor	0.1%	0 – 65535	U16	ro	TxPDO	ALL	No
		• The ratio [0.1%] to the rated load is displayed. (Note) It is not supported in software versions corresponding to function extended edition 1 (Ver1.02) or earlier.							
4F11h	00h	Regenerative load ratio	%	-2147483648 - 2147483647	I32	ro	TxPDO	ALL	No
		・Regenerative load ratio (ratio of the regenerative overload protection to the alarm occurrence level) is displayed.							
4F31h	00h	Inertia ratio	%	-2147483648 - 2147483647	I32	ro	No	ALL	No
		・Inertia ratio is displayed. The ratio of load inertia to the motor's rotor inertia (equivalent of value of 3004h) Inertia ratio = (load inertia/rotor inertia) x 100							
4FA8h	00h	Positive direction torque limit value	0.05%	-2147483648 - 2147483647	I32	ro	TxPDO	ALL	No
		・Positive direction torque limit value is displayed.							
4FA9h	00h	Negative direction torque limit value	0.05%	-2147483648 - 2147483647	I32	ro	TxPDO	ALL	No
		・Negative direction torque limit value is displayed.							
6074h	00h	Torque demand	0.1%	-32768 - 32767	I16	ro	TxPDO	ALL	No
		• Displays internal command torque.							
6075h	00h	Motor rated current	mA	0 – 4294967295	U32	ro	No	ALL	No
		• Automatically set the rated current of motor.							
6076h	00h	Motor rated torque	mN・m	0 – 4294967295	U32	ro	No	ALL	No
		• Automatically set the rated torque of motor.							
6077h	00h	Torque actual value	0.1%	-32768 - 32767	I16	ro	TxPDO	ALL	No
		• Displays the actual torque. • It becomes a value equivalent to actual current value. • This output value is a reference value and does not guarantee an actual value.							
6078h	00h	Current actual value	0.1%	-32768 - 32767	I16	ro	TxPDO	ALL	No
		• Displays actual current value.							
6079h	00h	DC link circuit voltage	mV	0 - 4294967295	U32	ro	TxPDO	ALL	No
		• Displays the PN voltage in the main circuit power.							

6-8-2 Profile Torque Mode (tq mode)

It is a torque control mode to operate by designating the target torque, addition-subtraction velocity, etc. and creating a position command in the servo driver.
In this control mode, please use the communication cycle of 250μs or more.

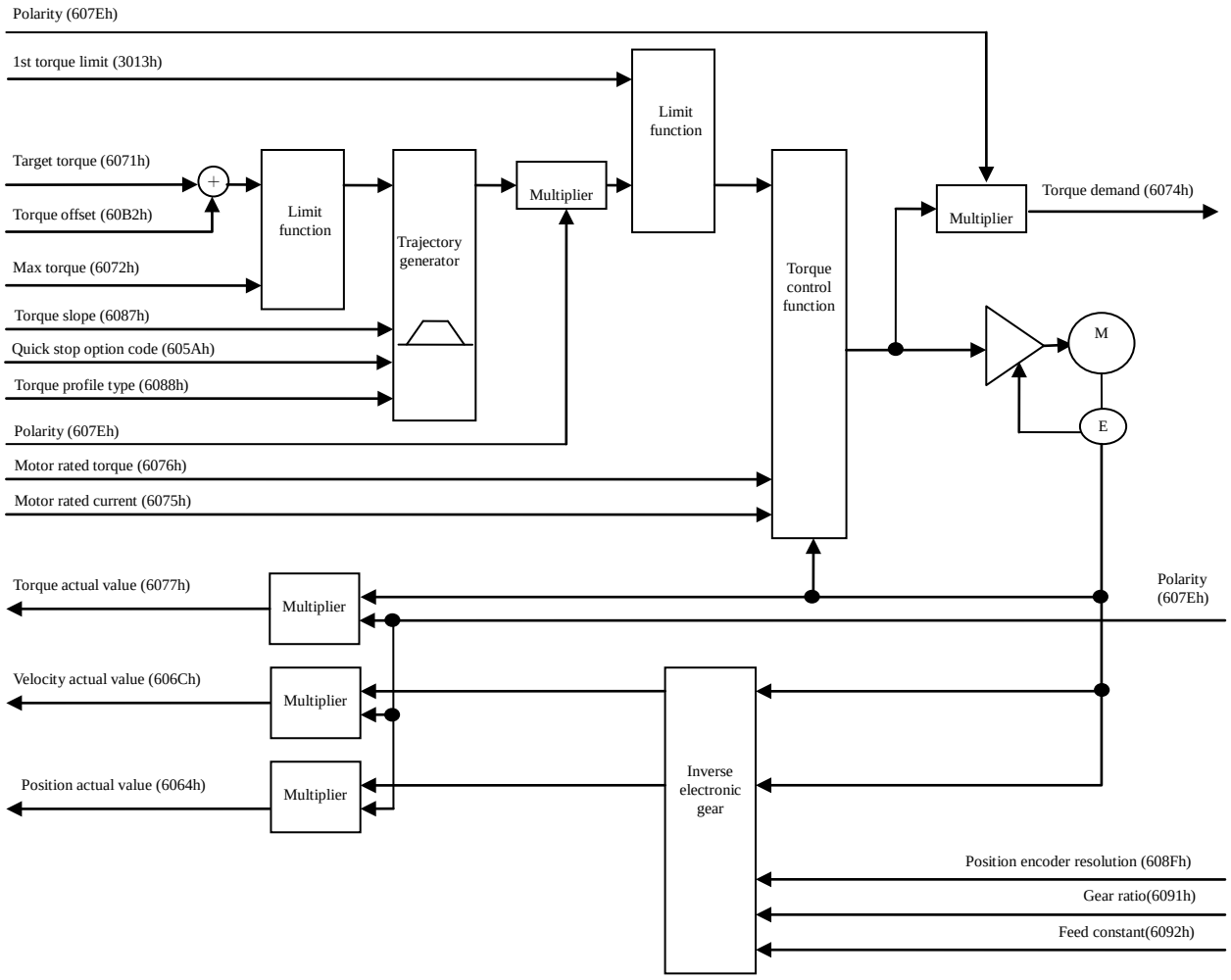

1) Objects related to tq mode (command & setup)

Index	Sub-Index	Name	Units	Range	Data Type	Access	PDO
6040h	00h	Controlword	-	0 - 65535	U16	rw	RxPDO
6088h	00h	Torque profile type	-	-32768 - 32767	I16	rw	RxPDO

- Besides, there are related objects common to the torque control.
  For more information, refer to section 6-8-1.

Index	Sub-Index	Name	Units	Range	Data Type	Access	PDO
6071h	00h	Target torque	0.1%	-32768 - 32767	I16	rw	RxPDO
6072h	00h	Max torque	0.1%	0 - 65535	U16	rw	RxPDO
6080h	00h	Max motor speed	r/min	0 - 4294967295	U32	rw	RxPDO
6087h	00h	Target slope	0.1%/s	0 - 4294967295	U32	rw	RxPDO
60B2h	00h	Torque offset	0.1%	-32768 - 32767	I16	rw	RxPDO

- There is a related object of common motion as well.
  For more information, refer to Chapter 6-9.

Index	Sub-Index	Name	Units	Range	Data Type	Access	PDO
6007h	00h	Abort connection option code	-	0 - 3	I16	rw	No
605Ah	00h	Quick stop option code	-	-2 - 7	I16	rw	No
605Bh	00h	Shutdown option code	-	0 - 1	I16	rw	No
605Ch	00h	Disable operation option code	-	0 - 1	I16	rw	No
605Dh	00h	Halt option code	-	1 - 3	I16	rw	No
605Eh	00h	Fault reaction option code	-	0 - 2	I16	rw	No
607Bh	-	Position range limit	-	-	-	-	-
	00h	Highest sub-index supported	-	2	U8	ro	No
	01h	Min position range limit	Command	-2147483648 – 2147483647	I32	rw	RxPDO
	02h	Max position range limit	Command	-2147483648 – 2147483647	I32	rw	RxPDO
607Ch	00h	Home offset	Command	-2147483648 – 2147483647	I32	rw	RxPDO
607Eh	00h	Polarity	-	0 – 255	U8	rw	No
608Fh	-	Position encoder resolution	-	-	-	-	-
	00h	Highest sub-index supported	-	2	U8	ro	No
	01h	Encoder increments	pulse	1 – 4294967295	U32	ro	No
	02h	Motor revolutions	r (motor)	1 – 4294967295	U32	ro	No
6091h	-	Gear ratio	-	-	-	-	-
	00h	Number of entries	-	2	U8	ro	No
	01h	Motor revolutions	r (motor)	1 – 4294967295	U32	rw	No
	02h	Shaft revolutions	r (shaft)	1 – 4294967295	U32	rw	No
6092h	-	Feed constant	-	-	-	-	-
	00h	Highest sub-index supported	-	2	U8	ro	No
	01h	Feed	Command	1 – 4294967295	U32	rw	No
	02h	Shaft revolutions	r (shaft)	1 – 4294967295	U32	rw	No
60B8h	00h	Touch probe function	-	0 - 65535	U16	rw	RxPDO
60FEh	-	Digital outputs	-	-	-	-	-
	00h	Number of entries	-	2	U8	ro	No
	01h	Physical outputs	-	0 - 4294967295	U32	rw	RxPDO
	02h	Bit mask	-	0 - 4294967295	U32	rw	RxPDO

- Controlword (6040h) <Functions in tq mode>

Index	Sub-Index	Name / Description	Units	Range	Data Type	Access	PDO	Op-mode	EEPROM
6040h	00h	Controlword	-	0 - 65535	U16	rw	RxPDO	ALL	No

• Set a command to a servo driver including the PDS state transition.

Bit information details

15 - 10	9	8	7	6	5	4	3	2	1	0
r	oms r	h	fr	oms r	r	r	eo	qs	ev	so

r	= reserved (not supported)	fr	= fault reset
oms	= operation mode specific (control mode dependent bit)	eo	= enable operation
		qs	= quick stop
h	= halt	ev	= enable voltage
		so	= switch on

* Note: The tq mode does not use the oms bit.

- Torque system

Index	Sub-Index	Name / Description	Units	Range	Data Type	Access	PDO	Op-mode	EEPROM
6087h	00h	Torque slope	0.1%/s	0 - 4294967295	U32	Rw	RxPDO	tq cst	Yes
		• Set a parameter value for giving slope to a torque command. • In the cyclic synchronous torque mode (cst), torque slope is effective only during the deceleration stop sequence. • When 0 has been set, the setting is regarded as 1 internally.							
6088h	00h	Torque profile type	-	-32768 - 32767	I16	rw	RxPDO	tq	Yes
		• Set the torque profile type used for changing the torque. 0: Linear slope 1: Not supported (sin^2 slope)							

2) Related objects (monitoring)

Index	Sub-Index	Name	Units	Range	Data Type	Access	PDO
6041h	00h	Statusword	-	0 - 65535	U16	ro	TxPDO
6073h	00h	Max current	0.1%	0 – 65535	U16	ro	No

- Besides, there are related objects common to the torque control.
  For more information, refer to section 6-8-1.

Index	Sub-Index	Name	Units	Range	Data Type	Access	PDO
6063h	00h	Position actual internal value	pulse	-2147483648 - 2147483647	I32	ro	TxPDO
6064h	00h	Position actual value	command	-2147483648 – 2147483647	I32	ro	TxPDO
6069h	00h	Velocity sensor actual value	-	-2147483648 - 2147483647	I32	ro	TxPDO
606Ch	00h	Velocity actual value	command/s	-2147483648 – 2147483647	I32	ro	TxPDO
6074h	00h	Torque demand	0.1%	-32768 - 32767	I16	ro	TxPDO
6075h	00h	Motor rated current	mA	0 – 4294967295	U32	ro	No
6076h	00h	Motor rated torque	mNm	0 – 4294967295	U32	ro	No
6077h	00h	Torque actual value	0.1%	-32768 - 32767	I16	ro	TxPDO
6078h	00h	Current actual value	0.1%	-32768 - 32767	I16	ro	TxPDO
6079h	00h	DC link circuit voltage	mV	0 - 4294967295	U32	ro	TxPDO

- There is a related object of common motion as well.
  For more information, refer to Chapter 6-9.

Index	Sub-Index	Name	Units	Range	Data Type	Access	PDO
603Fh	00h	Error code	-	0 - 65535	U16	ro	TxPDO
60B9h	00h	Touch probe status	-	0 - 65535	U16	ro	TxPDO
60BAh	00h	Touch probe pos1 pos value	command	-2147483648 – 2147483647	I32	ro	TxPDO
60BBh	00h	Touch probe pos1 neg value	command	-2147483648 – 2147483647	I32	ro	TxPDO
60BCh	00h	Touch probe pos2 pos value	command	-2147483648 – 2147483647	I32	ro	TxPDO
60BDh	00h	Touch probe pos2 neg value	command	-2147483648 – 2147483647	I32	ro	TxPDO
60FDh	00h	Digital inputs	-	0 - 4294967295	U32	ro	TxPDO

- Statusword (6041h) <Functions in tq mode>

Index	Sub-Index	Name / Description	Units	Range	Data Type	Access	PDO	Op-mode	EEPROM
6041h	00h	Statusword	-	0 - 65535	U16	ro	TxPDO	ALL	No
		• Displays the servo driver state.							

Bit information details

15 - 14	13	12	11	10	9	8	7	6	5	4	3	2	1	0
r	oms r	r	ila	oms target reached	rm	r	w	sod	qs	ve	f	oe	so	rtso

r = reserved(not supported)

oms = operation mode specific (control mode dependent bit)

ila = internal limit active

rm = remote

w = warning

sod = switch on disabled

qs = quick stop

ve = voltage enabled

f = fault

oe = operation enabled

so = switched on

rtso = ready to switch on

bit13,12,10(operation mode specific):

bit	Name	Value	Definition
10	target reached	0	halt=0 (during normal operation) : 6074h (Torque demand) has not yet reached target torque. halt=1 (during stop by halt) : During axis deceleration
		1	halt=0 (during normal operation) : 6074h (Torque demand) has reached target torque. halt=1 (during stop by halt) : Axis stop (Axis speed is 0.)
12	(reserved)	-	Not used
13	(reserved)	-	Not used

- Torque system

Index	Sub-Index	Name / Description	Units	Range	Data Type	Access	PDO	Op-mode	EEPROM
6073h	00h	Max current	0.1%	0 - 65535	U16	rw	No	tq	No
		• Displays the maximum current.							

3) Operations of tq mode

Profile torque control mode generates a torque command value according to the following parameters.

- Target torque(6071h)
- Torque offset(60B2h)
- Torque slope(6087h)

Target torque is additional value of 6071h(Target torque) and 60B2h(Torque offset).

For the operation command update (transmission), do input when approx. 100 ms has elapsed after the servo ON(Operation enabled command).

As monitoring information, we provide 6077h (Torque actual value) etc.

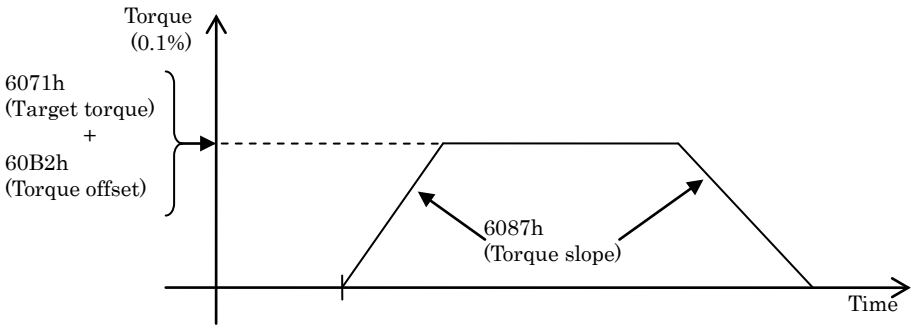

Note) - The sum of 6071h (Target torque) and 60B2h (Torque offset) is limited by the lowest value among 6072h (Max torque) and 3013h (1st torque limit).

- The velocity is limited by 6080h (Max motor speed).

- Even if these setting values are changed during operation, they are not reflected during the operation.

6-8-3 Cyclic Torque Mode (cst mode)

It is a torque control mode to operate by creating a command torque in the host controller (master) and updating (transmitting) the command torque in an interpolation cycle.
Use it in the DC or SM2 synchronization mode.

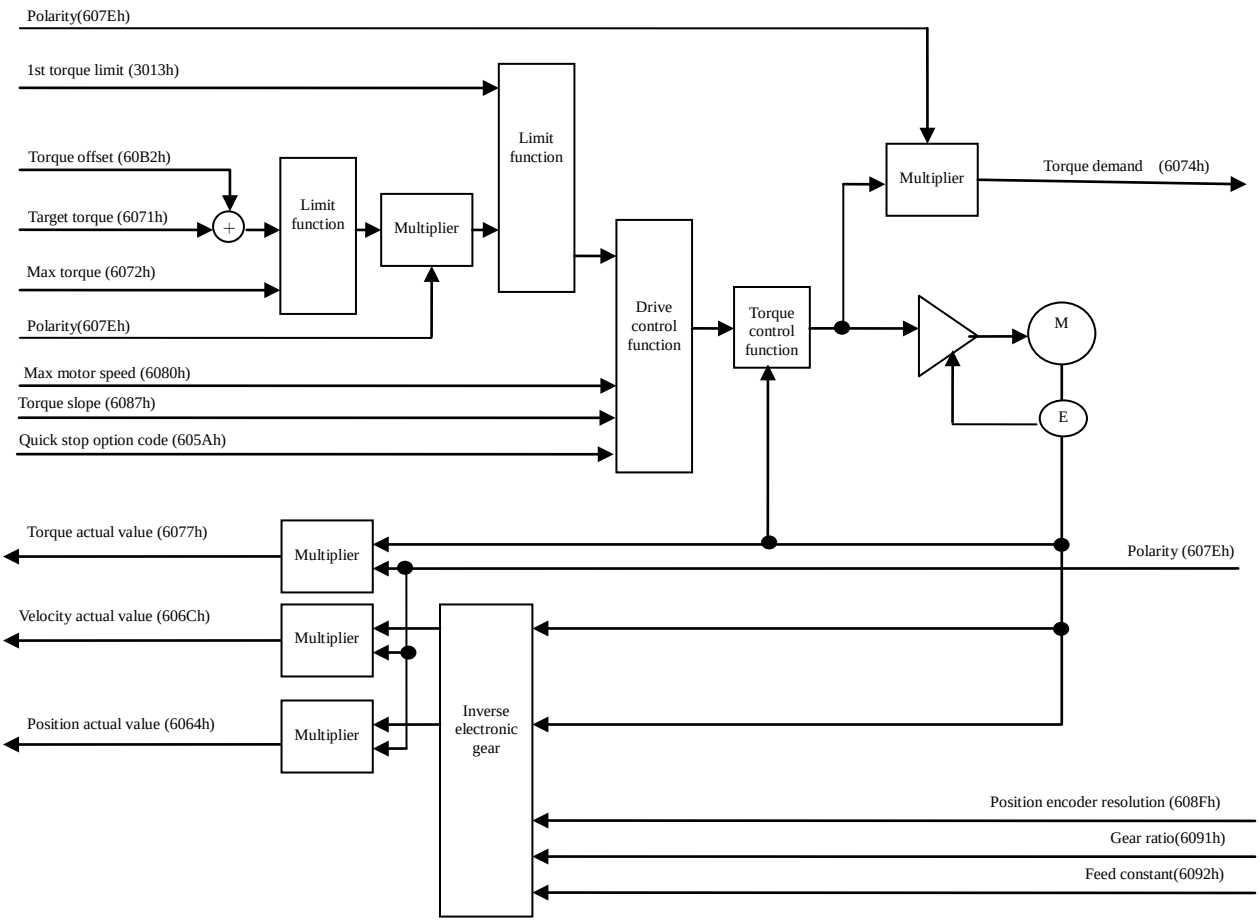

1) Objects related to cst mode (command & setup)

Index	Sub-Index	Name	Units	Range	Data Type	Access	PDO
6040h	00h	Controlword	-	0 - 65535	U16	rw	RxPDO
3724h	00h	Communication function extended setup 3	-	-32768 - 32767	I16	rw	No

- Besides, there are related objects common to the torque control.
  For more information, refer to section 6-8-1.

Index	Sub-Index	Name	Units	Range	Data Type	Access	PDO
6071h	00h	Target torque	0.1%	-32768 - 32767	I16	rw	RxPDO
6072h	00h	Max torque	0.1%	0 - 65535	U16	rw	RxPDO
6080h	00h	Max motor speed	r/min	0 - 4294967295	U32	rw	RxPDO
6087h	00h	Target slope	0.1%/s	0 - 4294967295	U32	rw	RxPDO
60B2h	00h	Torque offset	0.1%	-32768 - 32767	I16	rw	RxPDO

- There is a related object of common motion as well.
  For more information, refer to Chapter 6-9.

Index	Sub-Index	Name	Units	Range	Data Type	Access	PDO
6007h	00h	Abort connection option code	-	0 - 3	I16	rw	No
605Ah	00h	Quick stop option code	-	-2 - 7	I16	rw	No
605Bh	00h	Shutdown option code	-	0 - 1	I16	rw	No
605Ch	00h	Disable operation option code	-	0 - 1	I16	rw	No
605Dh	00h	Halt option code	-	1 - 3	I16	rw	No
605Eh	00h	Fault reaction option code	-	0 - 2	I16	rw	No
607Bh	-	Position range limit	-	-	-	-	-
	00h	Highest sub-index supported	-	2	U8	ro	No
	01h	Min position range limit	Command	-2147483648 – 2147483647	I32	rw	RxPDO
	02h	Max position range limit	Command	-2147483648 – 2147483647	I32	rw	RxPDO
607Ch	00h	Home offset	Command	-2147483648 – 2147483647	I32	rw	RxPDO
607Eh	00h	Polarity	-	0 – 255	U8	rw	No
608Fh	-	Position encoder resolution	-	-	-	-	-
	00h	Highest sub-index supported	-	2	U8	ro	No
	01h	Encoder increments	pulse	1 – 4294967295	U32	ro	No
	02h	Motor revolutions	r (motor)	1 – 4294967295	U32	ro	No
6091h	-	Gear ratio	-	-	-	-	-
	00h	Number of entries	-	2	U8	ro	No
	01h	Motor revolutions	r (motor)	1 – 4294967295	U32	rw	No
	02h	Shaft revolutions	r (shaft)	1 – 4294967295	U32	rw	No
6092h	-	Feed constant	-	-	-	-	-
	00h	Highest sub-index supported	-	2	U8	ro	No
	01h	Feed	Command	1 – 4294967295	U32	rw	No
	02h	Shaft revolutions	r (shaft)	1 – 4294967295	U32	rw	No
60B8h	00h	Touch probe function	-	0 - 65535	U16	rw	RxPDO
60C2h	-	Interpolation time period	-	-	-	-	-
	00h	Highest sub-index supported	-	2	U8	ro	No
	01h	Interpolation time period value	-	0 - 255	U8	rw	No
	02h	Interpolation time index	-	-128 – 63	I8	rw	No
60FEh	-	Digital outputs	-	-	-	-	-
	00h	Number of entries	-	2	U8	ro	No
	01h	Physical outputs	-	0 - 4294967295	U32	rw	RxPDO
	02h	Bit mask	-	0 - 4294967295	U32	rw	RxPDO

- Controlword (6040h) <Functions in cst mode>

Index	Sub-Index	Name / Description	Units	Range	Data Type	Access	PDO	Opmode	EEPROM
6040h	00h	Controlword	-	0 - 65535	U16	rw	RxPDO	ALL	No

• Set a command to a servo driver including the PDS state transition.

Bit information details

15 - 10	9	8	7	6	5	4	3	2	1	0
r	oms r	h	fr	oms r	r	r	eo	qs	ev	so

r	= reserved (Not supported)	fr	= fault reset
oms	= operation mode specific (control mode dependent bit)	eo	= enable operation
		qs	= quick stop
h	= halt	ev	= enable voltage
		so	= switch on

*Note: The cst mode does not use the oms bit.

- Other

Index	Sub-Index	Name / Description	Units	Range	Data Type	Access	PDO	Op-mode	EEPROM
3724h	00h	Communication function extended setup 3	—	-32768 - 32767	I16	rw	No	ALL	Yes

3724h bit11: The condition that 6041h bit12 (drive follows command value) will be 0.
0 : Limiting torque and speed limit (only cst) is included.
1 : Limiting torque and speed limit (only cst) is not included.

2) Objects related to cst mode (monitoring)

Index	Sub-Index	Name	Units	Range	Data Type	Access	PDO
6041h	00h	Statusword	-	0 - 65535	U16	ro	TxPDO

- Besides, there are related objects common to the torque control.
  For more information, refer to section 6-8-1.

Index	Sub-Index	Name	Units	Range	Data Type	Access	PDO
6063h	00h	Position actual internal value	pulse	-2147483648 - 2147483647	I32	ro	TxPDO
6064h	00h	Position actual value	Command	-2147483648 - 2147483647	I32	ro	TxPDO
6069h	00h	Velocity sensor actual value	-	-2147483648 - 2147483647	I32	ro	TxPDO
606Ch	00h	Velocity actual value	Command/s	-2147483648 - 2147483647	I32	ro	TxPDO
6074h	00h	Torque demand	0.1%	-32768 - 32767	I16	ro	TxPDO
6075h	00h	Motor rated current	mA	0 – 4294967295	U32	ro	No
6076h	00h	Motor rated torque	mN･m	0 – 4294967295	U32	ro	No
6077h	00h	Torque actual value	0.1%	-32768 - 32767	I16	ro	TxPDO
6078h	00h	Current actual value	0.1%	-32768 - 32767	I16	ro	TxPDO
6079h	00h	DC link circuit voltage	mV	0 - 4294967295	U32	ro	TxPDO

- There is a related object of common motion as well.
  For more information, refer to Chapter 6-9.

Index	Sub-Index	Name	Units	Range	Data Type	Access	PDO
603Fh	00h	Error code	-	0 - 65535	U16	ro	TxPDO
60B9h	00h	Touch probe status	-	0 - 65535	U16	ro	TxPDO
60BAh	00h	Touch probe pos1 pos value	Command	-2147483648 – 2147483647	I32	ro	TxPDO
60BBh	00h	Touch probe pos1 neg value	Command	-2147483648 – 2147483647	I32	ro	TxPDO
60BCh	00h	Touch probe pos2 pos value	Command	-2147483648 – 2147483647	I32	ro	TxPDO
60BDh	00h	Touch probe pos2 neg value	Command	-2147483648 – 2147483647	I32	ro	TxPDO
60FDh	00h	Digital inputs	-	0 - 4294967295	U32	ro	TxPDO

- Statusword (6041h) <Functions in cst mode>

Index	Sub-Index	Name / Description	Units	Range	Data Type	Access	PDO	Opmode	EEPROM
6041h	00h	Statusword	-	0 - 65535	U16	ro	TxPDO	ALL	No

• Displays the servo driver state.

Bit information details

15 - 14	13	12	11	10	9	8	7	6	5	4	3	2	1	0
r	oms		ila	oms	rm	r	w	sod	qs	ve	f	oe	so	rtso
	r	drive follows command value		r										

r = reserved(Not supported)

oms = operation mode specific (control mode dependent bit)

ila = internal limit active

rm = remote

w = warning

sod = switch on disabled

qs = quick stop

ve = voltage enabled

f = fault

oe = operation enabled

so = switched on

rtso = ready to switch on

bit13,12,10(operation mode specific):

bit	Name	Value	Definition
10	reserved	-	Not used
12	Drive follows command value	0	Operation is not performed according to the target torque. *1)
		1	Operation is performed according to the target torque. *1)
13	reserved	-	Not used

*1) “Operation is performed according to the target torque” refers to cases where the following conditions are all satisfied:

- PDS state is Operation enabled
- While not in deceleration (Halt, POT/NOT, Quickstop, Shutdown, Disable operation and Fault)
- While not in Halt status
- POT not detected when a positive direction operation command is in process, or NOT not detected when a negative direction operation command is in process
- Torque limit has not occurred(Valid only when this condition 3724h-bit11 is 0)
- Velocity limit has not occurred(Valid only when this condition 3724h-bit11 is 0)

Index	Sub-Index	Name / Description	Units	Range	Data Type	Access	PDO	Op-mode	EEPROM
3724h	00h	Communication function extended setup 3	—	-32768 - 32767	I16	rw	No	ALL	Yes

3724h bit11: The condition that 6041h bit12 (drive follows command value) will be 0.
0 : Limiting torque and speed limit (only cst) is included.
1 : Limiting torque and speed limit (only cst) is not included.

3) Operations of cst mode

- Motion profile (trajectory) generation is done by the master, not the slave in cyclic torque control mode.
- Target torque is additional value of 6071h(Target torque) and 60B2h(Torque offset).
- For the operation command update (transmission), do input when approx. 100 ms has elapsed after the servo ON(Operation enabled command).
- 60C2h (Interpolation time period) indicates the cycle to update the two object for 6071h (Target torque) and 60B2h (Torque offset).This value is set to the cycle which is the same as 1C32-02h(Cycle time).
- As monitoring information, we provide 6077h (Torque actual value) etc.

Note) - The sum of 6071h (Target torque) and 60B2h (Torque offset) is limited by the minimum value of either 6072h (Max torque) or 3013h (1st torque limit).

- The velocity is limited by 6080h (Max motor speed).

6-9 Common Motion Function

6-9-1 Touch Probe Function (position latch request/release)

This function selects a latch trigger signal from external input (EXT1/EXT2) or Z-phase (one rotation data of rotary encoder is 0 position during semi-closed control, and Z-phase position of external incremental scale during full-closed control) and latches the feedback position.

- When it uses a external input (EXT1/EXT2) by the signal of latch trigger, assign EXT1 to SI5 and assign EXT2 to SI6, respectively.
  When Homing operation is carried out without assigning, Err88.3 (Improper operation error protection) occurs.

- If the latch trigger signal is external input(EXT1/EXT2), the import difference occurs.
  Reduce the velocity around the latch trigger signal input as much as possible.

- Set the input ON width and OFF width of the latch trigger signal to 2 ms or more.

- If the Z-phase is selected by the trigger while using absolute scale during full-closed control,
  Err88.3 (Improper operation error protection) occurs.

- If the setting chooses the Z-phase selection at the trigger, please do not select edge falling.
  The operation can not be guaranteed if it set to the above setting.

- The touch probe function is disabled in the cases below: (The value of 60B9h is cleared to 0.)
  1) The ESM state becomes Init
  2) The mode changed into the hm mode

- Please do not set at the same time the rising and falling edges of the same TouchProbe.
  Behavior when set at the same time can not be guaranteed.

- Multi-turn clear, test run, frequency response analyzing, Z-phase search, fit gain, and pin assign setting from PANATERM may not be performed when TouchProbe is running.
  Behavior when one of these is performed cannot be guaranteed.

1) Configuration of touch probe function

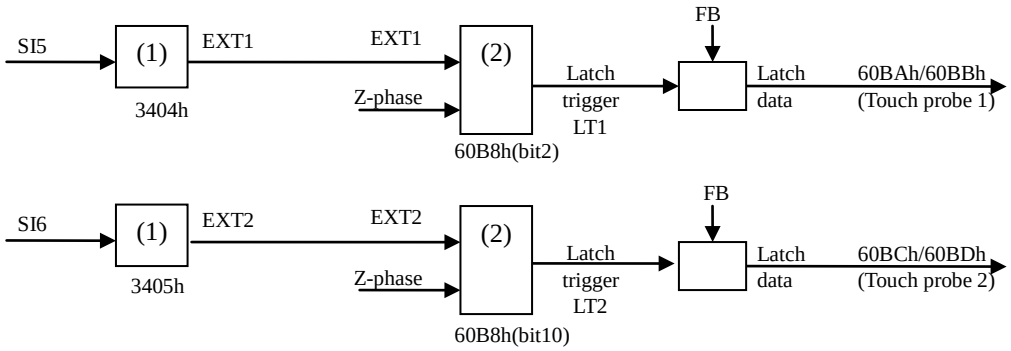

60B8h：Touch probe function
60BAh：Touch probe pos1 pos value
60BBh：Touch probe pos1 neg value
60BCh：Touch probe pos2 pos value
60BDh：Touch probe pos2 neg value

(1) Allocating general-purpose input			
Signal	Parameter	Allocation	Setup value
SI5	3404h	Selects EXT1 a-contact	00202020h
		Selects EXT1 b-contact	00A0A0A0h
SI6	3405h	Selects EXT2 a-contact	00212121h
		Selects EXT2 b-contact	00A1A1A1h

(2) 60B8h (Touch probe function)			
bit10	LT2	bit2	LT1
0	EXT2	0	EXT1
1	Z-phase	1	Z-phase

2) Touch probe relevant object

Index	Sub-Index	Name	Units	Range	Data Type	Access	PDO
60B8h	00h	Touch probe function	-	0 - 65535	U16	rw	RxPDO
60B9h	00h	Touch probe status	-	0 - 65535	U16	ro	TxPDO
60BAh	00h	Touch probe pos1 pos value	Command	-2147483648 - 2147483647	I32	ro	TxPDO
60BBh	00h	Touch probe pos1 neg value	Command	-2147483648 - 2147483647	I32	ro	TxPDO
60BCh	00h	Touch probe pos2 pos value	Command	-2147483648 - 2147483647	I32	ro	TxPDO
60BDh	00h	Touch probe pos2 neg value	Command	-2147483648 - 2147483647	I32	ro	TxPDO

3) Touch probe function (60B8h)

The basic object used for starting touch probe operation and configuring various setting.

Index	Sub-Index	Name / Description	Units	Range	Data Type	Access	PDO	Op-mode	EEPROM
60B8h	00h	Touch probe function • Set the Touch probe function.	-	0 - 65535	U16	rw	RxPDO	ALL	No

Bit description

bit	value	Note	
0	0	Switch off touch probe 1	Touch Probe 1 start/stop
	1	Enable touch probe 1	
1	0	Trigger first event	Touch Probe 1 Select event mode
	1	Continuous	
2	0	Trigger with touch probe 1 input	Touch Probe 1 Select trigger (external input/Z-phase)
	1	Trigger with 0 impulse signal of position encoder	
3	-	Reserved	Not used
4	0	Switch off sampling at positive edge of touch probe 1	Touch Probe 1 Select rising edge
	1	Enable sampling at positive edge of touch probe 1	
5	0	Switch off sampling at negative edge of touch probe 1	Touch Probe 1 Select falling edge
	1	Enable sampling at negative edge of touch probe 1	
6-7	-	Not Supported	Not used

bit	value	Note	
8	0	Switch off touch probe 2	Touch Probe 2 start/stop
	1	Enable touch probe 2	
9	0	Trigger first event	Touch Probe 2 Select event mode (single/continuous)
	1	Continuous	
10	0	Trigger with touch probe 2 input	Touch Probe 2 Select trigger (external input/Z-phase)
	1	Trigger with 0 impulse signal of position encoder	
11	-	Reserved	Not used
12	0	Switch off sampling at positive edge of touch probe 2	Touch Probe 2 Select rising edge
	1	Enable sampling at positive edge of touch probe 2	
13	0	Switch off sampling at negative edge of touch probe 2	Touch Probe 2 Select falling edge
	1	Enable sampling at negative edge of touch probe 2	
14-15	-	Not Supported	Not used

- Please do not set at the same time the rising and falling edges of the same TouchProbe.
  Behavior when set at the same time can not be guaranteed.
- When choose the Z-phase selection at the trigger, please do not select edge falling.
  The action at the time of performing the above-mentioned setup cannot be guaranteed.
- Indicates that the logical state changes from OFF to ON and the rising edge of the signal of interest.
  Also, indicate the timing of changes from ON to OFF logic state of the signal of interest is falling edge.

4) Touch probe status (60B9h)

Displays the state of the touch probe operation.

Index	Sub-Index	Name / Description	Units	Range	Data Type	Access	PDO	Op-mode	EEPROM
60B9h	00h	Touch probe status • Displays the state of the Touch probe function.	-	0 - 65535	U16	ro	TxPDO	ALL	No

Bit description

bit	value	Note	
0	0	Touch probe 1 is switch off	Touch probe 1 operation stop
	1	Touch probe 1 is enabled	Touch probe 1 is in operation
1	0	Touch probe 1 no positive edge value stored	Rising edge Touch probe 1 is incomplete status
	1	Touch probe 1 positive edge value stored	Rising edge Touch probe 1 is completion status
2	0	Touch probe 1 no negative edge value stored	Falling edge Touch probe 1 is incomplete status
	1	Touch probe 1 negative edge value stored	Falling edge Touch probe 1 is completion status
3-5	-	Reserved	Not used
6-7	-	Not Supported	Not used

bit	value	Note	
8	0	Touch probe 2 is switch off	Touch probe 2 operation stop
	1	Touch probe 2 is enabled	Touch probe 2 is in operation
9	0	Touch probe 2 no positive edge value stored	Rising edge Touch probe 2 is incomplete status
	1	Touch probe 2 positive edge value stored	Rising edge Touch probe 2 is completion status
10	0	Touch probe 2 no negative edge value stored	Falling edge Touch probe 2 is incomplete status
	1	Touch probe 2 negative edge value stored	Falling edge Touch probe 2 is completion status
11-13	-	Reserved	Not used
14-15	-	Not Supported	Not used

5) Touch probe position 1/2 positive value (60BAh - 60BDh)

Displays the latch position imported.

Index	Sub-Index	Name / Description	Units	Range	Data Type	Access	PDO	Op-mode	EEPROM
60BAh	00h	Touch probe pos1 pos value	Command	-2147483648 - 2147483647	I32	ro	TxPDO	ALL	No
		• Displays the position latched at the rising edge of Touch probe 1.							
60BBh	00h	Touch probe pos1 neg value	Command	-2147483648 - 2147483647	I32	ro	TxPDO	ALL	No
		• Displays the position latched at the falling edge of Touch probe 1.							
60BCh	00h	Touch probe pos2 pos value	Command	-2147483648 - 2147483647	I32	ro	TxPDO	ALL	No
		• Displays the position latched at the rising edge of Touch probe 2.							
60BDh	00h	Touch probe pos2 neg value	Command	-2147483648 - 2147483647	I32	ro	TxPDO	ALL	No
		• Displays the position latched at the falling edge of Touch probe 2.							

6) Starting touch probe operation

When the bit0/bit8 (Touch probe start/stop) of 60B8h(Touch probe function) is changed from 0 (Stop) to 1 (Start), imports various setting conditions (60B8h: bits 1 - 7/bits 9 - 15) and starts the Touch probe operation.

To enable the change of various setting conditions, put back the bit0/bit8 to 0 (Stop) once and then set the bit0/bit8 to 1 (Start) again.

7) Event mode of touch probe

The bit1/bit9 (Select event mode) of 60B8h (Touch probe function) enable to select 0 (Trigger first event) or 1 (Continuous) mode.

<Trigger first event mode> (60B8h: bit 1 = 0/bit9 = 0)

After the startup, this mode is latched only by the first trigger signal.
To import the signal again, restart the touch probe function.

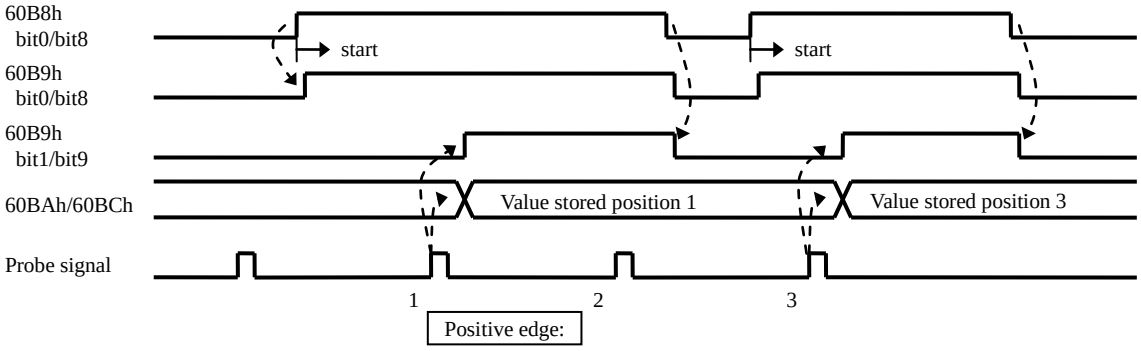

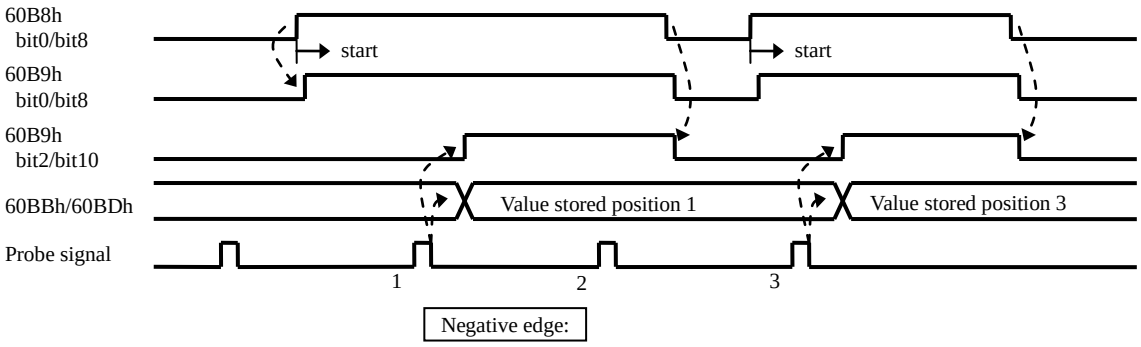

<Continuous mode> (60B8h: bit1 = 1/bit9 = 1)

After the startup, this mode is latched each time the trigger signal is detected.
A stored value is retained until the next probe signal.

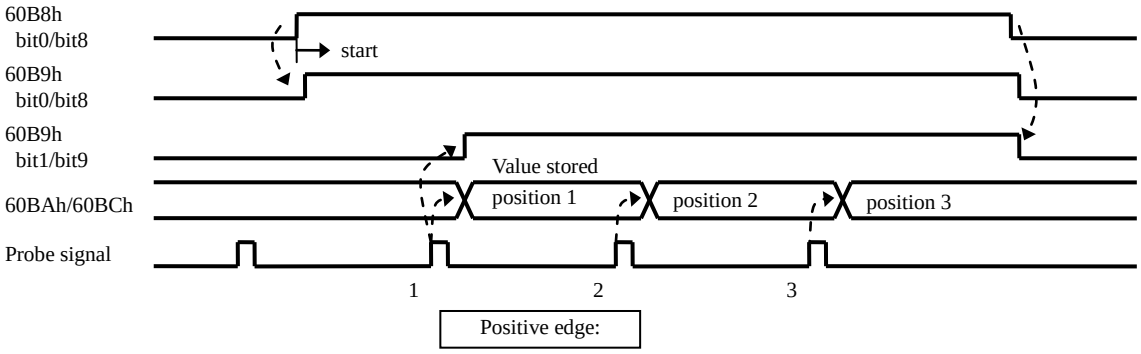

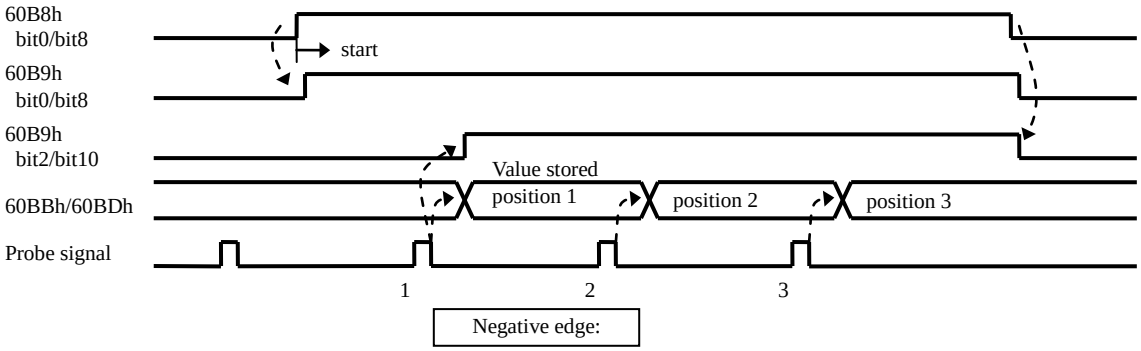

8) The correction function for detection delay of latch position

Set the correction time for delay of the latch trigger signal detection.

Index	Sub-Index	Name / Description	Units	Range	Data Type	Access	PDO	Op-mode	EEPROM
3709h	00h	Correction time of latch delay 1	25ns	-2000 – 2000	I16	ro	TxPDO	ALL	No
		• Set the correction time for delay of the latch trigger signal detection. This parameter can be switched by 3724h(Communication function extended setup 3) bit5. bit5 is 0: The correction time is reflected in both the latch signal rising edge detection and the latch signal falling edge detection. bit5 is 1: The correction time is reflected in the latch signal rising edge detection. *Signal state of edge detection means the following The rising edge detection means the photocoupler is turned ON. The falling edge detection means the photocoupler is turned OFF.							
3724h	00h	Communication function extended setup 3	Command	-32768 – 32767	I16	ro	TxPDO	ALL	No
		• bit 5 : The correction function for detection delay of latch position. 0:The correction time of both the latch signal rising edge detection and the latch signal falling edge detection is set by 3709h(Correction time of latch delay 1) 1:The correction time of the latch signal rising edge detection is set by Pr7.09, the correction time of the latch signal falling edge detection is set by 3792h(Correction time of latch delay 2).							
3792h	00h	Correction time of latch delay 2	25ns	-2000 – 2000	I16	ro	TxPDO	ALL	No
		• Set the correction time for delay of the latch trigger signal detection. This parameter can be switched by 3724h(Communication function extended setup 3) bit5. bit5 is 0: Invalid bit5 is 1: The correction time is reflected in the latch signal falling edge detection. *Signal state of edge detection means the following The rising edge detection means the photocoupler is turned ON. The falling edge detection means the photocoupler is turned OFF.							

(Note) Delay time of the latch trigger signal detection is different by the operating environment and aging.
In the case of requesting accuracy, please set the correction time of latch delay as necessary.

6-9-2 Option Code (deceleration stop sequence)

Sets how to decelerate and stop the motor if main power is shut down or an alarm occurs while PDS is Operation enabled state (servo-on state).

Combine the deceleration function (option code) defined by CoE(CiA402) and the deceleration function on the servo (MINAS-A6) side (dynamic brake stop, free-run stop, emergency stop).

- PDS option code list

Index	Sub-Index	Name	Units	Range	Data Type	Access	PDO
6007h	00h	Abort connection option code	-	0 - 3	I16	rw	No
605Ah	00h	Quick stop option code	-	-2 - 7	I16	rw	No
605Bh	00h	Shutdown option code	-	0 - 1	I16	rw	No
605Ch	00h	Disable operation option code	-	0 - 1	I16	rw	No
605Dh	00h	Halt option code	-	1 - 3	I16	rw	No
605Eh	00h	Fault reaction option code	-	0 - 2	I16	rw	No

- Related option code list

Index	Sub-Index	Name / Description	Units	Range	Data Type	Access	PDO	Op-mode	EEPROM
6084h	00h	Profile deceleration	Command/s^2	0 – 4294967295	U32	rw	RxPDO	pp pv hm ip csp csv	Yes
		• Set the profile deceleration. • If it is set to 0, internal processing is treated as 1.							
6085h	00h	Quick stop deceleration	Command/s^2	0 – 4294967295	U32	rw	RxPDO	pp ip pv hm csp csv	Yes
		- If 605Ah(Quick stop option code) is “2” or “6”, is set to value of deceleration parameter to be used deceleration stopping at the time of Quick stop or disable voltage. - It is used when 605Dh(Halt option code) and 605Eh(Fault reaction option code) is “2”. - If it is set to 0, internal processing is treated as 1.							
6087h	00h	Torque slope	0.1%/s	0 - 4294967295	U32	Rw	RxPDO	tq cst	Yes
		• Set a parameter value for giving slope to a torque command. • In the cyclic synchronous torque mode (cst), torque slope is effective only during the deceleration stop sequence. • When 0 has been set, the setting is regarded as 1 internally.							
609Ah	00h	Homing acceleration	Command/s^2	0 - 4294967295	U32	rw	RxPDO	hm	Yes
		• Set the acceleration and deceleration during the Homing mode (hm). • The deceleration of homing operation are common in this object. • At the final stop of each Homing method (when the homing position is detected), the servo lock is carried out for the stopping, instead of using the preset value of this object. • If it is set to 0, internal processing is treated as 1.							
60C6h	00h	Max deceleration	Command/s^2	0 – 4294967295	U32	rw	RxPDO	pp hm pv ip	Yes
		• Set the maximum deceleration. • If it is set to 0, internal processing is treated as 1.							

Index	Sub-Index	Name / Description	Units	Range	Data Type	Access	PDO	Op-mode	EEPROM
3506h	00h	Sequence at Servo-Off	—	0 - 9	I16	rw	No	ALL	Yes
		- Set the state after stop and during deceleration in the following cases: when 605Ah (Quick stop option code) is "0" and Quick stop is accepted; when 605Bh (Shutdown option code) is "0" and Shutdown or Disable voltage is accepted; when 605Ch (Disable operation option code) is "0" and Disable operation is accepted; when 6007h (Abort connection option code) is "2", 605Bh is “0”, and main power is shut off; or when 6007h (Abort connection option code) is "3", 605Ah is “0”, and main power is shut off. For more information, refer to Section 6-3-2”Sequence at Servo-Off” of the Specification for basic functions(SX-DSV03241).							
3510h	00h	Sequence at alarm	—	0 - 7	I16	rw	No	ALL	Yes
		- Set to state after the stop during deceleration at the time of alarm occurrence except Err80.0-80.7, Err81.0-81.7, Err85.0-85.7 and Err88.0-88.7. For more information, refer to Section 6-3-2”Sequence at Servo-Off” of the Specification for basic functions(SX-DSV03241).							

Servo (MINAS-A6) side deceleration

If other deceleration factors (such as an alarm) occur during deceleration, the deceleration is performed according to the following priority.
Basically, the deceleration function on the servo (MINAS-A6) side has a higher priority.

<<High priority>>
Servo (MINAS-A6) side deceleration (When alarm)
> STO deceleration (*4)
> Servo (MINAS-A6) side deceleration (When servo off, When the main power is off)
> Servo (MINAS-A6) side deceleration (When drive is inhibited)
> Fault deceleration
> Retracting operation (*5)
> Other CoE (CiA402) side deceleration (*1)(*3)
> Limit system deceleration (*2)
> Halt deceleration
> Normal deceleration
<<Low Priority>>

If a deceleration factor with a higher priority occurs, the process is switched to that deceleration process even if a preceding deceleration operation is in process. (*3)

If a deceleration factor of the lower level of priority occurs, the deceleration operation accepted first will be retained.

Example) When an alarm occurs during deceleration by 605Ah (Quick stop option code),
the deceleration process switches to that of 605Eh (Fault reaction option code).

(*1) It refers to deceleration by Quick stop, Shutdown, and Disable operation.
(*2) It refers to deceleration by inputting of over-travel inhibition (POT, NOT) and Software limit.
(*3) If 0(servo side deceleration) is selected with the option code of the another CoE side deceleration, Priority is the same as servo side deceleration(When servo off).
However, even in this case,if another factor of deceleration of the CoE side occurs during Fault deceleration, the servo side deceleration is not enabled and the fault deceleration is continued.
(*4) STO deceleration is the deceleration by STO function and it decelerates with the setting of 3510h.
See Overview of Chapter 8 Safety (STO) Function in Technical Reference, Basic Function Specifications (SX-DSV03241).
(*5) During the retracting operation, the PDS state becomes "Fault reaction active" and the PDS state transition by the user command can not be performed.
Therefore, even if “Servo (MINAS - A 6) side deceleration (When servo OFF)” occurs, the retracting operation is continued regardless of the priority.

1) Abort connection opition code(6007h)

Sets how to decelerate and stop the motor when main power off.

The operation sequence of main power-off state changes by combination of 6007h(Abort connection option code), 3508h(L/V trip selection upon main power off), 3509h(Detection time of main power off) etc.

Index	Sub-Index	Name / Description	Units	Range	Data Type	Access	PDO	Op-mode	EEPROM
6007h	00h	Abort connection option code	-	0 - 3	I16	rw	No	ALL	Yes
		• When physical main power supply interception occurs, The sequence of deceleration stop to be executed between the Up to the power supply interception detection time set up at 3509h(Detection time of main power off) from after power supply interception 70ms is set up. In the case of 3509h=2000, only the sequence of deceleration stop set up by this object is performed. It is prohibition of a setup except the following value. 0: No action 1: Fault signal (Deceleration according to 605Eh(Fault reaction option code)) 2: Disable voltage command (Deceleration according to 605Bh(Shutdown option code)) 3: Quick stop command (Deceleration according to 605Ah(Quick stop option code))							
3507h	00h	Sequence upon main power off	—	0 - 9	I16	rw	No	ALL	Yes
		- Set the deceleration mode on the servo (MINAS-A6) side (sequence when main power is off). Set status during deceleration and status after stop when bit0 of 3508h (L/V trip selection upon main power off) is set to "0" and a value other than "2000" is set for 3509h (Detection time of main power off) with main power off. For more information, refer to Section 6-3-3”Sequence at main power off” of the Specification for basic functions(SX-DSV03241).							
3508h	00h	L/V trip selection upon main power off	—	0 - 3	I16	rw	No	ALL	Yes
		- Select to perform servo off or LV trip at time of main power alarm. bit0 0:perform servo off according to setting of 6007h(Abort connection option code) or 3507h(Sequence upon main power off). 1:Detected Err13.1”Main power supply undervoltage protection ” bit1 0:The main power off warning only detected servo state 1:The main power off warning always detected							
3509h	00h	Detection time of main power off	1ms	70 - 2000	I16	rw	No	ALL	Yes
		- Set the starting time of decelaration by 3507h (Sequence upon main power off). The decelaration by 3507h is disabled when this parameter is set 2000. (Note: Even if 2000 is set, the deceleration process on the CoE (CiA402) side will not be disabled.)							

There is a related object also to others.
For more information, refer to beginning of section 6-9-2.

Index	Sub-Index	Name	Units	Range	Data Type	Access	PDO
6084h	00h	Profile deceleration	Command/s^2	0 – 4294967295	U32	rw	RxPDO
6085h	00h	Quick stop deceleration	command/s^2	0 – 4294967295	U32	rw	RxPDO
6087h	00h	Torque slope	0.1%/s	0 – 4294967295	U32	rw	RxPDO
609Ah	00h	Homing acceleration	Command/s^2	0 - 4294967295	U32	rw	RxPDO
60C6h	00h	Max deceleration	Command/s^2	0 – 4294967295	U32	rw	RxPDO
3506h	00h	Sequence at Servo-Off	—	0 - 9	I16	rw	No
3510h	00h	Sequence at alarm	—	0 - 7	I16	rw	No

The following table shows the operation sequence for each combination of objects.
Basically, the deceleration function defined in CoE(CiA402) is effective until the deceleration function on the servo (MINAS-A6) side is activated by detection of the insulation of the main power AC (between L1 and L3).

- When “No action” is set by 6007h = 0, the CoE(CiA402) deceleration function does not operate, and the deceleration function on the servo (MINAS-A6) side operates.

- When the voltage between P and N decreases, Err13.0 (Main power undervoltage protection (PN)) occurs with the highest priority, causing the operation in accordance with 3510h (Sequence at alarm).

Refer to Section 6-3-3 “Sequence at main power off” in Basic function specifications of the Technical document (SX-DSV03241) as well.

a) In case of 3509h = 2000 (When detection of the insulation of the main power AC is invalid)

State	Setting value of 6007h	Setting value of target option code	Deceleration method
At the time of under voltage between P and N	-	-	Decelerate according to 3510h after Err13.0 occurrence
At the time of insulating main power AC (between L1-L3)	0 (No action)	-	Hold the operation state
	1 (Fault signal)	605Eh=0	Decelerate according to 3510h after Err88.0 occurrence
		Except 605Eh=0	Err88.0 occurrence after deceleration according to 605Eh
	2 (Disable voltage command)	605Bh=0	Decelerate according to 3506h
		Except 605Bh=0	Decelerate according to 605Bh
	3 (Quick stop command)	605Ah=0	Decelerate according to 3506h
		Except 605Ah=0	Decelerate according to 605Ah

b) In case of 3509h ≠ 2000 (When detection of the insulation of the main power AC is valid)

State	Setting value of 6007h	Setting value of target option code	Deceleration method			
			Before elapse of time set in 3509h	→	After elapse of time set in 3509h *1) 3508h (bit0)	
At the time of undervoltage between P and N	-	-	Decelerate according to 3510h after Err13.0 occurrence			
At the time of insulating main power AC (between L1-L3)	0 (No action)	-	Hold the operation state	→	0	Decelerate according to 3507h
					1	Decelerate according to 3510h after Err13.1 occurrence
	1 (Fault signal)	605Eh=0	Decelerate according to 3510h after Err88.0 occurrence			
		Except 605Eh=0	Err88.0 occurrence after deceleration according to 605Eh	→	0	Decelerate according to 3507h Err88.0 occurrence after deceleration
					1	Decelerate according to 3510h after Err13.1 occurrence (Err88.0 occurrence after deceleration)
	2 (Disable voltage command)	605Bh=0	Decelerate according to 3506h	→	0	Decelerate according to 3507h
					1	Decelerate according to 3507h
		Except 605Bh=0	Decelerate according to 605Bh	→	0	Decelerate according to 3507h
					1	Decelerate according to 3510h after Err13.1 occurrence
	3 (Quick stop command)	605Ah=0	Decelerate according to 3506h	→	0	Decelerate according to 3507h
					1	Decelerate according to 3507h
		Except 605Ah=0	Decelerate according to 605Ah	→	0	Decelerate according to 3507h
					1	Decelerate according to 3510h after Err13.1 occurrence

*1) Deceleration is not executed if the actual speed has reached 30 r/min or below before the time set for 3509h elapses.

Example of the deceleration and stop due to main power shut-down

A: The decelaration by 6007h is started 70ms after main power OFF.

B: If the time set up at 3509h after the main power supply OFF passes, it will change to decelaration by 3507h.

C: After detecting actual velocity 30 r/min or less, the motor stops.

D: If the main power is turned ON, 6041h:bit4 (Status word: voltage enabled) changes to 1.

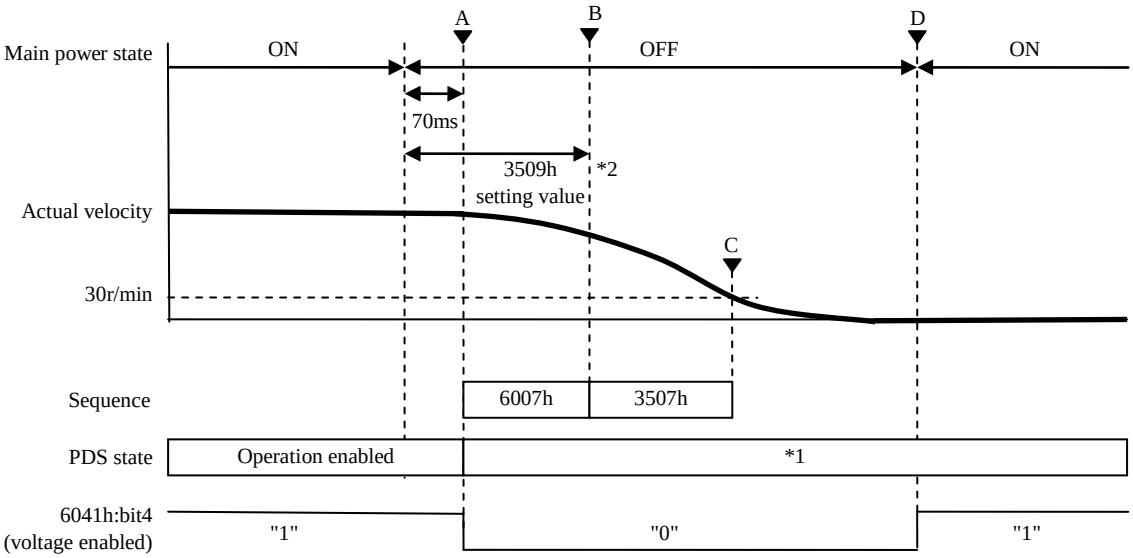

*1 The PDS state under slowdown and after a stop changes with this object and preset values 3508h(bit0) and 3509h. Refer to the following page table.

*2 If actual velocity becomes 30 or less r/min when 3509h = 2000(detection of main power AC insulation invalid) and before the time set up at 3509h passed, deceleration and stop processing by 3507h is not carried out.

*3 If main power off is detected in the sequence at servo-off, after decelerated stop according to the sequence at servo-off, the state transitions to the operation after stop according to the sequence at main power off.

PDS state during deceleration and stop

- Before the time progress set up at 3509 h, or 3509h = 2000 (detection of main power AC insulation invalid)

6007h's Value *1)	PDS state during deceleration	PDS state after stop (about 30 r/min or less)
0	Hold the current state	When PDS state is Operation enabled at the time of main power-off: Operation enabled
		When PDS state is Quick stop active at the time of main power-off: Switch on disabled
1	Fault reaction active	Fault
2	Hold the current state	Switch on disabled
3	Quick stop Active	Switch on disabled

*1) It is not dependent on the preset value of 3508h(bit0).

- After the time progress set up at 3509h

6007h's Value	Target Option code value	3508h's (bit 0) Value	PDS state during deceleration	PDS state after stop (approx. 30 r/min or less)
0	-	0	Current state is maintained.	When PDS state is Operation enabled at the time of main power-off: Ready to switch on
				When PDS state is Quick stop active at the time of main power-off: Switch on disabled
		1	Fault reaction active	Fault
1	-	-	Fault reaction active	Fault
2	605Bh=0	-	Current state is maintained.	Switch on disabled
	Other than 605Bh=0	0	Current state is maintained.	Switch on disabled
		1	Fault reaction active	Fault
3	605Ah=0	-	Quick stop active	Switch on disabled
	Other than 605Ah=0	0	Quick stop active	Switch on disabled
		1	Fault reaction active	Fault

2) Quick stop option code(605Ah)

Sets how to decelerate and stop the motor when the PDS command "Quick Stop" is accepted.

Index	Sub-Index	Name / Description	Units	Range	Data Type	Access	PDO	Op-mode	EEPROM
605Ah	00h	Quick stop option code	-	-2 - 7	I16	rw	No	ALL	Yes

- Set the sequence during "Quick Stop" or "Disable voltage". The definition can differ according to the operation mode.
  Other than the values below are disabled.

■ pp, csp, ip, csv, pv

-1,-2 : For manufacturer's use
0: After the motor stops due to 3506h (Sequence during servo-off), moves to Switch on disabled.
1: After the motor stops due to 6084h (Profile deceleration), moves to Switch on disabled.
2: After the motor stops due to 6085h (Quick stop deceleration), moves to Switch on disabled.
3: After the motor stops due to 60C6h(Max deceleration), moves to Switch on disabled.
5: After the motor stops due to 6084h (Profile deceleration), moves to Quick stop active. (*1)
6: After the motor stops due to 6085h (Quick stop deceleration), moves to Quick stop active. (*1)
7: After the motor stops due to 60C6h(Max deceleration), moves to Quick stop active. (*1)

■ hm

-1,-2 : For manufacturer's use
0: After the motor stops due to 3506h (Sequence during servo-off), moves to Switch on disabled.
1: After the motor stops due to 609Ah (Homing acceleration), moves to Switch on disabled.
2: After the motor stops due to 6085h(Quick stop deceleration), moves to Switch on disabled.
3: After the motor stops due to 60C6h(Max deceleration), moves to Switch on disabled.
5: After the motor stops due to 609Ah (Homing acceleration), moves to Quick stop active. (*1)
6: After the motor stops due to 6085h(Quick stop deceleration), moves to Quick stop active. (*1)
7: After the motor stops due to 60C6h(Max deceleration), moves to Quick stop active. (*1)

■ cst, tq

-1,-2 : For manufacturer's use
0: After the motor stops due to 3506h (Sequence during servo-off), moves to Switch on disabled.
1, 2: After the motor stops due to 6087h (Torque slope), moves to Switch on disabled.
3: After the motor stops due to 0 torque, moves to Switch on disabled.
5, 6: After the motor stops due to 6087h (Torque slope), moves to Quick stop active. (*1)
7: After the motor stops due to 0 torque, moves to Quick stop active. (*1)

(*1) Status is changed to Switch on disabled if main power is shut off at 6007h=3.

There is a related object also to others.
For more information, refer to beginning of section 6-9-2.

Index	Sub-Index	Name	Units	Range	Data Type	Access	PDO
6084h	00h	Profile deceleration	Command/s^2	0 – 4294967295	U32	rw	RxPDO
6085h	00h	Quick stop deceleration	command/s^2	0 – 4294967295	U32	rw	RxPDO
6087h	00h	Torque slope	0.1%/s	0 – 4294967295	U32	rw	RxPDO
609Ah	00h	Homing acceleration	Command/s^2	0 - 4294967295	U32	rw	RxPDO
60C6h	00h	Max deceleration	Command/s^2	0 – 4294967295	U32	rw	RxPDO
3506h	00h	Sequence at Servo-Off	—	0 - 9	I16	rw	No

Example of deceleration and stop due to Quick Stop

A: When 6040h: bit 2 (Control word: quick stop) changes from 1 to 0, the deceleration start.
The PDS state during the deceleration is Quick stop active.

B: After detecting actual velocity 30 r/min or less, the motor stops.
The PDS state after the stop is Switch on disable or Quick stop active.

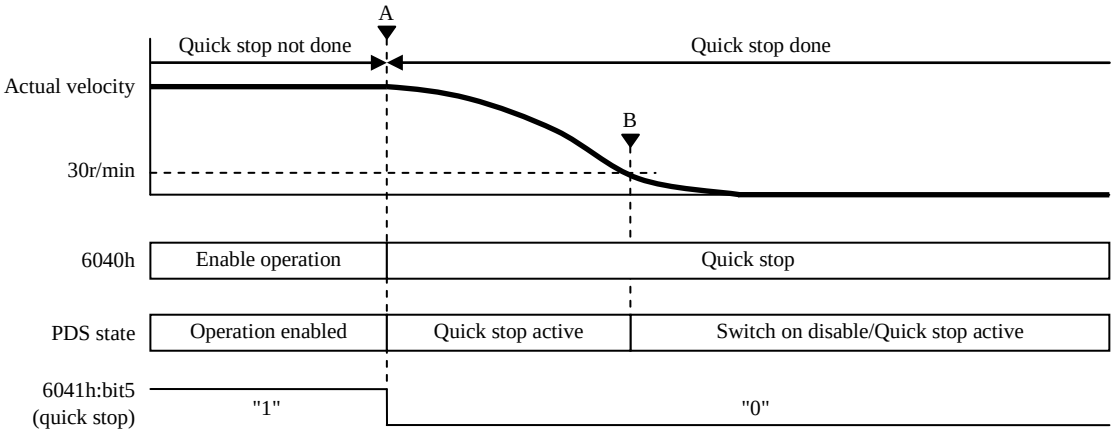

3) Shutdown option code(605Bh)

Sets how to decelerate and stop the motor when the PDS command "Shutdown" or "Disable voltage" is accepted.

Index	Sub-Index	Name / Description	Units	Range	Data Type	Access	PDO	Op-mode	EEPROM
605Bh	00h	Shutdown option code	-	0 - 1	I16	rw	No	ALL	Yes

- Set the sequence when the PDS command "Shutdown" is accepted. The definition can differ according to the operation mode.
  Other than the values below are disabled.

(1) The PDS command "Shutdown" is accepted

■ pp, csp, ip, csv, pv
0: After the motor stops due to 3506h (Sequence during servo-off), changes to Ready to switch on.
1: After the motor stops due to 6084h (Profile deceleration), changes to Ready to switch on.

■ hm
0: After the motor stops due to 3506h (Sequence during servo-off), changes to Ready to switch on.
1: After the motor stops due to 609Ah (Homing acceleration), changes to Ready to switch on.

■ cst, tq
0: After the motor stops due to 3506h (Sequence during servo-off), changes to Ready to switch on.
1: After the motor stops due to 6087h (Torque slope), changes to Ready to switch on.

(2) The PDS command "Disable voltage" is accepted.

■ pp, csp, ip, csv, pv
0: After the motor stops due to 3506h(Sequence at Servo-off), changes Switch on disabled.
1: After the motor stops due to 6084h(Profile deceleration), changes Switch on disabled.

■ hm
0: After the motor stops due to 3506h(Sequence at Servo-off), changes Switch on disabled.
1: After the motor stops due to 609Ah(Homing acceleration), changes Switch on disabled.

■ cst, tq
0: After the motor stops due to 3506h(Sequence at Servo-off), changes Switch on disabled.
1: After the motor stops due to 6087h(Torque slope), changes Switch on disabled.

There is a related object also to others.
For more information, refer to beginning of section 6-9-2.

Index	Sub-Index	Name	Units	Range	Data Type	Access	PDO
6084h	00h	Profile deceleration	Command/s^2	0 – 4294967295	U32	rw	RxPDO
6087h	00h	Torque slope	0.1%/s	0 – 4294967295	U32	rw	RxPDO
609Ah	00h	Homing acceleration	Command/s^2	0 - 4294967295	U32	rw	RxPDO
3506h	00h	Sequence at Servo-Off	—	0 - 9	I16	rw	No

Example of deceleration and stop due to Shutdown command

A: When the PDS command "Shutdown" is accepted, the deceleration start.
The PDS state keeps Operation enabled during the deceleration.

B: After detecting actual velocity 30 r/min or less, the motor stops.
The PDS state will be Ready to switch on after the stop.

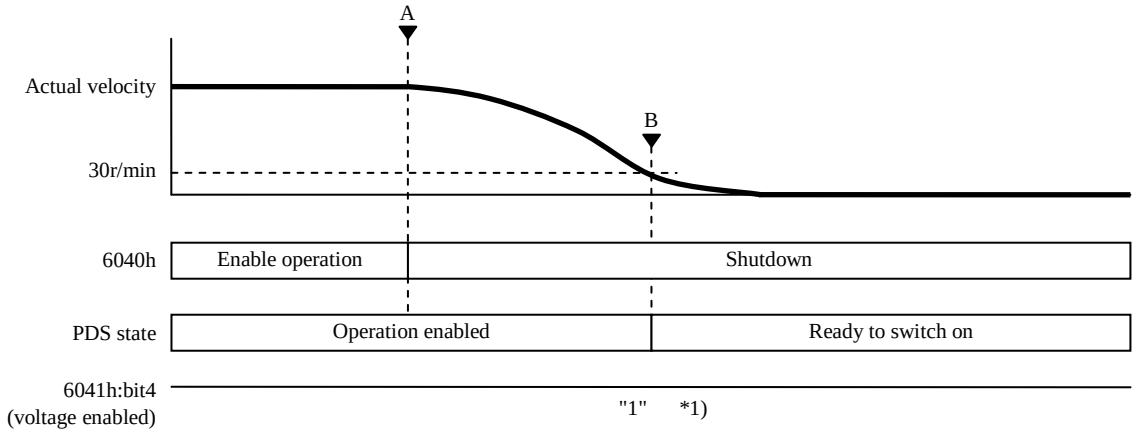

*1): 6041h: bit 4 (Status word: voltage enabled) remains 1.

4) Disable operation option code (605Ch)

Sets how to decelerate and stop the motor when the PDS command "Disable operation" is accepted.

Index	Sub-Index	Name / Description	Units	Range	Data Type	Access	PDO	Op-mode	EEPROM
605Ch	00h	Disable operation option code	-	0 - 1	I16	rw	No	ALL	Yes

- Set the sequence during Disable Operation. The definition can differ according to the operation mode. Other than the values below are disabled.

■ pp, csp, ip, csv, pv
0: After the motor stops due to 3506h (Sequence during servo-off), moves to Switched on.
1: After the motor stops due to 6084h (Profile deceleration), moves to Switched on.

■ hm
0: After the motor stops due to 3506h (Sequence during servo-off), moves to Switched on.
1: After the motor stops due to 609Ah (Homing acceleration), moves to Switched on.

■ cst, tq
0: After the motor stops due to 3506h (Sequence during servo-off), moves to Switched on.
1: After the motor stops due to 6087h (Torque slope), moves to Switched on.

There is a related object also to others.
For more information, refer to beginning of section 6-9-2.

Index	Sub-Index	Name	Units	Range	Data Type	Access	PDO
6084h	00h	Profile deceleration	Command/s^2	0 – 4294967295	U32	rw	RxPDO
6087h	00h	Torque slope	0.1%/s	0 – 4294967295	U32	rw	RxPDO
609Ah	00h	Homing acceleration	Command/s^2	0 - 4294967295	U32	rw	RxPDO
3506h	00h	Sequence at Servo-Off	—	0 - 9	I16	rw	No

Example of deceleration and stop due to servo-off
A: If the servo amolifier accepts to PDS command “Disable operation”, the deceleration start.
The PDS state keeps Operation enabled during the deceleration.
B: After detecting actual velocity 30 r/min or less, the motor stops.
The PDS state will be Switched on after the stop.

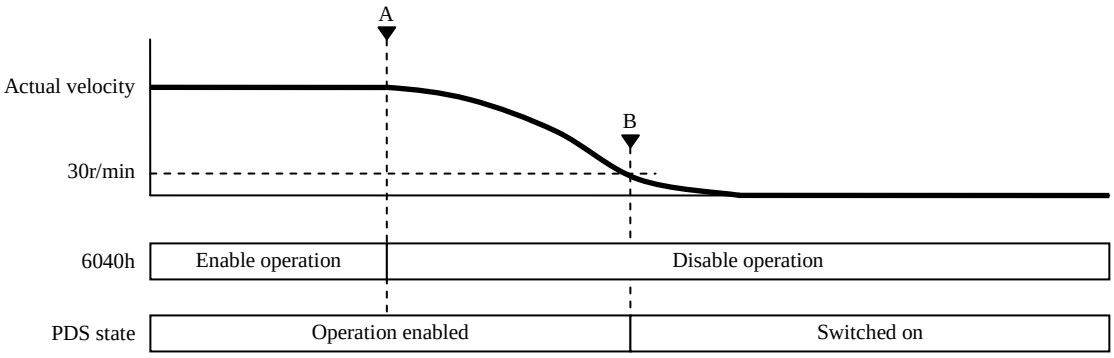

5) Halt option code (605Dh)

Sets how to decelerate and stop the motor when the halt bit of 6040h (Control word) is set to 1.

Index	Sub-Index	Name / Description	Units	Range	Data Type	Access	PDO	Op-mode	EEPROM
605Dh	00h	Halt option code	-	1 - 3	I16	rw	No	ALL	Yes

- Set how to stop the motor during the Halt operation. The definition can differ according to the operation mode.
  Other than the values below are disabled.

■ pp, csp, ip, csv, pv
  1: After the motor stops due to 6084h (Profile deceleration), keeps Operation enabled.
  2: After the motor stops due to 6085h (Quick stop deceleration), keeps Operation enabled.
  3: After the motor stops due to 6072h (Max torque),60C6h (Max deceleration), keeps Operation enabled.

■ hm
  1: After the motor stops due to 609Ah (Homing acceleration), keeps Operation enabled.
  2: After the motor stops due to 6085h (Quick stop deceleration), keeps Operation enabled.
  3: After the motor stops due to 6072h (Max torque),60C6h (Max deceleration), keeps Operation enabled.

■ cst, tq
  1, 2: After the motor stops due to 6087h (Torque slope), keeps Operation enabled.
  3: After the motor stops due to the 0 torque, keeps Operation enabled.

There is a related object also to others.
For more information, refer to beginning of section 6-9-2.

Index	Sub-Index	Name	Units	Range	Data Type	Access	PDO
6084h	00h	Profile deceleration	Command/s^2	0 – 4294967295	U32	rw	RxPDO
6087h	00h	Torque slope	0.1%/s	0 – 4294967295	U32	rw	RxPDO
609Ah	00h	Homing acceleration	Command/s^2	0 - 4294967295	U32	rw	RxPDO

Example of deceleration and stop due to the Halt function
A: When 6040h: bit 8 (Control word: halt) changes from 0 to 1, the deceleration start.
The PDS state keeps Operation enabled during the deceleration.
B: After detecting actual velocity 30 r/min or less, the motor stops.
The PDS state keeps Operation enabled after the stop.

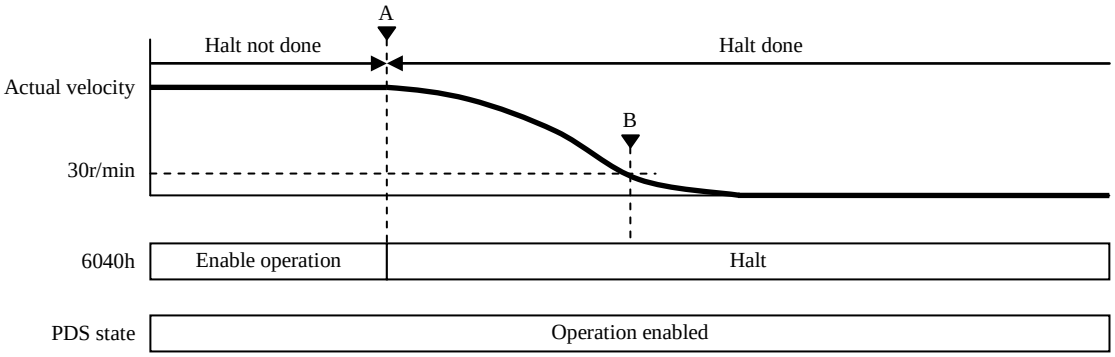

6) Fault reaction option code (605Eh)

Sets how to decelerate the motor when an alarm occurs.

Index	Sub-Index	Name / Description	Units	Range	Data Type	Access	PDO	Op-mode	EEPROM
605Eh	00h	Fault reaction option code	-	0 - 2	I16	rw	No	ALL	Yes

- Set the sequence during the Fault reaction. The definition can differ according to the operation mode. Other than the values below are disabled.

(1) On occurrence of Err80.0-80.7, 81.0-81.7, 85.0-85.7, and 88.0-88.7

■ pp, csp, ip, csv, pv
- 0: After the motor stops due to 3510h (Sequence at alarm), moves to Fault.
- 1: After the motor stops due to 6084h (Profile deceleration), moves to Fault.
- 2: After the motor stops due to 6085h (Quick stop deceleration), moves to Fault.

■ hm
- 0: After the motor stops due to 3510h (Sequence at alarm), moves to Fault.
- 1: After the motor stops due to 609Ah (Homing acceleration), moves to Fault.
- 2: After the motor stops due to 6085h (Quick stop deceleration), moves to Fault.

■ cst, tq
- 0: After the motor stops due to 3510h (Sequence at alarm), moves to Fault.
- 1, 2: After the motor stops due to 6087h (Torque slope), moves to Fault.

(2) On occurrence of other than alarms specified by the term above (1)
- 0, 1, 2: After the motor stops due to 3510h (Sequence at alarm), moves to Fault.

There is a related object also to others.
For more information, refer to beginning of section 6-9-2.

Index	Sub-Index	Name	Units	Range	Data Type	Access	PDO
6084h	00h	Profile deceleration	Command/s^2	0 – 4294967295	U32	rw	RxPDO
6085h	00h	Quick stop deceleration	Command/s^2	0 – 4294967295	U32	rw	RxPDO
6087h	00h	Torque slope	0.1%/s	0 – 4294967295	U32	rw	RxPDO
609Ah	00h	Homing acceleration	Command/s^2	0 - 4294967295	U32	rw	RxPDO
3510h	00h	Sequence at alarm	—	0 - 7	I16	rw	No

Example of deceleration and stop due to alarm occurrence
A: When an alarm occurs, the deceleration start.
The PDS state during the deceleration is Fault reaction active.
B: After detecting actual velocity 30 r/min or less, the motor stops.
The PDS state will be Fault after the stop.

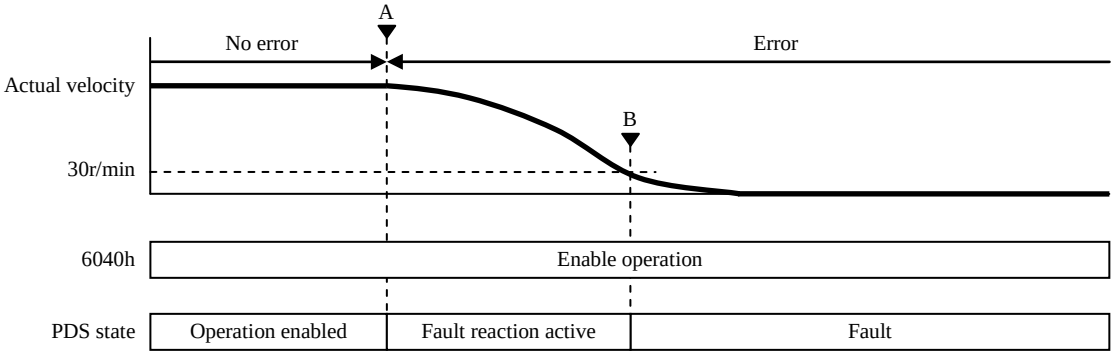

7) Sequence at drive inhibition input (POT, NOT)

Sets the operation sequence after the input of drive inhibition input (POT, NOT).
For more information, see Section 6-3-1 in Basic function specifications of the Technical document (SX-DSV03241).

- Related object

Index	Sub-Index	Name / Description	Units	Range	Data Type	Access	PDO	Op-mode	EEPROM
3504h	00h	Over-travel inhibit input setup	—	0 - 2	I16	rw	No	ALL	Yes
		- Sets the operation after input of drive inhibition input (POT, NOT). 0: Functions as POT; inhibition of positive direction drive and NOT; inhibition of negative direction drive. When POT is input during positive direction operation, or NOT is input during negative direction operation, the operation stops in accordance with 3505h (Sequence at over-travel inhibit). 1: Functions as POT, inhibition of positive direction drive and NOT, inhibition of negative direction drive. When POT is input during positive direction operation, or NOT is input during negative direction operation, the operation stops according to the following. ■ pp, csp, ip, csv, pv Motor is stopped by 6085h (Quick stop deceleration). ■ cst, tq Motor is stopped by 6087h (Torque slope). 2: Err38.0 (Over-travel inhibit input protection 1) occurs when either POT or NOT is input. For more information, refer to Section 6-3-1 “Sequence upon inputting of over-travel inhibition (POT, NOT)” in Basic function specifications of the Technical document (SX-DSV03241).							
3505h	00h	Sequence at over-travel inhibit	—	0 – 2	I16	rw	No	ALL	Yes
		- Sets the state after stop during deceleration after input of drive inhibition input (POT, NOT) when 3504h (Over-travel inhibit input setup) is "0". For more information, refer to Section 6-3-1 “Sequence upon inputting of over-travel inhibition (POT, NOT)” in Basic function specifications of the Technical document (SX-DSV03241).							

There is a related object also to others.
For more information, refer to beginning of section 6-9-2.

Index	Sub-Index	Name	Units	Range	Data Type	Access	PDO
6085h	00h	Quick stop deceleration	command/s^2	0 – 4294967295	U32	rw	RxPDO
6087h	00h	Torque slope	0.1%/s	0 – 4294967295	U32	rw	RxPDO

(Note) If NOT is set for positive operation direction or POT is set for negative operation direction, operations cannot be guaranteed when a sensor has been installed incorrectly.

6-9-3 Digital Inputs/Digital Outputs

The bits of Digital inputs/Digital outputs represent the input state of positive limit switch(POT), negative limit switch(NOT), and home switch(HOME), each logical input state of EXT1 - EXT2, E-STOP and SI-MON1 - SI-MON5 and logical output state of EX-OUT1 and set_brake of all the function signals allocated by the servo parameters 3400h to 3407h, 3410h, and 3411h to3413h.

Here, for information on the signal allocation and logical setting, refer to the technical document "Basic function specifications"(SX-DSV03241).

1) Digital inputs (60FDh)

Index	Sub-Index	Name / Description	Units	Range	Data Type	Access	PDO	Op-mode	EEPROM
60FDh	00h	Digital inputs	-	0 - 4294967295	U32	ro	TxPDO	ALL	No

• Indicate the logical input state of external input signal.

Bit	31	30	29	28	27	26	25	24
Function	(Not Supported)						RET status [RET-STAT]	[INP]
Bit	23	22	21	20	19	18	17	16
Function	[SI-MON5] /[E-STOP]	[SI-MON4]	[SI-MON3]	[SI-MON2] /[EXT2]	[SI-MON1] /[EXT1]	[RET]	(reserved)	
Bit	15	14	13	12	11	10	9	8
Function	(reserved)							
Bit	7	6	5	4	3	2	1	0
Function	(reserved)				(Not Supported)	home switch [HOME]	positive limit switch [POT]	negative limit switch [NOT]

* In the brackets, the code names of the I/O connector input signal and output signal are shown.

The details of each bit are as follows:

Value	Definition
0	Switched off (logical input state is OFF)
1	Switched on (logical input state is ON)

The Bit 2 (Home switch), Bit 1 (Positive limit switch), and Bit 0 (Negative limit switch) of 60FDh (Digital Inputs) represent the home input signal (HOME), positive overtravel input signal (POT), and negative overtravel input signal (NOT) of parallel I/O connector.

For bit24 of positioning complete signal(INP), refer to Section 4-2-4 of the Specification for basic functions(SX-DSV03241).

With respect to bit 25 [RET-STAT] and bit 18 [RET], the first edition of the software version (Ver1.01) does not support them.

2) Digital outputs (60FEh)

(SAFETY PRECAUTIONS)
When performing set brake signal control using this object, be sure to use the PDO and enable the PDO watchdog.
SDO cannot judge communication cut-off, therefore brakes may not work and becomes non-safe.
When use set brake signal, please set the output signal assignment(Setting of 3410h, 3411h, and 3412h).
Also, when use the brake release signal(BRK-OFF) without using the set brake, please set the output signal assignment(Setting of 3410h, 3411h, and 3412h).
For details, refer to Technical document “Basic function specifications” (SX-DSV03241), 2-4-2 “Assignment of output signal” and 9-2 ”Timing Chart“.

Index	Sub-Index	Name / Description	Units	Range	Data Type	Access	PDO	Op-mode	EEPROM
60FEh	-	Digital outputs	-	-	-	-	-	-	-
		• Used to manipulate the output transistor of the external output signal.							
	00h	Number of entries	-	2	U8	ro	No	ALL	No
		• Displays the number of sub-indexes of 60FEh.							
	01h	Physical outputs	-	0 - 4294967295	U32	rw	RxPDO	ALL	Yes
		• manipulate the output of the external output signal.							
	02h	Bit mask	-	0 - 4294967295	U32	rw	RxPDO	ALL	Yes
		• Set the output operation of external output signal mask function for digital output.							

bit	31	30	29	28	27	26	25	24
function	(Not Supported)							
bit	23	22	21	20	19	18	17	16
function	(Not Supported)							EX-OUT1
bit	15	14	13	12	11	10	9	8
function	(reserved)							
bit	7	6	5	4	3	2	1	0
function	(reserved)							set brake

Following are details of each bit.

Subindex 01h : Physical outputs

Bit	Name	value	Note
0	set brake	0	don't set brake(brake does not operate)
		1	set brake(brake operates)
16	EX-OUT1	0	Switched off (output transistor OFF)
		1	Switched off (output transistor ON)

Subindex 02h : Bit mask

Bit	Name	value	Note
0	set brake Bit mask	0	Disable output (Set brakeoutput disabled)
		1	Enable output (Set brakeoutput enabled)
16	EX-OUT1 Bit mask	0	Disable output (EX-OUT 1 output disabled)
		1	Enable output (EX-OUT 1 output enabled)

*Note: When the Bit mask is disabled, each physical output other than set break are processed as the default value (= 0) in the driver.

The output transistor state changes as follows in each communication state:

Sign	Setting value of 3724h	Setting value of 60FEh		State of output transistor			
		01h (Physical outputs)	02h (Bit mask)	Reset	Communication established *1)	Communication intercepterd *1)	Communication re-established *1)
set brake	-	0	0	set brake = 1 (brake on)	set brake = 1 (brake on)	set brake = 1 (brake on)	set brake = 1 (brake on)
		1					
		0	1	set brake = 1 (brake on)	set brake = 0	set brake = 1 (brake on)	set brake = 0
		1			set brake = 1 (brake on)		set brake = 1 (brake on)
EX-OUT 1	bit0 = 0 (hold)	0	0	EX-OUT1 = 0	EX-OUT1 = 0	EX-OUT1 = 0	EX-OUT1 = 0
		1					
		0	1	EX-OUT1 = 0	EX-OUT1 = 0	EX-OUT1 = 0 (hold)	EX-OUT1 = 0
		1			EX-OUT1 = 1	EX-OUT1 = 1 (hold)	EX-OUT1 = 1
	bit0 = 1 (initialization)	0	0	EX-OUT1 = 0	EX-OUT1 = 0	EX-OUT1 = 0	EX-OUT1 = 0
		1					
		0	1	EX-OUT1 = 0	EX-OUT1 = 0	EX-OUT1 = 0	EX-OUT1 = 0
		1			EX-OUT1 = 1		EX-OUT1 = 1

*1) “Communication established”, “Communication intercepted”, and “Communication re-established” refer to the following cases.

Communication established	ESM state is PreOP or higher
Communication intercepted (Note)	PDO communication is disabled (ESM state transitioned to other states than OP), or SDO communication is disabled (ESM state transitioned to Init)
Communication re-established	After 60FEh-01h or 60FEh-02h is successfully written

(Note) When using 60FEh (Digital output), map it to RxPDO.

• Related objects

Index	Sub-Index	Name / Description	Units	Range	Data Type	Access	PDO	Op-mode	EEPROM
3724h	00h	Communication function extended setup 3	—	-32768 - 32767	I16	rw	No	ALL	Yes
		• bit0: The state setting of EX-OUT1 output at the time of communication interception after communication established of the EtherCAT (ESM state is more than PreOP) 0 : hold 1 : Initialization(output at EX-OUT1=0) • bit1: For manufacturer's use Fix it to 0.							

6-9-4 Position information

1) Initialization timing of position information

This servo driver initializes(preset) position information object at the following timing.

・Initialization timing (conditions)
- At the time of the control power supply ON
- When establishing communication (when changing ESM state from Init to PreOP)
- When returning to origin is completed
- When clearing absolute multi-turn from PANATERM or EtherCAT communication
- When PANATERM operation(test run function, frequency response analyzing function, Z phase search,fit gain) is completed.
- When setting pin assign by PANATERM.
- When Err27.4 (Command error protection) occurs (not supported by the first edition Ver1.01)

・Object to be initialized
- 4F04h(Position command internal value(after filtering))
- 4F0Dh(External scale position) (Full-closed control only)
- 4F48h(External scale pulse total) (Full-closed control only)
- 4F86h(Hybrid deviation) (Full-closed control only)
- 4FA7h(External scale position(Applied polarity)) (Full-closed control only)
- 4F41h-02h(Multi-turn data) (Only when clearing absolute multi-turn)
- 6062h (Position demand value)
- 6063h (Position actual internal value)
- 6064h (Position actual value)
- 60FCh (Position demand internal value)

These objects are based on 6063h (Position actual internal value) which shows the feedback position of a motor, the code translation by the electronic gear function, Polarity, and Home offset which are mentioned later are considered, and it is initialized (preset).

Also,Changing the set value of electronic gear ratio,Polarity,and Home offset is reflected at the timing later described in this section.

Please confirm "4) Initialization of the absolute encoder" mentioned later about notes at the time of using an absolute encoder.

2) Electronic Gear Function

The electronic gear is a function which makes the value which multiplies by the electronic gear ratio defined by the object to the position command from host controller as the position command to a position control section. By using this function, the number of revolutions and travel of the motor per command can be set to the desired value.

In MINAS-A6B series, a setup of an electronic gear ratio with a parameter Pr0.08(Number of command pulses per motor revolution), Pr0.09(Numerator of electronic gear) and Pr0.10(Denominator of electronic gear) has not corresponded, an electronic gear ratio is set up by the object 608Fh(Position encoder resolution), 6091h(Gear ratio) and 6092h(Feed constant) specified to CoE(CiA402).

The equation below calculates the relationship between the unit (command) defined by the user and internal unit (pulse):

$$\text{Electronic gear ratio} = \frac{\text{Position encoder resolution} \times \text{Gear ratio}}{\text{Feed constant}}$$

$$\text{Position demand value} \times \text{Electronic gear ratio} = \text{Position demand internal value}$$

(Note) - Electronic gear ratio is valid only within the range of 8000 times to 1/1000 times.
When the range is exceeded, the value is saturated in the range, and Err88.3 (Improper operation error protection) occurs.

- When the denominator or numerator exceeds the unsigned 64-bit size in the calculation process of electronic gear ratio, Err88.3 (Improper operation error protection) occurs.

- When the denominator or numerator exceeds the unsigned 32-bit size in the final calculation result of electronic gear ratio, Err88.3 (Improper operation error protection) occurs.

- Set the electronic gear ratio with several objects.
An error may become large depending on the combination of settings.

- 608Fh-01h (Encoder increments) is automatically set according to encoder resolution.
Under full-closed control, it is also automatically set according to encoder resolution.
The default value of 6092h-01h (Feed) is set so that the electronic gear ratio is 1:1 when a 23-bit/r encoder is used.
<u>When using other encoders than a 23-bit/r encoder, pay attention to the electronic gear ratio settings.</u>

- Electronic gear ratio setting is reflected at the following timing.
  - At the time of the control power supply ON
  - When establishing communication (when changing ESM state from Init to PreOP)
  - When returning to origin is completed
  - When clearing absolute multi-turn from PANATERM or EtherCAT communication
  - When PANATERM operation(test run function, frequency response analyzing function, Z phase search,fit gain) is completed.
  - When setting pin assign by PANATERM.
  - When Err27.4 (Command error protection) occurs (not supported by the first edition Ver1.01)

  Note that the setting is not reflected as is even if the setting values for the related objects have been changed.

- In the position information initialization when Init changes to PreOP in the absolute mode, make a setting so that the value of "Absolute encoder position [pulse/unit]/Electronic gear ratio" is in the range from -2^{31} (-2147483648) to $+2^{31}-1$ (2147483647).
Operations out of this range are not guaranteed.
Check the operation range of the absolute encoder position and the electronic gear ratio.

- The unit of the movement amount setting of the test run function by the setup support tool PANATERM is [command unit]. Note that operations are different from those of the MINAS-A5B series.

- Communication cycle 125μs is supported only if the electronic gear ratio is 1:1.
Operations when the electronic gear ratio is other than 1:1 is not guaranteed.

<Electronic gear setting example>

In the MINAS-A6B series, it is impossible to set the electronic gear using the “number of command pulses per motor revolution (Pr0.08)” and “electronic gear numerator (Pr0.09)/denominator (Pr0.10)” in contrast to the MINAS-A6N series.

When setting the electronic gear like the MINAS-A6N, refer to the following.

- When setting the electronic gear ratio by setting the number of command pulses per motor revolution under semi-closed control

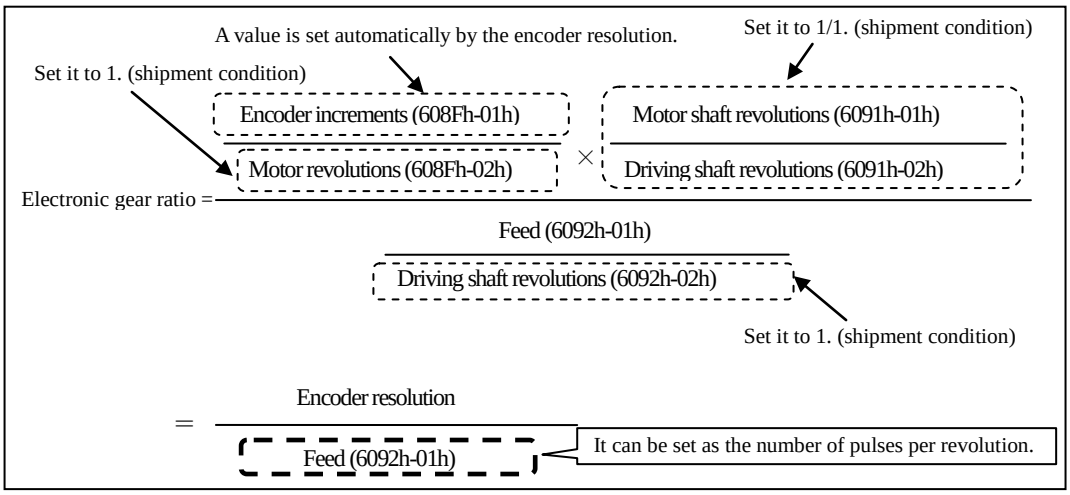

608Fh-01h (Encoder increments) is set automatically from the connected encoder resolution.
By setting 608Fh-02h (Motor revolutions), 6091h-01h (Motor shaft revolutions), 6091h-02h (Driving shaft revolutions) and 6092h-02h (Driving shaft revolutions) to 1 (shipment condition), it is possible to set 6092h-01h (Feed) as the “number of command pulses per motor revolution”.

- When setting the electronic gear ratio by setting the numerator/denominator of electronic gear under semi-closed control or full-closed control

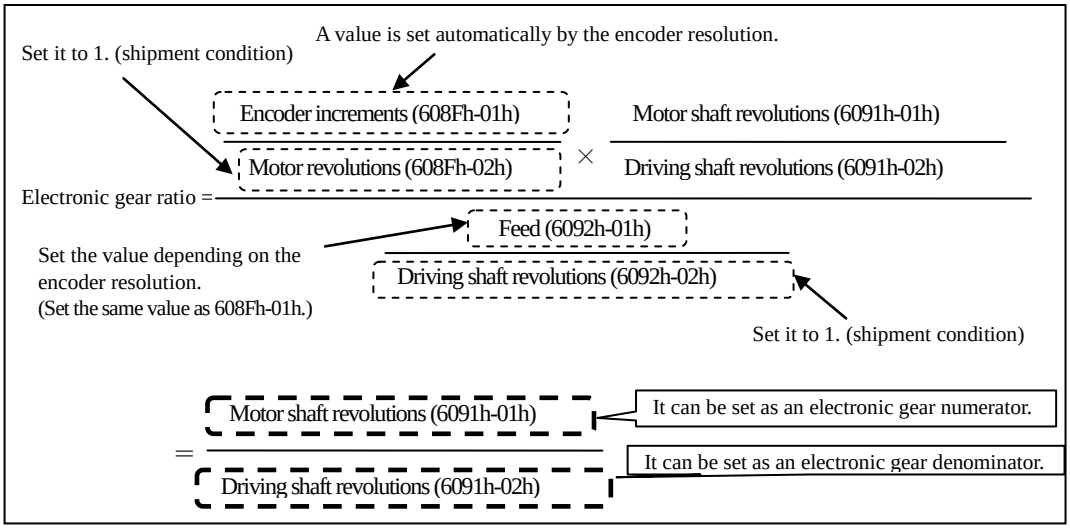

608Fh-01h (Encoder increments) is set automatically from the connected encoder resolution.
By setting 6092h-01h (Feed) to the encoder resolution (the same value as 608F-01h (Encoder increments), and in the case of the 23bit/r encoder, the shipment condition) and setting 608Fh-02h (Motor revolutions) and 6092h-02h (Driving shaft revolutions) to 1 (shipment condition), it is possible to set 6091h-01h (Motor shaft revolutions) to the “electronic gear numerator” and 6091h-02h (Driving shaft revolutions) to the “electronic gear denominator”.

<Backup of electronic gear set value>

The electronic-gear-related objects (6091h-01h, 6091h-02h, 6092h-01h and 6092h-02h) are backup target objects.
It is recommended to execute a backup (writing into EEPROM) after a change.
By executing a backup, it will be unnecessary to change setting each time when the control power is turned on.
As for the backup method, refer to Section 5-6 “Store parameters (EEPROM writing of objects) (1010h)”.

<Electronic gear setting and backup by object editor>

It is possible to set and back up objects using the object editor of PANATERM.
For the MINAS-A5B series, it was necessary to turn on the control power again after the backup in order to reflect the electronic gear setting value changed by using the object editor on the object.
As for the MINAS-A6B series, immediately reflected in the actual object,
The electronic gear setting values set by using the object editor are reflected on the object in the same manner as when the value of the object is changed via the aforementioned EtherCAT as same timing.
Unlike the MINAS-A5B series, note that the setting value is reflected on the object even if the control power is not turned ON again after the backup.

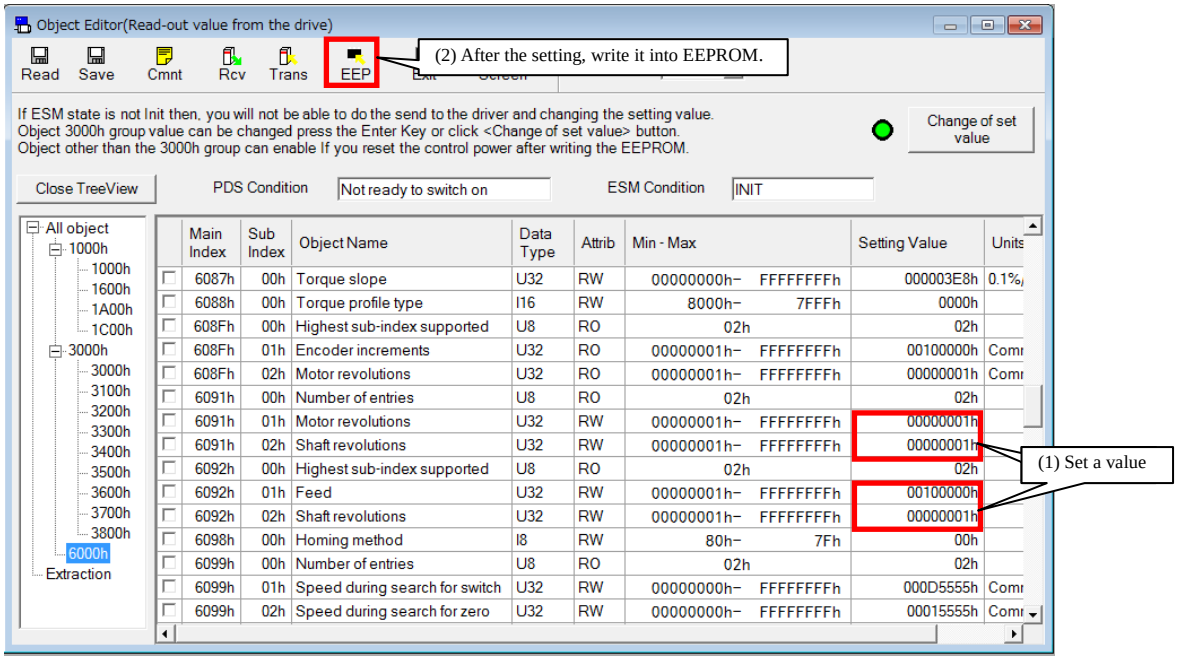

(a) Position encoder resolution(608Fh)

Index	Sub-Index	Name / Description	Units	Range	Data Type	Access	PDO	Op-mode	EEPROM
608Fh		Position encoder resolution	-	-	-	-	-	-	-
		• Encoder resolution is set automatically.							
	00h	Highest sub-index supported	-	2	U8	ro	No	ALL	No
		• Displays the number of sub-indexes of 608Fh.							
	01h	Encoder increments	pulse	1 - 4294967295	U32	ro	No	ALL	No
		• Indicate the moving amount of the encoder. Encoder resolution is set automatically as the value. Under full-closed control, encoder resolution is also set automatically.							
	02h	Motor revolutions	r (motor)	1 - 4294967295	U32	ro	No	ALL	No
		• Indicate the rotating speed of motor. The value fixs 1.							

This object defines the resolution of the encoder per motor revolution.

$$\text{Position encoder resolution} = \frac{\text{Encoder increments(608Fh - 01h)}}{\text{Motor revolutions(608Fh - 02h)}}$$

This object is set up automatically according to the information read out from a motor connected to the servo driver.

Example 1) When a 23bit/r encoder is connected.

608Fh-01h(Encoder increments) = 8388608
608Fh-02h(Motor revolutions) = 1
Position encoder resolution = 8388608 / 1 = 8388608

(b) Gear ratio(6091h)

Index	Sub-Index	Name / Description	Units	Range	Data Type	Access	PDO	Op-mode	EEPROM
6091h		Gear ratio	-	-	-	-	-	-	-
		• Set the gear ratio.							
	00h	Number of entries	-	2	U8	ro	No	ALL	No
		• Displays the number of sub-indexes of 6091h.							
	01h	Motor revolutions	r (motor)	1 - 4294967295	U32	rw	No	ALL	Yes
		• Set the rotating speed of motor.							
	02h	Shaft revolutions	r (shaft)	1 - 4294967295	U32	rw	No	ALL	Yes
		• Set the rotating speed of the shaft.							

This object defines the relationship between the rotating speeds of motor and shaft after the gearbox output.

$$\text{Gear ratio} = \frac{\text{Motor shaft revolutions(6091h - 01h)}}{\text{Driving shaft revolutions(6091h - 02h)}}$$

(c) Feed constant(6092h)

Index	Sub-Index	Name / Description	Units	Range	Data Type	Access	PDO	Op-mode	EEPROM
6092h		Feed constant	-	-	-	-	-	-	-
		• Set the feed constant. feed constant = feed / Shaft revolutions							
	00h	Highest sub-index supported	-	2	U8	ro	No	ALL	No
		• Displays the number of sub-indexes of 6092h.							
	01h	Feed	command	1 - 4294967295	U32	rw	No	ALL	Yes
		• Set the feed amount.							
	02h	Shaft revolutions	r (shaft)	1 - 4294967295	U32	rw	No	ALL	Yes
		• Set the rotating speed of the shaft.							

This object indicates the operating quantity per rotation of the shaft after the gearbox output.

$$\text{Feed constant} = \frac{\text{Feed(6092h - 01h)}}{\text{Driving shaft revolutions(6092h - 02h)}}$$

3) Polarity(607Eh)

It is possible to set the polarity (rotation direction of motor) for the position command, velocity command, and torque command, and their offset.

In MINAS-A6B series, a setup of the hand of cut by parameter Pr0.00 (Rotational direction) has not corresponded, the hand of cut is set up by object Polarity (607Eh) specified to CoE (CiA402).

In addition, object Polarity (607Eh) is not what replaced parameter Pr0.00 (hand-of-cut setup) as it was, It becomes effective when performing the target object of the following table data transfer between a CoE (CiA402) process division and a motor control process division.

Index	Sub-Index	Name / Description	Units	Range	Data Type	Access	PDO	Op-mode	EEPROM
607Eh	00h	Polarity	-	0 - 255	U8	rw	No	ALL	Yes

- Select the combination of the command polarities for the position command, velocity command, torque command input, position offset, velocity offset (adding velocity), torque offset (adding torque), position feedback, velocity feedback, and torque feedback from the followings:

Note:
Setting value of this object set 0(the value of bit7-5 is 0) set so that position, velocity, torque polarity is all the same. Also, set to 224(the value of bit 7-5 is 1).
Certified in other settings is not possible.

Setting value	Description
0	No reverse of sign of torque, velocity, position
224	Reverse of sign of torque, velocity, and position possible
Other than above	Not supported (Do not set)

bit 7: Position polarity
0: no sign inversion 1: sign inversion occurs

bit 6: Velocity polarity
0: no sign inversion 1: sign inversion occurs

bit 5: Torque polarity
0: no sign inversion 1: sign inversion occurs

bit4-0 : Reserved
- Set to 0.

Target object < Instructions / setting >
- 607Ah(Target position)
- 60B0h(Position offset)
- 60FFh(Target velocity)
- 60B1h(Velocity offset)
- 6071h(Target torque)
- 60B2h(Torque offset)

<Monitor >
- 4F04h(Position command internal value(after filtering))
- 6062h(Position demand value)
- 6064h(Position actual value)
- 606Bh(Velocity demand value)
- 606Ch(Velocity actual value)
- 6074h(Torque demand)
- 6077h(Torque actual value)
- 6078h(Current actual value)

< External input >
- 60FDh-00h(Digital input) is bit1(positive limit switch(POT))
- 60FDh-00h(Digital input) is bit0(negative limit switch(NOT))
- POT and NOT of external input signal

Data other than the target object in the table on the previous page, the setting of Polarity(607Eh) is reflected in the monitor data on the setup support tool PANATERM related to the object.
In addition, the settings of Polarity (607Eh) are reflected on POT/NOT during execution from PANATERM including test run function, frequency response analyzing function and Z phase serch function.
Note that operations are different from those of the MINAS-A5B series.
When Polarity(607Eh) is setting to reverse of sign, When you perform a test run etc., please be careful of the logic of the drive inhibition.

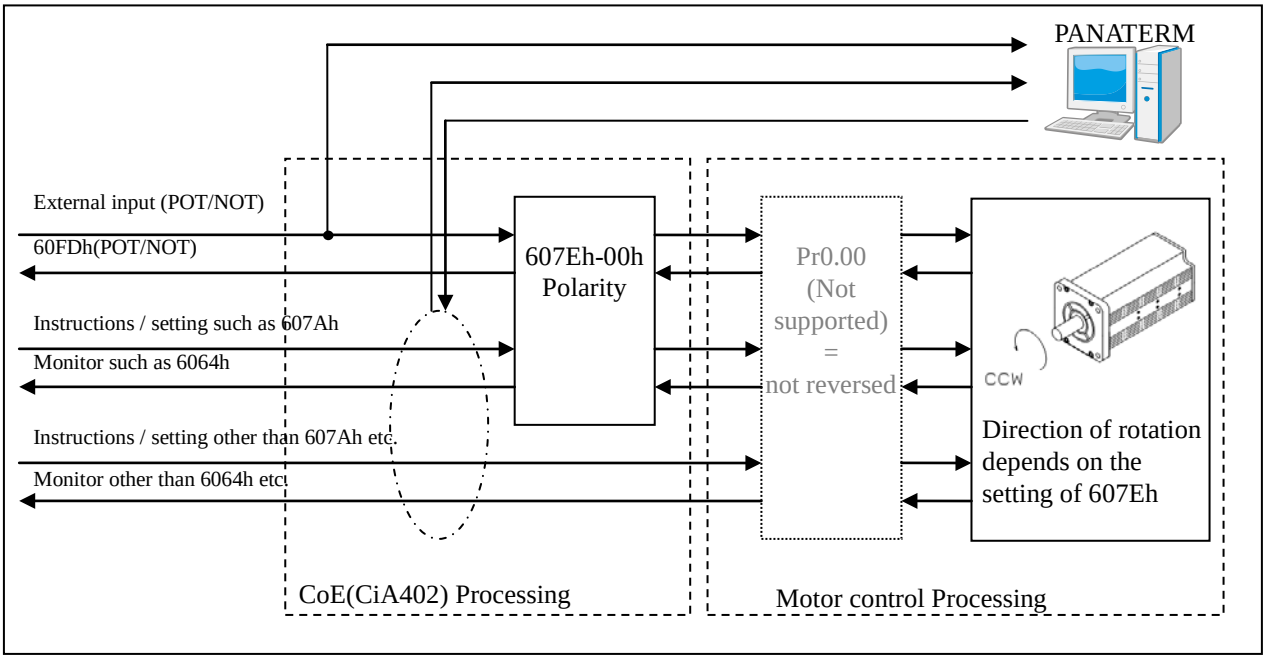

no sign inversion	:	Motor turns CCW in response to positive direction command.
sign inversion occurs	:	Motor turns CW in response to positive direction command.

*) The direction of motor rotation, it sees from the poll end of a load side, a clockwise rotation is defined as CW, and a counterclockwise rotation is defined as CCW.

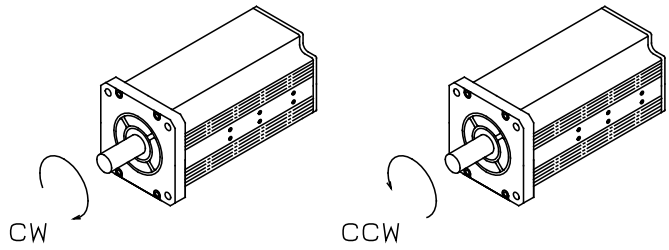

(Note) - Polarity(607Eh) setting is reflected at the following timing.
- At the time of the power supply ON
- When establishing communication (when changing ESM state from Init to PreOP)
- When PANATERM operation(test run function, frequency response analyzing function, Z phase search,fit gain) is completed.
- When setting pin assign by PANATERM.
- When Err27.4 (Command error protection) occurs (not supported by the first edition Ver1.01)

Note that the setting of Polarity is not reflected after returning to the origin, after multi-turn clearing of the absolute encoder.

- The fit gain function performs reciprocating motion of the motor several times.
When executing the fit gain function with changing only Polarity(607Eh)'s value without reflection, the polarity setting is reflected at finishing the first motor operation, and the second motor operation is reversed.
If excute the fit gain function, the setting of Polarity is reflected in advance.

4) Initialization of the absolute encoder(Semi-closed control)

Homing operation is not necessary with the absolute encoder at the position control mode (except when using the absolute encoder as the incremental mode). However, it is necessary to clear “Multi-turn data” at the first start up of the machine after installing the battery.

a) Absolute data

There are 2 types of data which are read out from the absolute encoder (23 bits/r), “Single-turn data” which shows the position of motor’s rotation within a single turn, and “Multi-turn data” which counts each single turn. This Multi-turn data will be backed up by a battery since this is an electrical counter.
Both data have a polarity to increase in the direction of CCW which seen from the motor shaft end.

Be able to select whether Err. 41.0, “Absolute encoder counter overflow” will be generated or not when Multi-turn data has overflowed, with the parameter, “Absolute encoder setup” (3015h).

	Back up at control power off	Data width	+/- Sign	Data range
Single-turn data	Not necessary	23 bit	Unsigned	0-8388607
Multi-turn data	Backed up by battery	16 bit	Signed	0～65535(max.) *1)

*1) In continuous rotating absolute mode, the upper limit can be set with 3688h(Absolute encoder multi-turn data upper-limit value).
It is 65535(maximum value) in non continuous rotating absolute mode.
For details on the continuous rotating absolute mode, refer to Chapter 6-7 of the specification for basic functions(SX-DSV03241).

In this servo driver, the position information is initialized at the timing described in 6-9-4 "1) Timing of initialization of position information".
Since single-turn data is 23-bit width and multi-turn data is 16-bit width, the width of the synthetic data will be 39-bit width, but the value to set for the object as position information is 32-bit width.

6063h sets only lower 32 bits of the absolute encoder data as position information so that 7bits in the highest order of multi-turn data (16bits) are lost, and the effective bit length will be 9 bits.
6064h calculates the position information according to the following formula and the position information after calculation will be 32-bit width.
Therefore, the effective bit length of the multi-turn data fluctuates according to the electronic gear reverse conversion value.
In addition, if the caluculated value of $((M\times2^{23} + S) \times$ Electronic gear reverse conversion value) exceeds 32-bit width, the Err29.1 (Counter overflow protection1) occurs.

607Eh (Polarity)	position information
When set to 0 (CCW is positive direction)	$6063h = M\times2^{23} + S$ *Effective bit length of M is 9 bits.
	$6064h = ((M\times2^{23} + S) \times$Electronic gear reverse conversion value) + 607Ch *Effective bit length of M is 16bits maximum. Example: If the electronic gear reverse conversion value is 0.5, the effective bit length is 10 bits.
When set to 224 (CW is positive direction)	$6063h = M\times2^{23} + S$ *Effective bit length of M is 9 bits.
	$6064h = - ((M\times2^{23} + S) \times$Electronic gear reverse conversion value) + 607Ch *Effective bit length of M is 16bits maximum. Example: If the electronic gear reverse conversion value is 0.5, the effective bit length is 10 bits.

6063h：Position actual internal value
6064h：Position actual value
607Ch：Home offset

M ：Multi-turn_Data

S ：Single-turn_Data

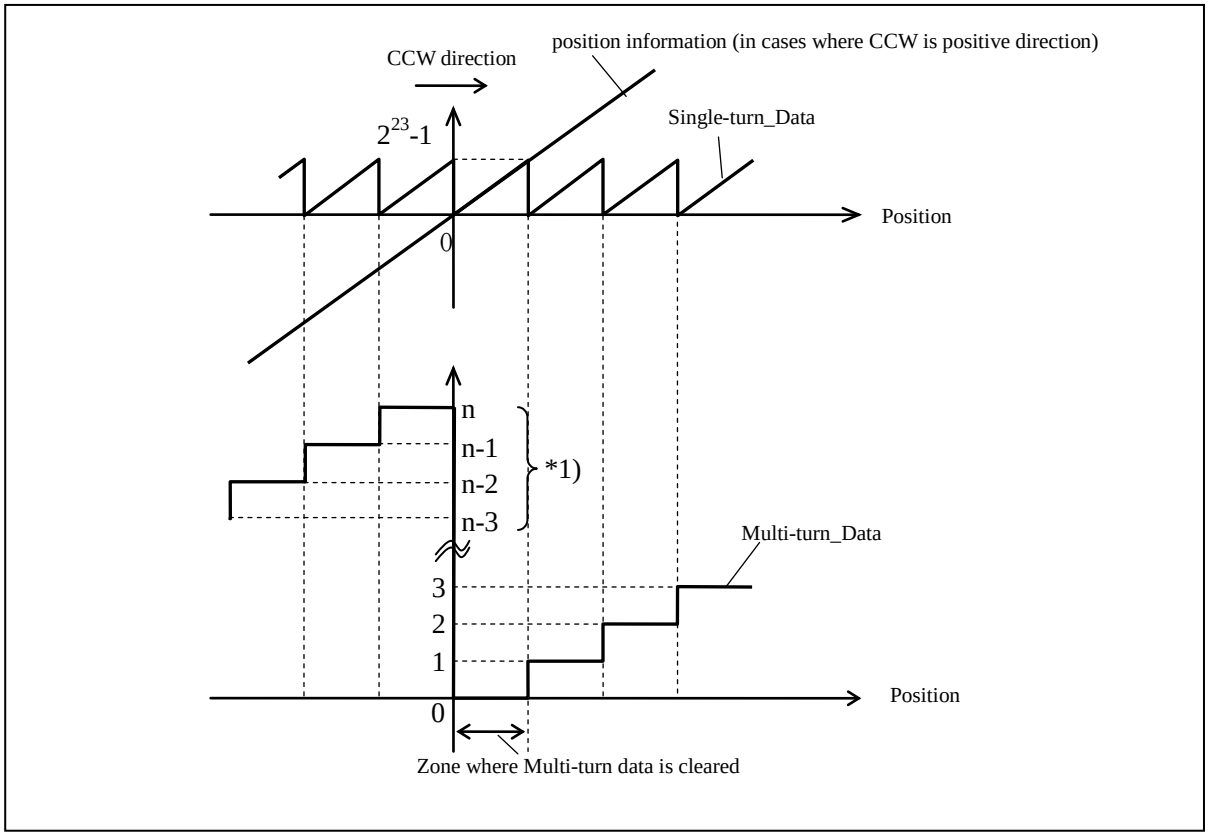

*1) The value of n is as follows.
Infinitely rotatable absolute encoder mode: n = Setting value of 3688h
Other than infinitely rotatable absolute encoder mode: n = 65535

Position information treated by this servo driver becomes 32-bit width data. If the position information of the absolute encoder of 33 bits or more, the position information can be calculated with the following formula.
Please multiply this result by the reciprocal of electronic gear ratio when using electronic gear.

$$\text{4F41h-02h (Multi-turn data)} \times 2^{23} + \text{4F41h-01h (Single-turn data)}$$

To obtain accurate position information, 4F41h-01h and 4F41h-02h should be allocated to TxPDO.
When not allocating 4F41h-01h and 4F41h-02h to TxPDO, data should be read at the same timing as much as possible with SDO.
In that event, there may be an approximate one-turn difference in the vicinity of the changing point of the multi-turn data, and the data to be used should be that read when the motor has stopped in a position near the farthest position where single-turn data is 222 instead of the data read in the vicinity of the changing point of the multi-turn data.
* The first edition of the software version (V1.01) does not support 4F41h-01h and 4F41h-02h allocation to TxPDO.

b) Clearing multi-turn data

When clearing multi-turn data, zero position will be multi-turn transition point at CW side in the zone where cleared.
The multi-turn data may change intermittently in the vicinity of the changing point of the multi-turn data.
So, clearing multi-turn data at this point may causes the actual position 0 to deviate by 1 rotation.

In order to avoid it, execute the clearing operation at the position where single-turn data is 2^{22} which is the farthest from the transition point of multi-turn data.

< Notes to avoid a trouble >
Execute this process (clear multi-turn data) in Servo-OFF, and in fixing the moving parts by brake etc. if necessary, and in confirming safety.
Keep Servo-OFF until data clearing completes.
After that, turn off control power once, and turn on the power again.

Multi-data is cleared via the setup support software PANATERM (USB communication) or EtherCAT communication.

If multi-turn data is cleared via the setup support software “PANATERM” (USB communication),
Err. 27.1, “Motion command error” will occur. However, this is not a problem because of a step for safety.

In via EtherCAT communication, multi-turn data clearing operation is possible to run using the 4D00h-01h(Special function start flag 1) and 4D01h-00h(Special function setting 9).
Set the 4D01h-00h(Special function setting 9) to 0031h, and change the bit9 of 4D00h-01h from 0 to 1, the multi-turn data clearing operation will run.

In hm mode, bit12 of 6041h (homing attained) become 0 when the multi-turn data clear run.
After the multi-turn data clear completion, bit12 of 6041h (homing attained) will return to 1.

Index	Sub-Index	Name / Description	Units	Range	Data Type	Access	PDO	Op-mode	EEPROM
4D00h	-	Special function start	-	-	-	-	-	-	-
		Run a special function in accordance with the set value of 4D01h-00h.							
	00h	Number of entries	-	2	U8	ro	No	ALL	No
		Displays the number of sub-indexes for 4D00h.							
	01h	Special function start flag 1	-	0 – 4294967295	U32	rw	No	ALL	No
		bit9 : At the rising edge(0->1) detection of this bit, run the special function in accordance with the set value of 4D01h-00h. After setting this bit to 1, please return to 0 at any time. Even if return this bit to 0 during running the special function, the special function will continue.							
	02h	Special function start flag 2	-	0 – 4294967295	U32	rw	No	ALL	No
		For manufacturer’s use (Please do not change from the default value(0).)							
4D01h	00h	Special function setting 9	-	0 – 65535	U16	rw	No	ALL	No
		Set value of the following table to this object, and rise(0->1) the bit9 of 4D00h-01h, run the special function in accordance with the set value of 4D01h-00h. After the special function performed, the value of this object will return to 0000h. In the state that it can not multi-turn data clear, the abort message occurs when rise bit9 of 4D00h-01h . In this case, the object does not return to 0000h.							

Value	Function
0000h	do nothing.
0031h	Absolute encoder multi-turn data clear
Other than the above	Action indefinite. Please do not set.

< Precautions for multi-turn data clear via EtherCAT communication>

・Execute in servo-off.
・Do not execute the multi-turn data clear during running the touch probe function.
・Do not execute the ESM transition during running the multi-turn data clear.
・Do not do not change the control mode during running the multi-turn data clear.
・Do not execute multi-turn data clearing and battery refresh via PANATERM during multi-turn data clearing via EtherCAT communication.

・If run multi-turn data clear via EtherCAT communication in the following state, the driver returns the Abort Message “08000022h”.
After confirming that the driver is not in the following state, run the multi-turn data clear via EtherCAT communication.

・servo-on state.
・During running the multi-turn data clear (via EtherCAT communication)
・During running the multi-turn data clear (via PANATERM)
・When using incremental encoder
・During running the touch probe function
・When the single-turn absolute mode(3015h=3)

※When an Abort Message occurs, 4D01h-00h(Special function setting 9) does not return to 0000h.

・When execute the multi-turn data clear via EtherCAT communication, Err27.1(Absolute clear protection) does not occur.

5) Position range limit (607Bh)

If the value of 607Ah(Target position) exceeds 607Bh(Position range limit), operated wraparound processing.
In the absolute system, the same wraparound process operates.
However, in csp mode or absolute positioning by pp mode in the continuous rotating absolute encoder mode, no wraparound is performed and Err91.1 (Command error protection) occurs.
* Err91.1 (command error protection) does not occur with the first edition of software version (V1.01).
Please set so that the value of 607Ah (Taget position) does not exceed 607Bh (Position range limit).
For modes other than continuous rotating absolute encoder mode, the values are internally processed as 607Bh-01h=80000000h and 607Bh-02h=7FFFFFFFh.

Index	Sub-Index	Name / Description	Units	Range	Data Type	Access	PDO	Op-mode	EEPROM
607Bh		Position range limit	-	-	-	-	-	-	-
		• Set the boundary position coordinates wrap around.							
	00h	Highest sub-index supported	-	2	U8	ro	No	ALL	No
		• Displays the number of sub-indexes for 607Bh (Position range limit).							
	01h	Min position range limit	Command	-2147483648 - 2147483647	I32	rw	RxPDO	ALL	Yes
		・When the position coordinate falls below this setting value (minimum value), the value is wrapped around to the other range (maximum value). In continuous rotating absolute encoder mode, the value calculated with the internal processing is automatically set. For modes other than continuous rotating absolute encoder mode, the value is internally treated as 80000000h(shipment setting value).							
	02h	Max position range limit	Command	-2147483648 - 2147483647	I32	rw	RxPDO	ALL	Yes
		・When the position coordinate exceeds this setting value (maximum value), the value is wrapped around to the other range (minimum value). In continuous rotating absolute encoder mode, the value calculated with the internal processing is automatically set. For modes other than continuous rotating absolute encoder mode, the value is internally treated as 7FFFFFFFh (shipment setting value).							

[Example of wraparound process]
607Bh-01h(Min position range limit) = 80000000h
607Bh-02h(Max position range limit) = 7FFFFFFFh
In the above case, when 607Ah changes from 7FFFFFFFh to 80000000h.
(absolute positioning mode)

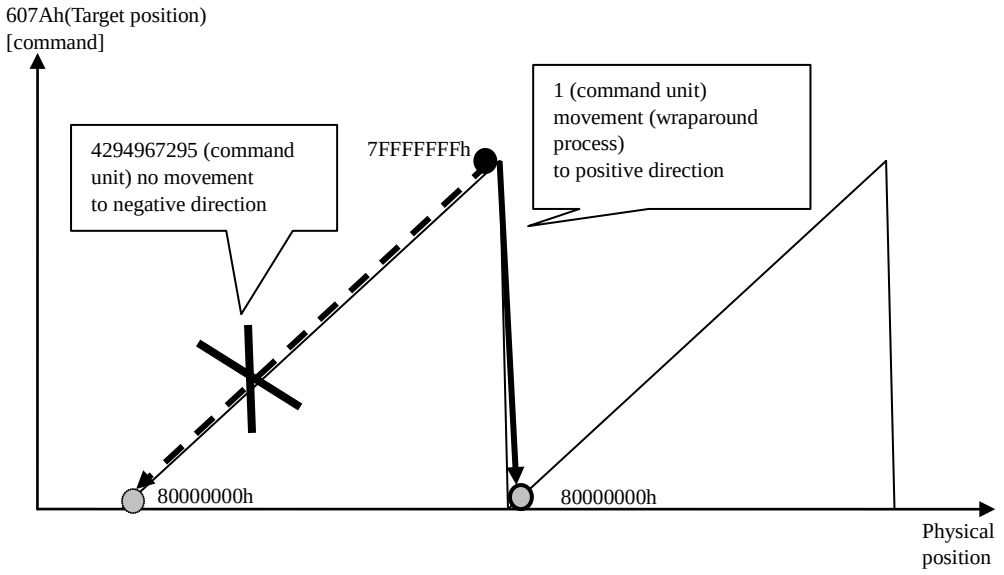

6) Home offset (607Ch)

Updating of this object is always possible, but it is reflected in the actual position information at the following timing.
- At the time of the power supply ON
- When establishing communication (when changing ESM state from Init to PreOP)
- When returning to origin is completed
- When clearing absolute multi-turn from PANATERM or EtherCAT communication
- When PANATERM operation(test run function, frequency response analyzing function, Z phase search,fit gain) is completed.
- When setting pin assign by PANATERM.
- When Err27.4 (Command error protection) occurs (not supported by the first edition Ver1.01)

The following objects are initialized (preset) based on the position at the aforementioned timing.

- When home position is detected
  6063h(Position actual internal value) = 60FCh(Position demand internal value) = 0
  6062h(Position demand value) = 6064h(Position actual value) = 607Ch(Home offset)

- When initialize position except detecting home position
  6063h(Position actual internal value) = 60FCh(Position demand internal value)
  6062h(Position demand value) = 6064h(Position actual value)
  = 6063h(Position actual internal value) + 607Ch(Home offset)

Note: The above descriptions are for cases where the electronic gear ratio is 1:1 and polarity is not reversed.

Index	Sub-Index	Name / Description	Units	Range	Data Type	Access	PDO	Op-mode	EEPROM
607Ch	00h	Home offset	Command	-2147483648 - 2147483647	I32	rw	RxPDO	ALL	Yes
		• After completing the homing position control mode (hm), position information is set so that the detected index pulse position becomes equal to the value of this object. Also, the value of this object is added to the position information at the following timing. - At the time of the power supply ON - When establishing communication (when changing ESM state from Init to PreOP) - When returning to origin is completed - When clearing absolute multi-turn from PANATERM or EtherCAT communication - When PANATERM operation(test run function, frequency response analyzing function, Z phase search,fit gain) is completed. - When setting pin assign by PANATERM. - When Err27.4 (Command error protection) occurs (not supported by the first edition Ver1.01)							

Note: If you do homing, the position information is reset. Therefore, it is necessary is re-acquired data acquired by the old coordinate system (for example, Touch probe position).

Home position: Position of the Index pulse (home position)
Zero position: In incremental system
= 0 (position which subtracted Home offset from the position at the time of power activation, or the position of Index pulse detected by hm)
In absolute system
= Under semi-closed control:zero position of absolute encoder
Under full-closed control: zero position of absolute external scale

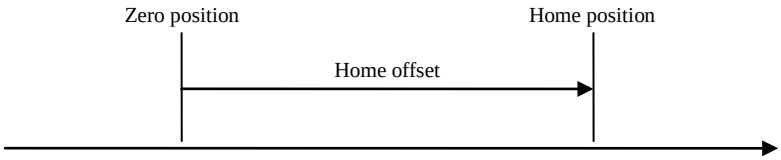

<Home offset definition>

7) Initialization of the absolute scale (Full-closed control)

With the absolute scale under full-closed control, 48-bit width position information is composed of low 24-bit and high 24-bit external scale position data, but the value set for the object as position information is in 32-bit width.

With respect to 6063h, only low 32-bit absolute encoder data is set as position information, and only low 8 bits are significant in the case of high 24-bit data.
With respect to 6064h, position information is calculated based on the following formula, and the calculated position information will be in 32-bit width.
Therefore, the significant bit length of external scale position data under full-closed control varies depending on the electronic gear reverse conversion value.

Under full-closed control, if the value calculated by ((L+H) * Electronic gear reverse conversion value) exceeds the 32-bit width or if the denominator or numerator exceeds the 64-bit size in the process of the calculation above, Err29.1 (Counter overflow protection 1) occurs.

607Eh (Polarity)	position information
When set to 0 (CCW is positive direction)	6063h = (L＋H) *Effective bit length of H is 8 bits.
	6064h = ((L＋H) × Electronic gear reverse conversion value) + 607Ch *Effective bit length of H is 21 bits.
When set to 224 (CW is positive direction)	6063h = (L＋H) *Effective bit length of H is 8 bits.
	6064h = -((L＋H) × Electronic gear reverse conversion value) + 607Ch *Effective bit length of H is 21 bits.

6063h：Position actual internal value
6064h：Position actual value
607Ch：Home offset

L ：External scale data (Lower 24bit) External scale position information Lower 24bit

H ：External scale data (Higher 24bit) External scale position information Higher 24bit

6-9-5 Jerk (Not supported)

This function is not supported by this software version. Set 6086h (Motion profile type) to 0.

By setting up Jerk, the change rate of the degree of acceleration and deceleration can be smoothed.

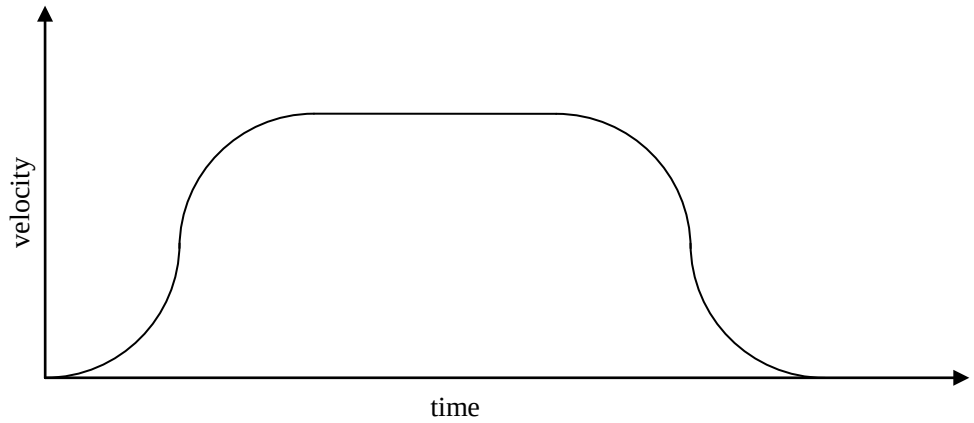

<Velocity/time diagram with jerk positions>

This function cannot be used because it is not supported.
Also, can smooth using 3222h(Positional command smoothing filter) and 3223h(Positional command FIR filter).
For more information, refer to Basic function specifications of the Technical document(SX-DSV03241).

6-9-6 Interpolation time period (60C2h)

60C2h(Interpolation time period) is set up automatically as follows with a communication cycle.
Please do not change.

communication cycle	60C2h-01h	60C2h-02h
125us	125	-6
250us	25	-5
500us	5	-4
1ms	1	-3
2ms	2	-3
4ms	4	-3

Index	Sub-Index	Name / Description	Units	Range	Data Type	Access	PDO	Op-mode	EEPROM
60C2h	-	Interpolation time period	-	-	-	-	-	-	-
		• Set the interpolation time cycle.							
	00h	Highest sub-index supported	-	2	U8	ro	No	ip csp csv cst	No
		• Displays the number of sub-indexes for 60C2h (Interpolation time period).							
	01h	Interpolation time period value	-	0 - 255	U8	rw	No	ip csp csv cst	Yes
		• Set the interpolation time cycle value. Set up automatically with a communication cycle.							
	02h	Interpolation time index	-	-128 – 63	I8	rw	No	ip csp csv cst	Yes
		• Set the interpolation time index. Set up automatically with a communication cycle.							

6-9-7 Servo information monitor object

This is the object for monitoring information owned by the servo driver.

Index	Sub-Index	Name / Description	Units	Range	Data Type	Access	PDO	Op-mode	EEP ROM
4308h	00h	History number	-	0 - 3	U8	rw	No	ALL	No
		・Select alarm incidental information to be displayed at 4DA0h(Alarm accessory information). When set to 0, displays incidental information of the current alarm. When set to 1 to 3, displays supplementary information on alarms from 1 to 3 before the alarm that occurred in the past.							
4310h	00h	Alarm main no	-	0 - 127	U8	rw	No	ALL	No
		・Select the alarm sub-number information to display with 4F37h-10h(Multiple sub alarm information). The alarm sub number information of the alarm main number set in this object is displayed.							
4D10h	-	External scale ID	-	-	-	-	-	-	-
		・The external scale ID is displayed.							
	00h	Number of entries	-	2	U8	ro	No	ALL	No
		・The number of Sub-Index of 4D10h (External scale ID) is displayed.							
	01h	External scale vendor ID	-	-	VS	ro	No	ALL	No
		・The vendor ID of the external scale ID is displayed. ‘3’...Mitutoyo Corporation ‘4’...Magnescale Co., Ltd. ‘5’...Common ID (Panasonic communication specification)							
	02h	External scale model ID	-	-	VS	ro	No	ALL	No
		・The model ID of the external scale is displayed.							

Vendor name	Model ID	Absolute/Incremental
Mitutoyo Corp.	‘1’	Absolute
	‘2’	Absolute (Electromagnetic induction type)
	‘3’	Incremental
Magnescale Co., Ltd.	‘1’	Absolute
	‘2’	Incremental
	‘3’	Incremental (Laser scale)
Common ID (Panasonic communication specification)	‘1’	Absolute
	‘2’	Incremental

4D12h	00h	Motor serial number	-	-	VS	ro	No	ALL	No
		・The motor serial number is displayed. (A maximum of 8 characters) Example: “17040021”							
4D15h	00h	Drive serial number	-	-	VS	ro	No	ALL	No
		・The amplifier serial number is displayed. (A maximum of 8 characters) Example: “17100001” (Note) The first edition of the software version (Ver1.01) does not support this.							
4D29h	00h	Over load factor	0.1%	0 – 65535	U16	ro	TxPDO	ALL	No
		・The overload factor (ratio to the motor rated load) is displayed. (Note) It is not supported in software versions corresponding to function extended edition 1 (Ver1.02) or earlier.							

Index	Sub-Index	Name / Description	Units	Range	Data Type	Access	PDO	Op-mode	EEPROM
4DA0h	-	Alarm accessory information	-	-	-	-	-	-	-
		・The supplementary information of the alarm specified by 4308h (History number) is displayed. - When 4308h (History number)=0 is set, the supplementary information of the current alarm is displayed. - When 4308h (History number) = 1 to 3 is set, supplementary information on previous alarms from 1 to 3 that occurred in the past is displayed.							
	00h	Number of entries	-	36	U8	ro	No	ALL	No
		・The number of Sub-Index of 4DA0h (Alarm accessory information) is displayed.							
	01h	History number echo	-	0 - 3	U8	ro	No	ALL	No
		・Echo back of the history number set with 4308h (History number) is displayed.							
	02h	Alarm code	-	0 - 4294967295	U32	ro	No	ALL	No
		・Alarm code is displayed. bit31-15: Used by manufacturer bit14-8: Alarm main numbers bit7-0: Alarm sub numbers							
	03h	Control mode	-	-2147483648 – 2147483647	I32	ro	No	ALL	No
		・Control mode is displayed. 0: Position control mode 1: Velocity control mode 2: Torque control mode 3: Full closed control mode							
	04h	Motor speed	r/min	-2147483648 – 2147483647	I32	ro	No	ALL	No
		・Motor speed is displayed.							
	05h	Positional command velocity	r/min	-2147483648 – 2147483647	I32	ro	No	ALL	No
		・Position command velocity is displayed.							
	06h	Velocity control command	r/min	-2147483648 – 2147483647	I32	ro	No	ALL	No
		・Velocity control command is displayed.							
	07h	Torque command	0.05%	-2147483648 – 2147483647	I32	ro	No	ALL	No
		・Torque command is displayed.							
	08h	Position command deviation	Command	-2147483648 – 2147483647	I32	ro	No	ALL	No
		・Position command deviation is displayed.							
	09h	Position actual internal value	pulse	-2147483648 – 2147483647	I32	ro	No	ALL	No
		・Motor position is displayed.							
	0Bh	Input port (logic signal)	-	-2147483648 – 2147483647	I32	ro	No	ALL	No
		・Input port (logic signal) is displayed.							
	0Ch	Output port (logic signal)	-	-2147483648 – 2147483647	I32	ro	No	ALL	No
		・Output port (logic signal) is displayed.							
	0Dh	Analog input	-	-2147483648 – 2147483647	I32	ro	No	ALL	No
		・Analog input is displayed.							
	10h	Overload ratio	0.2%	-2147483648 – 2147483647	I32	ro	No	ALL	No
		・Overload ratio is displayed.							
	11h	Regenerative load ratio	%	-2147483648 – 2147483647	I32	ro	No	ALL	No
		・Regenerative load ratio is displayed.							
	12h	Voltage across PN	V	-2147483648 – 2147483647	I32	ro	No	ALL	No
		・Voltage across PN is displayed.							
	13h	Temperature of amplifier	°C	-2147483648 – 2147483647	I32	ro	No	ALL	No
		・amplifier temperature is displayed.							

Index	Sub-Index	Name / Description	Units	Range	Data Type	Access	PDO	Op-mode	EEPROM
4DA0h	14h	Warning flags	-	-2147483648 – 2147483647	I32	ro	No	ALL	No
		・Warning flags are displayed. Bit assignment is as follows.							
	15h	Inertia ratio	%	-2147483648 – 2147483647	I32	ro	No	ALL	No
		・Inertia ratio is displayed.							
	19h	Temperature of encoder	°C	-2147483648 – 2147483647	I32	ro	No	ALL	No
		・Encoder temperature is displayed.							
	1Dh	U-phase current detection value	-	-2147483648 – 2147483647	I32	ro	No	ALL	No
		・U-phase current detection value is displayed.							
	1Eh	W-phase current detection value	-	-2147483648 – 2147483647	I32	ro	No	ALL	No
		・W-phase current detection value is displayed.							
	21h	Encoder single-turn data	-	-2147483648 – 2147483647	I32	ro	No	ALL	No
		・Encoder single-turn data is displayed.							
	22h	Encoder communication error count (accumulated)	times	-2147483648 – 2147483647	I32	ro	No	ALL	No
		・Number of continuous occurrences of encoder communication errors (Accumulated value) is displayed.							
	23h	External scale communication data error count (accumulated)	times	-2147483648 – 2147483647	I32	ro	No	ALL	No
		・Number of continuous occurrences of external scale communication errors (Accumulated value) is displayed.							

bit7	6	5	4	3	2	1	0
Overload	Fan lock	Over-regeneration	Encoder communication	Encoder overheat	Lifetime detection	-	Battery warning

bit15	14	13	12	11	10	9	8
-	scale communication	Oscillation detection	Main power off	-	-	-	scale error

bit23	22	21	20	19	18	17	16
-	-	-	-	-	-	-	-

bit31	30	29	28	27	26	25	24
-	-	-	-	-	-	-	-

*4DA0h(Alarm accessory information) does not support PDO.
Since each Sub-Index is read from SDO communication, simultaneity can not be guaranteed.

Index	Sub-Index	Name / Description	Units	Range	Data Type	Access	PDO	Op-mode	EEPROM
4F01h	00h	Following error actual value (after filtering) ・Position deviation (after filtering) is displayed.	command	-2147483648 - 2147483647	I32	ro	TxPDO	pp hm csp	No
4F04h	00h	Position command internal value (after filtering) ・Internal command position (after filtering) is displayed.	command	-2147483648 - 2147483647	I32	ro	TxPDO	pp hm csp	No
4F0Ch	00h	Velocity command value (after filtering) ・Command speed (after filtering) is displayed. *This object displays the same value as 4FA5h (Velocity internal position command). Please use 4FA5h when monitoring.	r/min	-2147483648 - 2147483647	I32	ro	TxPDO	pp hm csp	No
4F0Dh	00h	External scale position ・Position of the external scale is displayed.	pulse (external scale)	-2147483648 - 2147483647	I32	ro	TxPDO	ALL	No
4F11h	00h	Regenerative load ratio ・Regenerative load ratio (ratio of the regenerative overload protection to the alarm occurrence level) is displayed.	%	-2147483648 - 2147483647	I32	ro	TxPDO	ALL	No
4F21h	00h	Logical input signal ・Logic level of input signal is displayed.	-	0 – 4294967295	U32	ro	TxPDO	ALL	No

bit7	6	5	4	3	2	1	0
Forced alarm input (E-STOP)	-	-	-	Positive direction over-travel inhibition input (POT)	Negative direction over-travel inhibition input (NOT)	External alarm clear input (A-CLR)	-

bit15	14	13	12	11	10	9	8
-	-	-	-	-	-	-	-

bit23	22	21	20	19	18	17	16
-	-	-	-	-	-	-	-

bit31	30	29	28	27	26	25	24
Dynamic brake switching input (DB-SEL)	-	-	Safety input2 (SF2)	Safety input1 (SF1)	-	-	-

Index	Sub-Index	Name / Description	Units	Range	Data Type	Access	PDO	Op-mode	EEP ROM
4F22h	00h	Logical output signal	-	0 – 4294967295	U32	ro	TxPDO	ALL	No

・Logic level of output signal is displayed.

bit7	6	5	4	3	2	1	0
-	Speed matching output (V-COIN)	Torque in-limit signal output (TLC)	Zero-speed detection output signal (ZSP)	External brake release signal (BRK-OFF)	Positioning complete output (INP)	Alarm output (ALM)	Servo-Ready output (S-RDY)

bit15	14	13	12	11	10	9	8
Servo on status output (SRV-ST) *1)	-	-	-	-	Deterioration diagnosis speed output (V-DIAG) *4)	At-velocity output (AT-SPEED)	-

bit23	22	21	20	19	18	17	16
EDM output (EDM)	Velocity command ON/OFF output (V-CMD)	Alarm attribute output (ALM-ATB)	Speed in-limit output (V-LIMIT)	Positioning complete output 2 (INP2)	Positional command ON/OFF output (P-CMD)	Warning output 2 (WARN2)	Warning output 1 (WARN1)

bit31	30	29	28	27	26	25	24
-	STO status monitor output (STO) *2)*3)	-	-	-	-	-	General purpose output (EX-OUT1)

*1) 0 indicates the servo ON status and 1 indicates the servo OFF status.
*2) Please refer to the Basic function specification edition (SX-DSV03241) for STO status.
*3) STO status monitor output signal is not a safety related part.
*4) The first edition of the software version (Ver1.01) does not support deterioration diagnosis speed output.

Index	Sub-Index	Name / Description	Units	Range	Data Type	Access	PDO	Op-mode	EEP ROM
4F23h	00h	Logical input signal (expansion portion)	-	0 – 4294967295	U32	ro	TxPDO	ALL	No

・Logical level of input signal (extended portion) is displayed.

bit7	6	5	4	3	2	1	0
-	-	-	Origin proximity input (HOME)	-	-	External latch input 2 (EXT2)	External latch input 1 (EXT1)

bit15	14	13	12	11	10	9	8
-	-	Retracting operation input (RET) *1)	-	-	-	-	-

bit23	22	21	20	19	18	17	16
-	General purpose monitor input 5 (SI-MON5)	General purpose monitor input 4 (SI-MON4)	General purpose monitor input 3 (SI-MON3)	General purpose monitor input 2 (SI-MON2)	General purpose monitor input 1 (SI-MON1)	-	-

bit31	30	29	28	27	26	25	24
-	-	-	-	-	-	-	-

*1) The first edition of the software version (Ver1.01) does not retracting operation input.

Index	Sub-Index	Name / Description	Units	Range	Data Type	Access	PDO	Op-mode	EEP ROM
4F25h	00h	Physical input signal	-	0 – 4294967295	U32	ro	TxPDO	ALL	No

・Physical level of input signal is displayed.

bit7	6	5	4	3	2	1	0
SI8 input	SI7 input	SI6 input	SI5 input	SI4 input	SI3 input	SI2 input	SI1 input

bit15	14	13	12	11	10	9	8
-	-	-	-	-	-	-	-

bit23	22	21	20	19	18	17	16
-	-	-	-	-	-	-	-

bit31	30	29	28	27	26	25	24
-	-	-	-	-	-	-	-

4F26h	00h	Physical output signal	-	0 – 4294967295	U32	ro	TxPDO	ALL	No

・Physical level of output signal is displayed.

bit7	6	5	4	3	2	1	0
-	-	-	-	-	SO3 output	SO2 output	SO1 output

bit15	14	13	12	11	10	9	8
-	-	-	-	-	-	-	-

bit23	22	21	20	19	18	17	16
-	-	-	-	-	-	-	-

bit31	30	29	28	27	26	25	24
-	-	-	-	-	-	-	-

4F31h	00h	Inertia ratio	%	-2147483648 - 2147483647	I32	ro	No	ALL	No

・Inertia ratio is displayed.
The ratio of load inertia to the motor’s rotor inertia (equivalent of value of 3004h)
Inertia ratio = (load inertia/rotor inertia) x 100

4F32h	00h	Motor automatic identification	-	-2147483648 - 2147483647	I32	ro	No	ALL	No

・Enabled state of automatic motor identification is displayed.
0: Automatic identification is invalid.
1: Automatic identification is valid.

Index	Sub-Index	Name / Description	Units	Range	Data Type	Access	PDO	Op-mode	EEP ROM
4F33h	00h	Cause of motor no work	-	-2147483648 - 2147483647	I32	ro	No	ALL	No

・The number which shows the cause that the motor is not running is displayed.

Cause number *1)	item	Contents *2)
0	No cause	Any cause of no revolution cannot be detected. The state that the motor normally rotates.
1	Not in servo ready state	・ The main power of the servo driver has not been turned on or some kind of errors is occurring. ・ Synchronization between communication and servo is not established. Due to the aforementioned reasons, the servo ready is off.
2	Servo On command is not given to the servo driver	The Servo On command is not given to the servo driver. ・The PDS state is not “Operation enabled”, etc.
3	Over-travel inhibit input active	Pr5.04=0, 1 (Over-travel inhibit input active) ・Positive drive inhibit input (POT) is ON and operation command is positive direction. ・Negative drive inhibit input (NOT) is ON and operation command is negative direction. Pr5.04=2 (Occurrence of alarm with over-travel inhibit input) ・Positive drive inhibit input (POT) or Negative drive inhibit input (NOT) is ON regardless of operation command input.
4	Torque limit value too small	Valid torque limit value is set to 5% or below the rated value.
7	Too low frequency of position command input	Position command per control period is 1 command unit or smaller.
10	Too low command speed through EtherCAT communication	The command speed through EtherCAT communication is set at 30 [r/min] or lower.
11	Manufacturer use	—
12	Too low command torque through EtherCAT communication	The command torque from EtherCAT communication is low: 5% or below the rated value.
13	Speed limit too low	The speed limit value of 6080h is set to 30[r/min] or below.
14	Other causes	Above mentioned 1 to 13 cases are not available and the motor does not rotate. (Too small command value, too heavy load, locking, crashing, driver/motor failure, etc.)

*1) Even if the value that was read out was other than 0, the motor may revolve.
*2) The position command generation process may be interrupted by over-travel inhibit input, resulting detection of cause 7 instead of cause 3.

Index	Sub-Index	Name / Description	Units	Range	Data Type	Access	PDO	Op-mode	EEPROM
4F34h	00h	Warning flags	-	-2147483648 - 2147483647	I32	ro	No	ALL	No

・The flag indicating the status of warnings that are currently occurring is displayed.
Bit assignment is as follows.

bit7	6	5	4	3	2	1	0
Overload	Fan lock	Over-regeneration	Encoder communication	Encoder overhea	Lifetime detection	-	Battery warning

bit15	14	13	12	11	10	9	8
-	scale communication	Oscillation detection	Main power off	-	-	-	scale error

bit23	22	21	20	19	18	17	16
Deterioration diagnosis	-	-	-	-	-	-	-

bit31	30	29	28	27	26	25	24
-	-	-	-	-	-	-	PANATERM command execution

4F37h	-	Multiple alarm/warning information	-	-	-	-	-	-	-

・The information of alarms and warnings that are currently occurring is indicated to an applicable bit.

	00h	Number of entries	-	18	U8	ro	No	ALL	No

・The number of Sub-Index of 4F37h (Multiple alarm/warning information) is displayed.

	01h	Multiple alarm information 1	-	-2147483648 - 2147483647	I32	ro	No	ALL	No

・Alarm information of alarm main numbers 0 to 31 is displayed.

bit7	6	5	4	3	2	1	0
Err7.*	Err6.*	Err5.*	Err4.*	Err3.*	Err2.*	Err1.*	Err0.*

bit15	14	13	12	11	10	9	8
Err15.*	Err14.*	Err13.*	Err12.*	Err11.*	Err10.*	Err9.*	Err8.*

bit23	22	21	20	19	18	17	16
Err23.*	Err22.*	Err21.*	Err20.*	Err19.*	Err18.*	Err17.*	Err16.*

bit31	30	29	28	27	26	25	24
Err31.*	Err30.*	Err29.*	Err28.*	Err27.*	Err26.*	Err25.*	Err24.*

	02h	Multiple alarm information 2	-	-2147483648 - 2147483647	I32	ro	No	ALL	No

・Alarm information of alarm main numbers 32 to 63 is displayed.

bit7	6	5	4	3	2	1	0
Err39.*	Err38.*	Err37.*	Err36.*	Err35.*	Err34.*	Err33.*	Err32.*

bit15	14	13	12	11	10	9	8
Err47.*	Err46.*	Err45.*	Err44.*	Err43.*	Err42.*	Err41.*	Err40.*

bit23	22	21	20	19	18	17	16
Err55.*	Err54.*	Err53.*	Err52.*	Err51.*	Err50.*	Err49.*	Err48.*

bit31	30	29	28	27	26	25	24
Err63.*	Err62.*	Err61.*	Err60.*	Err59.*	Err58.*	Err57.*	Err56.*

Index	Sub-Index	Name / Description	Units	Range	Data Type	Access	PDO	Op-mode	EEPROM
4F37h	03h	Multiple alarm information 3	-	-2147483648 - 2147483647	I32	ro	No	ALL	No

・Alarm information of alarm main numbers 64 to 95 is displayed.

bit7	6	5	4	3	2	1	0
Err71.*	Err70.*	Err69.*	Err68.*	Err67.*	Err66.*	Err65.*	Err64.*

bit15	14	13	12	11	10	9	8
Err79.*	Err78.*	Err77.*	Err76.*	Err75.*	Err74.*	Err73.*	Err72.*

bit23	22	21	20	19	18	17	16
Err87.*	Err86.*	Err85.*	Err84.*	Err83.*	Err82.*	Err81.*	Err80.*

bit31	30	29	28	27	26	25	24
Err95.*	Err94.*	Err93.*	Err92.*	Err91.*	Err90.*	Err89.*	Err88.*

	04h	Multiple alarm information 4	-	-2147483648 - 2147483647	I32	ro	No	ALL	No

・Alarm information of alarm main numbers 96 to 127 is displayed.

bit7	6	5	4	3	2	1	0
Err103.*	Err102.*	Err101.*	Err100.*	Err99.*	Err98.*	Err97.*	Err96.*

bit15	14	13	12	11	10	9	8
Err111.*	Err110.*	Err109.*	Err108.*	Err107.*	Err106.*	Err105.*	Err104.*

bit23	22	21	20	19	18	17	16
Err119.*	Err118.*	Err117.*	Err116.*	Err115.*	Err114.*	Err113.*	Err112.*

bit31	30	29	28	27	26	25	24
Err127.*	Err126.*	Err125.*	Err124.*	Err123.*	Err122.*	Err121.*	Err120.*

	10h	Multiple sub alarm information	-	-2147483648 - 2147483647	I32	ro	No	ALL	No

・Alarm information of the sub number of the set alarm main number set with 4310h (Alarm main no).

bit7	6	5	4	3	2	1	0
Err*.7	Err*.6	Err*.5	Err*.4	Err*.3	Err*.2	Err*.1	Err*.0

bit15	14	13	12	11	10	9	8
Err*.15	Err*.14	Err*.13	Err*.12	Err*.11	Err*.10	Err*.9	Err*.8

bit23	22	21	20	19	18	17	16
Err*.23	Err*.22	Err*.21	Err*.20	Err*.19	Err*.18	Err*.17	Err*.16

bit31	30	29	28	27	26	25	24
Err*.31	Err*.30	Err*.29	Err*.28	Err*.27	Err*.26	Err*.25	Err*.24

Index	Sub-Index	Name / Description	Units	Range	Data Type	Access	PDO	Op-mode	EEPROM
4F37h	11h	Multiple warning information 1	-	-2147483648 - 2147483647	I32	ro	No	ALL	No

・Warning information of warning codes A0h to BFh is displayed.

bit7	6	5	4	3	2	1	0
WngA7h	WngA6h	WngA5h	WngA4h	WngA3h	WngA2h	WngA1h	WngA0h

bit15	14	13	12	11	10	9	8
WngAFh	WngAEh	WngADh	WngACh	WngABh	WngAAh	WngA9h	WngA8h

bit23	22	21	20	19	18	17	16
WngB7h	WngB6h	WngB5h	WngB4h	WngB3h	WngB2h	WngB1h	WngB0h

bit31	30	29	28	27	26	25	24
WngBFh	WngBEh	WngBDh	WngBCh	WngBBh	WngBAh	WngB9h	WngB8h

	12h	Multiple warning information 2	-	-2147483648 - 2147483647	I32	ro	No	ALL	No

・Warning information of warning codes C0h to DFh is displayed.

bit7	6	5	4	3	2	1	0
WngC7h	WngC6h	WngC5h	WngC4h	WngC3h	WngC2h	WngC1h	WngC0h

bit15	14	13	12	11	10	9	8
WngCFh	WngCEh	WngCDh	WngCCh	WngCBh	WngCAh	WngC9h	WngC8h

bit23	22	21	20	19	18	17	16
WngD7h	WngD6h	WngD5h	WngD4h	WngD3h	WngD2h	WngD1h	WngD0h

bit31	30	29	28	27	26	25	24
WngDFh	WngDEh	WngDDh	WngDCh	WngDBh	WngDAh	WngD9h	WngD8h

* The procedure for reading alarm information of 4F37h is shown below.

(example)When reading alarm information with Err26.1 and Err38.0 occurring in multiple.

1) Alarm information of alarm main numbers 0 to 31 is acquired from 4F37h-01h.
   When Err26.1 occurs, 1 is returned to bit 26.
2) Alarm information of alarm main numbers 32 to 63 is acquired from 4F37h-02h.
   When Err38.0 occurs, 1 is returned to bit 6.
3) Alarm information of alarm main numbers 64 to 95 is acquired from 4F37h-03h.
   It returns 0 because the corresponding alarm has not occurred.
4) Alarm information of alarm main numbers 96 to 127 is acquired from 4F37h-04h.
   It returns 0 because the corresponding alarm has not occurred.

Next, the alarm sub number is acquired for the alarm main number where the alarm is generated.

5) Set 26 to 4310h(Alaram main no) and obtain the alarm sub number of alarm main number 26 from 4F37h-10h.
   When Err26.1 occurs, 1 is returned to bit 1.
6) Set 38 to 4310h(Alaram main no) and obtain the alarm sub number of alarm main number 38 from 4F37h-10h.
   When Err38.0 occurs, 1 is returned to bit 0.

Index	Sub-Index	Name / Description	Units	Range	Data Type	Access	PDO	Op-mode	EEPROM
4F41h	-	Motor encoder data	-	-	-	-	-	-	-
		・Position information is displayed.							
	00h	Number of entries	-	2	U8	ro	No	ALL	No
		・The number of Sub-Index of 4F41h (Motor encoder data) is displayed.							
	01h	Mechanical angle (Single-turn data)	pulse	-2147483648 - 2147483647	I32	ro	TxPDO *1)	ALL	No
		・Motor mechanical angle (encoder single-turn data) is displayed. (Note) The first edition of the software version (Ver1.01) does not support TxPDO.							
	02h	Multi-turn data	rotation	-2147483648 - 2147483647	I32	ro	TxPDO *1)	ALL	No
		・Multi-turn data of the absolute encoder is displayed. (Note) The first edition of the software version (Ver1.01) does not support TxPDO.							
4F42h	00h	Electrical angle	0.0879°	-2147483648 - 2147483647	I32	ro	No	ALL	No
		・The electrical angle of the motor is displayed.							
4F44h	00h	Encoder status	-	-2147483648 - 2147483647	I32	ro	No	ALL	No
		・Status of encoder is displayed.							
4F48h	00h	External scale pulse total	pulse (external scale)	-2147483648 – 2147483647	I32	ro	TxPDO	ALL	No
		・Sum of external scale pulse counts is displayed.							
4F49h	00h	External scale absolute position	pulse (external scale)	-2147483648 – 2147483647	I32	ro	TxPDO	ALL	No
		・Absolute position of the external scale is displayed.							
4F4Ah	00h	External scale position deviation	pulse (external scale)	-2147483648 – 2147483647	I32	ro	TxPDO	pp hm csp	No
		・Full close deviation is displayed. (Note) The first edition of the software version (Ver1.01) does not support this.							
4F61h	00h	Power on cumulative time	30 minutes	-2147483648 - 2147483647	I32	ro	No	ALL	No
		・Cumulative on-time of control power to the servo driver is displayed.							
4F62h	00h	Temperature of amplifier	°C	-2147483648 – 2147483647	I32	ro	No	ALL	No
		・Temperature inside the servo driver is displayed.							
4F63h	00h	Temperature of encoder	°C	-2147483648 – 2147483647	I32	ro	No	ALL	No
		・Encoder inside the encoder is displayed. *Applicable only to 23-bit encoder: 0 for unsupported encoder.							

*1) The first edition of the software version (Ver1.01) does not support TxPDO of 4F41h-01h and 4F41h-02h.

Index	Sub-Index	Name / Description	Units	Range	Data Type	Access	PDO	Op-mode	EEPROM
4F64h	00h	Inrush resistance relay operating count	times	-2147483648 – 2147483647	I32	ro	No	ALL	No
		・Number of inrush current resistance relay operations is displayed. *1) *Saturation will occur at maximum value of 40000000h.							
4F65h	00h	Dynamic brake operating count	times	-2147483648 - 2147483647	I32	ro	No	ALL	No
		・Number of dynamic brake relay operations is displayed. *1) *Saturation will occur at maximum value of 40000000h.							
4F66h	00h	Fan operating time	30 minutes	-2147483648 - 2147483647	I32	ro	No	ALL	No
		・Operating time of the cooling fan is displayed. *1) *2)							
4F67h	00h	Fan life expectancy	0.1%	-2147483648 - 2147483647	I32	ro	No	ALL	No
		・Cumulative value of cooling fan life is displayed. *1) *2)							
4F68h	00h	Capacitor life expectancy	0.1%	-2147483648 - 2147483647	I32	ro	No	ALL	No
		・The ratio when the life of the main power condenser is set to 100%. *1)							
4F6Ch	00h	Motor power consumption	W	-2147483648 - 2147483647	I32	ro	No	ALL	No
		・Motor power consumption is displayed.							
4F6Dh	00h	Amount of motor power consumption	Wh	-2147483648 - 2147483647	I32	ro	No	ALL	No
		・Motor power consumption amount is displayed.							
4F6Eh	00h	Cumulative value of motor power consumption	Wh	-2147483648 - 2147483647	I32	ro	No	ALL	No
		・Cumulative value of motor power consumption is displayed. *1) *Saturation will occur at maximum value of 2147483647.							
4F77h	00h	Lost link error count	times	0 - 65535	U16	ro	No	ALL	No
		・Cumulative number of lost links is displayed.							
4F78h	00h	Synchronization signal error count	times	0 - 65535	U16	ro	No	ALL	No
		・Number of missing sync or IRQ is displayed.							
4F81h	00h	Encoder communication error count (accumulated)	times	-2147483648 - 2147483647	I32	ro	No	ALL	No
		・Number of cumulative number of occurrences of encoder communication errors is displayed. *Saturation will occur at maximum value of FFFh. Cleared by reboot of servo driver or reset of control power supply.							
4F83h	00h	External scale communication error count (accumulated)	times	0 – 65535	U16	ro	TxPDO	ALL	No
		・Number of cumulative number of occurrences of external communication errors is displayed. *Saturation will occur at maximum value of FFFh. Cleared by reboot of servo driver or reset of control power supply.							
4F84h	00h	External scale communication data error count (accumulated)	times	0 – 65535	U16	ro	TxPDO	ALL	No
		・Number of cumulative number of occurrences of external communication data errors is displayed. *Saturation will occur at maximum value of FFFh. Cleared by reboot of servo driver or reset of control power supply.							
4F86h	00h	Hybrid deviation	command	-2147483648 – 2147483647	I32	ro	TxPDO	pp hm csp	No
		・Hybrid deviation is displayed. (Note) The first edition of the software version (Ver1.01) does not support this.							
4F87h	00h	External scale data (Higher)	pulse (external scale)	-2147483648 – 2147483647	I32	ro	TxPDO	ALL	No
		・Higher 24 bits of external scale data is displayed.							
4F88h	00h	External scale data (Lower)	pulse (external scale)	-2147483648 – 2147483647	I32	ro	TxPDO	ALL	No
		・Lower 24 bits of external scale data is displayed.							
4F89h	00h	External scale status	-	0 – 65535	U16	ro	TxPDO	ALL	No
		・Status of the external scale ID is displayed.							
4F8Ah	00h	External scale Z phase counter	-	0 – 65535	U16	ro	No	ALL	No
		・When incremental external scale is used in full-closed control or in semi-closed control with the external scale position information monitor function enabled, the Z-phase counter value read from the external scale is displayed as 0 to F [hex]. (Note) The first edition of the software version (Ver1.01) does not support this.							

*1) It is recorded every 30 minutes.
It will be truncated from the integrated value if power supply is cut off before 30 minutes elapse.
*2) It becomes 0 when the fan is not installed.

Index	Sub-Index	Name / Description	Units	Range	Data Type	Access	PDO	Op-mode	EEPROM
4FA1h	00h	Velocity command value	r/min	-2147483648 - 2147483647	I32	ro	TxPDO	ALL	No
		・Velocity control command is displayed.							
4FA5h	00h	Velocity internal position command	r/min	-2147483648 - 2147483647	I32	ro	TxPDO	pp hm csp	No
		・Internal position command velocity is displayed.							
4FA6h	00h	Velocity error actual value	r/min	-2147483648 - 2147483647	I32	ro	TxPDO	pp hm csp	No
		・Speed deviation is displayed. 0 is displayed under full-closed control.							
4FA7h	00h	External scale position (Applied polarity)	pulse (external scale)	-2147483648 - 2147483647	I32	ro	TxPDO	ALL	No
		・The external scale position (Polarity applied) is displayed. (Note) The first edition of the software version (Ver1.01) does not support this.							
4FA8h	00h	Positive direction torque limit value	0.05%	-2147483648 - 2147483647	I32	ro	TxPDO	ALL	No
		・Positive direction torque limit value is displayed.							
4FA9h	00h	Negative direction torque limit value	0.05%	-2147483648 - 2147483647	I32	ro	TxPDO	ALL	No
		・Negative direction torque limit value is displayed.							
4FABh	00h	Gain switching flag	-	-2147483648 - 2147483647	I32	ro	TxPDO	ALL	No
		・Gain switching flag is displayed. 0: First gain sectionz 1: Second gain section 3: Third gain section							
4FB1h	00h	Deterioration diagnosis state	-	-2147483648 - 2147483647	I32	ro	No	ALL	No
		・Deterioration diagnosis status is displayed. bit0：Deterioration diagnosis warning is enabled bit1：Least square estimation enabled bit2：Least square estimation conversion is completed bit3： Deterioration diagnosis warning factor (inertia ratio) bit4：Deterioration diagnosis warning factor (offset load) bit5： Deterioration diagnosis warning factor (dynamic friction) bit6： Deterioration diagnosis warning factor (viscous friction)							
4FB2h	00h	Deterioration diagnosis torque command average value	0.1%	-2147483648 - 2147483647	I32	ro	No	ALL	No
		・Deterioration diagnosis torque command average value is displayed.							
4FB3h	00h	Deterioration diagnosis torque command standard value	0.1%	-2147483648 - 2147483647	I32	ro	No	ALL	No
		・Deterioration diagnosis torque command standard deviation is displayed.							
4FB4h	00h	Deterioration diagnosis inertia ratio estimate value	%	-2147483648 - 2147483647	I32	ro	No	ALL	No
		・Deterioration diagnosis inertia ratio is displayed.							
4FB5h	00h	Deterioration diagnosis offset load estimate value	0.1%	-2147483648 - 2147483647	I32	ro	No	ALL	No
		・Deterioration diagnosis offset load estimate value is displayed.							
4FB6h	00h	Deterioration diagnosis dynamic friction estimate value	0.1%	-2147483648 - 2147483647	I32	ro	No	ALL	No
		・Deterioration diagnosis dynamic friction estimate is displayed.							
4FB7h	00h	Deterioration diagnosis viscous friction estimate value	0.1%/ (10000r/min)	-2147483648 - 2147483647	I32	ro	No	ALL	No
		・Deterioration diagnosis viscous friction estimate is displayed.							

7 Servo Parameter Area (3000h to 3FFFh)

7-1 Object Overview

The 3000hs objects are allocated to the servo parameters.
(Excluding Class 15)
For more information on the servo parameters, refer to Specification for basic functions (SX-DSV03241).
The correspondence between the servo parameter numbers and object numbers is as follows:

■If the servo parameter number is less than 100:

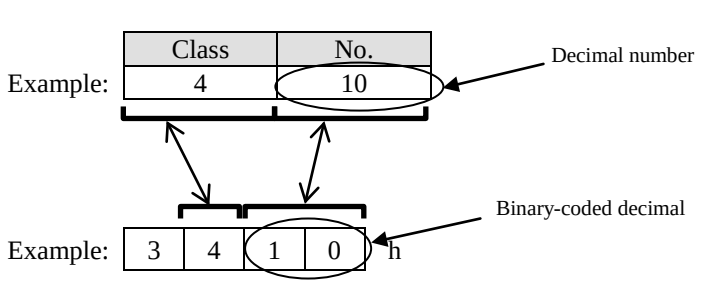

■If the servo parameter number is 100 or more:

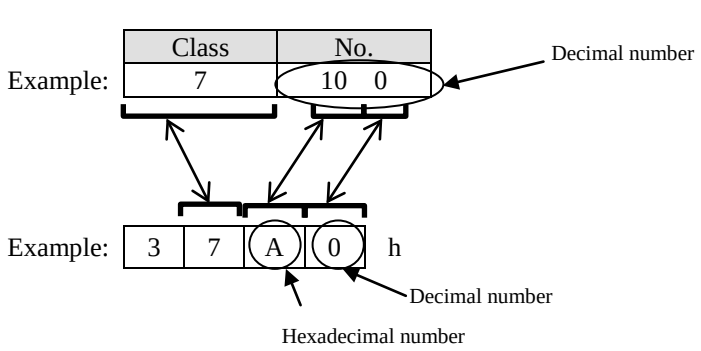

8 EtherCAT Relevant Protection Functions

8-1 Error (alarm) List (attribute and LED display)

The table below lists the LED display and alarm attribute when an error (alarm) occurs:

1) EtherCAT communication-related error(alarm)

Err No		Alarm name	Clearable	Emergency stop *1)	History *2)	ERR Indicator display	ESCregister AL Status Code
Main	Sub						
80	0	ESM unauthorized request error protection	Yes	Yes	Yes	Blinking	0011h
	1	ESM undefined request error protection	Yes	Yes	Yes	Blinking	0012h
	2	Bootstrap requests error protection	Yes	No	Yes	Blinking	0013h
	3	Incomplete PLL error protection	Yes	No	Yes	Single flash	002Dh
	4	PDO watchdog error protection	Yes	Yes	Yes	Double flash	001Bh
	6	PLL error protection	Yes	Yes	Yes	Single flash	0032h
	7	Synchronization signal error protection	Yes	Yes	Yes	Single flash	002Ch
81	0	Synchronization cycle error protection	Yes	No	Yes	Blinking	0035h
	1	Mailbox error protection	Yes	No	Yes	Blinking	0016h
	4	PDO watchdog error protection	Yes	No	Yes	Blinking	001Fh
	5	DC error protection	Yes	No	Yes	Blinking	0030h
	6	SM event mode error protection	Yes	No	Yes	Blinking	0028h
	7	SyncManager2/3 error protection	Yes	No	Yes	Blinking	001Dh 001Eh
85	0	TxPDO assignment error protection	Yes	No	Yes	Blinking	0024h
	1	RxPDO assignment error protection	Yes	No	Yes	Blinking	0025h
	2	Lost link error protection	Yes	Yes	Yes	Double flash	0000h
	3	SII EEPROM error protection	No	No	Yes	Flickering	0051h
88	0	Main power undervoltage protection (AC insulation detection 2)	Yes	Yes	No	OFF	0000h
	1	Control mode setting error protection	Yes	Yes	Yes	OFF	0000h
	2	ESM requirements during operation error protection	Yes	Yes	Yes	OFF	0000h
	3	Improper operation error protection	No	Yes	Yes	OFF	0000h

2) Error unrelated to EtherCAT communication(alarm)

Err No		Alarm name	Clearable	Emergency stop *1)	History *2)	ERR Indicator display	ESCregister AL Status Code
Main	Sub						
11	0	Control power supply undervoltage protection	Yes	No	No	OFF	0000h
12	0	Over-voltage protection	Yes	No	Yes	OFF	0000h
13	0	Main power supply undervoltage protection (between P to N)	Yes	Yes	No	OFF	0000h
	1	Main power supply undervoltage protection (AC interception detection)	Yes	Yes	No	OFF	0000h
14	0	Over-current protection	No	No	Yes	OFF	0000h
	1	IPM error protection	No	No	Yes	OFF	0000h
15	0	Over-heat protection	No	Yes	Yes	OFF	0000h
	1	Encoder over-heat protection	No	Yes	Yes	OFF	0000h
16	0	Over-load protection	Yes *3)	No	Yes	OFF	0000h
	1	Torque saturation error protection	Yes	No	Yes	OFF	0000h
18	0	Over-regeneration load protection	No	Yes	Yes	OFF	0000h
	1	Regenerative transistor error protection	No	No	Yes	OFF	0000h
21	0	Encoder communication disconnect error protection	No	No	Yes	OFF	0000h
	1	Encoder communication error protection	No	No	Yes	OFF	0000h
23	0	Encoder communication data error protection	No	No	Yes	OFF	0000h
24	0	Position deviation excess protection	Yes	Yes	Yes	OFF	0000h
	1	Speed deviation excess protection	Yes	Yes	Yes	OFF	0000h
25	0	Hybrid deviation excess error protection (Not supported)	No	Yes	Yes	OFF	0000h
26	0	Over-speed protection	Yes	Yes	Yes	OFF	0000h
	1	2nd over-speed protection	Yes	No	Yes	OFF	0000h
27	1	Absolute clear protection	No	No	Yes	OFF	0000h
	4	Position command error protection	Yes *5)	Yes	Yes	OFF	0000h
	6	Operation command contention protection	Yes	No	Yes	OFF	0000h
	7	Position information initialization error protection *6)	No	No	Yes	OFF	0000h
28	0	Pulse regeneration limit protection	Yes	Yes	Yes	OFF	0000h
29	1	Counter overflow protection 1	No	No	Yes	OFF	0000h
	2	Counter overflow protection 2	No	No	Yes	OFF	0000h
33	0	Duplicated input allocation error 1 protection	No	No	Yes	OFF	0000h
	1	Duplicated input allocation error 2 protection	No	No	Yes	OFF	0000h
	2	Input function number error 1 protection	No	No	Yes	OFF	0000h
	3	Input function number error 2 protection	No	No	Yes	OFF	0000h
	4	Output function number error 1 protection	No	No	Yes	OFF	0000h
	5	Output function number error 2 protection	No	No	Yes	OFF	0000h
	8	Latch input allocation error protection	No	No	Yes	OFF	0000h
34	0	Software limit protection	Yes	No	Yes	OFF	0000h
	1	One revolution absolute working range error	Yes	No	Yes	OFF	0000h
36	0-1	EEPROM parameter error protection	No	No	No	OFF	0000h
37	0-2	EEPROM check code error protection	No	No	No	OFF	0000h
38	0	Over-travel inhibit input protection 1	Yes	No	No	OFF	0000h
	1	Over-travel inhibit input protection 2	Yes	No	No	OFF	0000h
	2	Over-travel inhibit input protection 3	No	No	Yes	OFF	0000h
40	0	Absolute system down error protection	Yes *4)	No	Yes	OFF	0000h
41	0	Absolute counter over error protection	No	No	Yes	OFF	0000h
42	0	Absolute over-speed error protection	Yes *4)	No	Yes	OFF	0000h
44	0	Absolute single turn counter error protection	No	No	Yes	OFF	0000h
45	0	Absolute multi-turn counter error protection	No	No	Yes	OFF	0000h

Err No		Alarm name	Clearable	Emergency stop *1)	History *2)	ERR Indicator display	ESCregister AL Status Code
Main	Sub						
47	0	Absolute status error protection	No	No	Yes	OFF	0000h
50	0	External scale connection error protection	No	No	Yes	OFF	0000h
	1	External scale communication error protection	No	No	Yes	OFF	0000h
	2	External scale communication data error protection	No	No	Yes	OFF	0000h
51	0	External scale status error protection 0	No	No	Yes	OFF	0000h
	1	External scale status error protection 1	No	No	Yes	OFF	0000h
	2	External scale status error protection 2	No	No	Yes	OFF	0000h
	3	External scale status error protection 3	No	No	Yes	OFF	0000h
	4	External scale status error protection 4	No	No	Yes	OFF	0000h
	5	External scale status error protection 5	No	No	Yes	OFF	0000h
55	0	A-phase connection error protection	No	No	Yes	OFF	0000h
	1	B-phase connection error protection	No	No	Yes	OFF	0000h
	2	Z-phase connection error protection	No	No	Yes	OFF	0000h
70	0	U-phase current detector error protection	No	No	Yes	OFF	0000h
	1	W-phase current detector error protection	No	No	Yes	OFF	0000h
72	0	Thermal error protection	No	No	Yes	OFF	0000h
84	3	Synchronous establishment initialization error protection	No	No	Yes	OFF	0000h
87	0	Forced alarm input protection	Yes	Yes	No	OFF	0000h
	1	Retracting operation completion (I/O) *6)	*7)	Yes *8)	Yes	OFF	0000h
	2	Retracting operation completion (communication) *6)	*7)	Yes *8)	Yes	OFF	0000h
	3	Retracting operation error *6)	*7)	Yes *8)	Yes	OFF	0000h
91	1	Command error protection	Yes	No	Yes	OFF	0000h
92	0	Encoder data recovery error protection	No	No	Yes	OFF	0000h
	1	External scale data recovery error protection	No	No	Yes	OFF	0000h
	3	Multi-turn data upper-limit value disagreement error protection	No	No	Yes	OFF	0000h
93	2	Parameter setting error protection 2	No	No	Yes	OFF	0000h
	3	External scale connection error protection	No	No	Yes	OFF	0000h
	8	Parameter setting error protection 6	No	No	Yes	OFF	0000h
94	3	Home position return error protection 2	Yes	No	Yes	OFF	0000h
95	0-4	Motor automatic recognition error protection	No	No	No	OFF	0000h
96	2-8	Control unit error protection 1 to 7	No	No	Yes	OFF	0000h
98	2	Communication hardware error protection 2	No	No	Yes	OFF	0000h
	3	Communication hardware error protection 3	No	No	Yes	OFF	0000h
Other		Other error protection	-	-	-	OFF	0000h

*1): The emergency stop indicates the alarm that emergency stops the operation when 3510h (Sequence at alarm) is set to 4 - 7. For more information, refer to Specification for basic functions (SX-DSV03241).

*2): A "history" shows whether it leaves error(alarm) generating as a history at error(alarm) developmental time, or it does not leave.
The error(alarm) from which the "history" serves as Yes are saved as a generating history from Subindex06h -13h(Diagnosis message 1 - 14) of 10F3h(Diagnosis history) at developmental time.

*3): When Err16.0” Over-load protection” operates, after generating, it becomes clearable in about 10 seconds. It receives as an alarm clear command, and clear processing is started after being in a clearable state.

*4): When Err40.0” Absolute counter over error protection” and Err42.0” Absolute over-speed error protection” occur, an error clearance cannot be carried out until it performs an absolute clearance.

*5) In the first edition of the software version (Ver1.01), alarm clearance is unavailable.
In the enhanced software version 1 and later (Ver1.02 and later), alarm clearance is available.

*6) The first edition of the software version (Ver1.01) does not support it.

*7) Depending on the 3668h8 bit 0 to 2 settings, the properties of error clear vary.
bit 0: Err87.1 (Retracting operation completion (I/O)) alarm clear attribute
bit 1: Err87.2 (Retracting operation completion (communication) alarm clear attribute
bit 2: Err87.3 (Retracting operation error) alarm clear attribute
* Setting value:
0: Unable to clear alarm
1: Able to clear alarm

*8) It is an emergency stop alarm according to the attribute, but when the retracting operation activation condition is established, the operation does not conform to Pr5.10 “Sequence at alarm” but it is determined by the retracting operation function, and an alarm is generated after retracting operation completion.
For details of the retracting operation function, refer to section 6-9 in the Technical Reference Functional Specification (SX-DSV03241).
It behaves as the emergency stop alarm, for example, in a manner that the fall prevention function in alarms works after retracting operation completion.
For the fall prevention function in alarms, refer to section 6-3-6-1 in the Technical Reference Functional Specification (SX-DSV03241).

8-2 EtherCAT-related details of error(alarm)

Only EtherCAT communication-related error(alarm) are published in this chapter.
Please refer to the volume on Functional Specification (SX-DSV03241) for other alarms.

The AL Status Code and ESM status are updated to the latest error status related to the EtherCAT every time an EtherCAT related error is detected.
For the display of PANATERM or 7-segment LED and Abort messages, the Err number detected first is displayed and maintained until the alarm is cleared.

1) Inaccurate ESM demand error protection (Err80.0)

Primary factor	The change state demand which cannot change from the present state was received. Init to SafeOP Init to OP PreOP to OP OP to Bootstrap PreOP to Bootstrap SafeOP to Bootstrap
ESM state to detect	All the ESM states
Synchronous mode to detect	DC, FreeRun, SM2
ESM state after detection	- When the present state is Init, PreOP, or SafeOP: It remains in the present ESM state. - When the present state is OP: SafeOP
ESC register AL Status Code	0011h
Disposition	Check the change state request of host controller.
Alarm clear attribute	Clearance is possible.
Display of ERR Indicator	Blinking

2) ESM undefined request error protection (Err80.1)

Primary factor	The change state request which does not have a definition (except the following) was received. 1 : Request Init State 2 : Request Pre-Operational State 3 : Request Bootstrap State 4 : Request Safe-Operational State 8 : Request Operational State
ESM state to detect	All the ESM states
Synchronous mode to detect	DC, FreeRun, SM2
ESM state after detection	- When the present state is Init, PreOP, or SafeOP: It remains in the present ESM state. - When the present state is OP: SafeOP
ESC register AL Status Code	0012h
Disposition	Check the change state request of host controller.
Alarm clear attribute	Clearance is possible.
Display of ERR Indicator	Blinking

3) Bootstrap requests error protection (Err80.2)

Primary factor	The following change state request was received. 3 : Request Bootstrap State
ESM state to detect	form Init to Bootstrap
Synchronous mode to detect	DC, FreeRun, SM2
ESM state after detection	Init
ESC register AL Status Code	0013h
Disposition	Check the change state request of host controller.
Alarm clear attribute	Clearance is possible.
Display of ERR Indicator	Blinking

4) Incomplete PLL error protection (Err80.3)

Primary factor	Phasing servo and communication(PLL lock) could not be completed even after the lapse of 1s after the start of the synchronization process. Refer to Appendix 1.
ESM state to detect	from PreOP to SafeOP
Synchronous mode to detect	DC, SM2
ESM state after detection	PreOP
ESC register AL Status Code	002Dh
Disposition	<In case of DC> - Check setting of DC mode. - Check whether propagation delay compensation or drift compensation is correct. <In case of SM2> - Check whether the transmitting timing of PDO from host controller is constant. - Check whether there is any problem in wiring of an EtherCAT communication cable. - Check whether the excessive noise has started the EtherCAT communication cable.
Alarm clear attribute	Clearance is possible.
Display of ERR Indicator	Single flash

5) PDO watchdog error protection (Err80.4)

Primary factor	Bit10 of AL Event Request(0220h) did not turn on within the time set by the ESC register addresses 0400h and 0420h during PDO communication (SafeOP or OP). Refer to Appendix 1.
ESM state to detect	SafeOP*1), OP
Synchronous mode to detect	DC, FreeRun, SM2
ESM state after detection	SafeOP
ESC register AL Status Code	001Bh
Disposition	- Check whether the transmitting timing of PDO from host controller is constant(not stop). - Increase the timeout value of the PDO watchdog detection. - Check whether there is any problem in wiring of an EtherCAT telecommunication cable. - Check whether the excessive noise has started the EtherCAT communication cable.
Alarm clear attribute	Clearance is possible.
Display of ERR Indicator	Double flash

*1) For this servo driver, the watchdog at SM3 (TxPDO) is disabled, and only the watchdog at SM2 (RxPDO) is detected. Hence, the alarm is detected only in the OP state.

6) PLL error protection (Err80.6)

Primary factor	Phasing servo and communication(PLL lock) separated during operation in the state of SafeOP or OP. Refer to Appendix 1.
ESM state to detect	SafeOP, OP
Synchronous mode to detect	DC, SM2
ESM state after detection	SafeOP
ESC register AL Status Code	0032h
Disposition	<In case of DC> - Check setting of DC mode. - Check whether propagation delay compensation or drift compensation is correct. <In case of SM2> - Check whether the transmitting timing of PDO from host controller is constant. - Check whether there is any problem in wiring of an EtherCAT communication cable. - Check whether the excessive noise has started the EtherCAT communication cable. * If the error cannot be resolved, shut off and reset the control power.
Alarm clear attribute	Clearance is possible.
Display of ERR Indicator	Single flash

7) Synchronization signal error protection (Err80.7)

Primary factor	More than the threshold value that the omission of the interruption processing by SYNC0 or IRQ set up by bit0-3 of 3742h(Maximum continuation communication error) in after the completion of synchronous processing generated. Refer to Appendix 1.
ESM state to detect	SafeOP, OP
Synchronous mode to detect	DC, SM2
ESM state after detection	SafeOP
ESC register AL Status Code	002Ch
Disposition	<In case of DC> - Check setting of DC mode. - Check whether propagation delay compensation or drift compensation is correct. <In case of SM2> - Check whether the transmitting timing of PDO from host controller is constant. - Check whether there is any problem in wiring of an EtherCAT communication cable. - Check whether the excessive noise has started the EtherCAT communication cable. - The preset value of 3742h(Maximum continuation communication error) bit0-3 is enlarged. * If the error cannot be resolved, shut off and reset the control power.
Alarm clear attribute	Clearance is possible.
Display of ERR Indicator	Single flash

(Appendix 1.) About the generating conditions of Err80.3 to Err80.7

The example in DC synchronous is shown in the following figure.

(In a case SM2 synchronous, SYNC0 signal replaces an IRQ signal.)

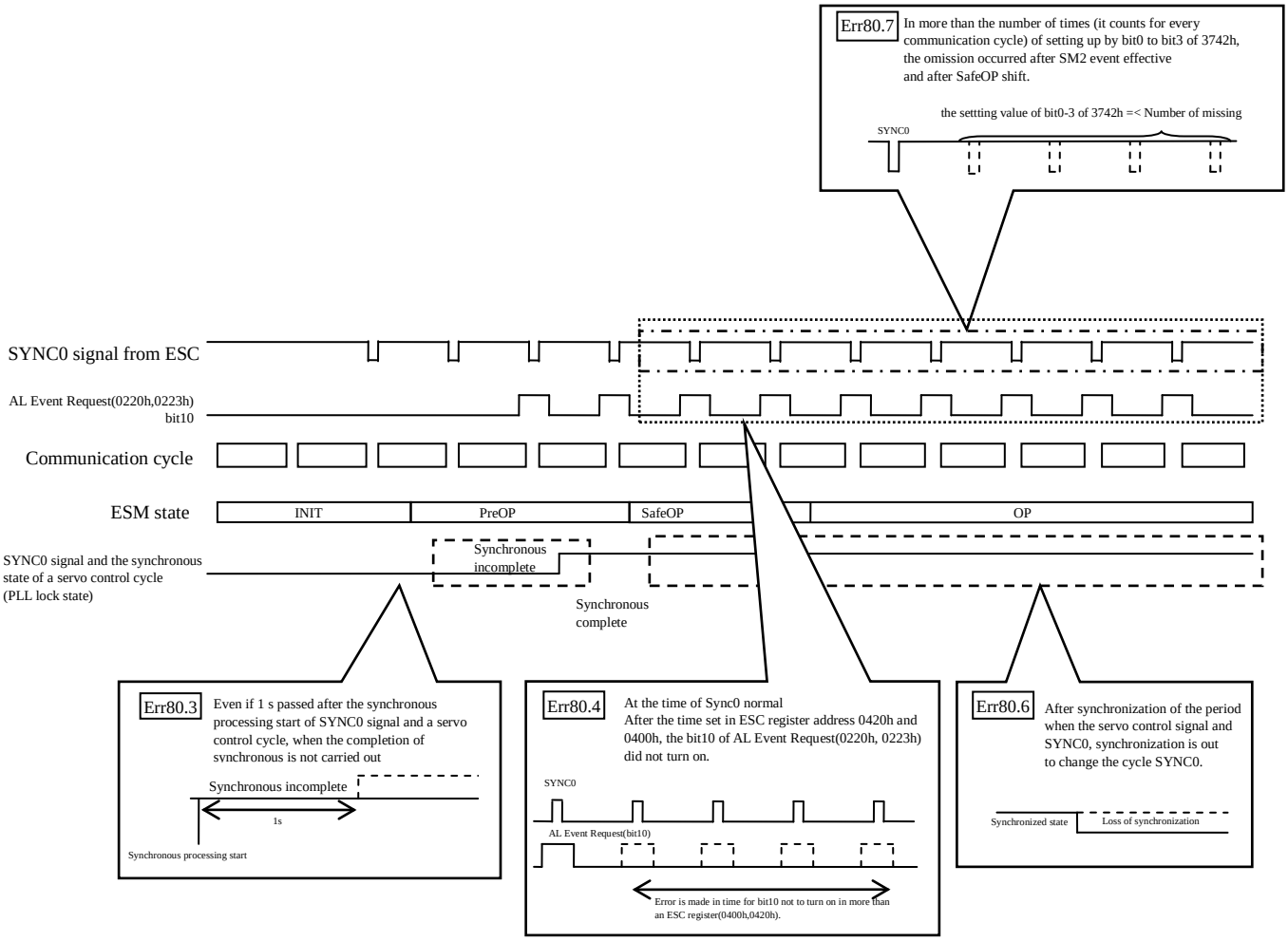

- Related objects

Index	Sub-Index	Name / Description	Units	Range	Data Type	Access	PDO	Op-mode	EEPROM
3742h	00h	Maximum continuation communication error • Set an upper limit on the number of consecutive occurrences communication error. bit 0 to 3 : Detection threshold of Err 80.7 (0 to 15 times. When 0 is set, the detection of Err80.7 is disabled.) bit 4 to 7 : Reserved bit 8 to 11 : Reserved bit 12 to 15 : Reserved	—	-32768 - 32767	I16	rw	No	ALL	Yes

8) Synchronization cycle error protection (Err81.0)

Primary factor	If set to cycle synchronization(SYNC0 cycle) is not supported. - It sets except 125000, 250000, 500000, 1000000, 2000000, and 4000000 [ns] to ESC register SYNC0 Cycle Time (09A0h) or object 1C32h:sub 02h (Cycle time). - The set value of an ESC register and an object are not matched.
ESM state to detect	from PreOP to SafeOP
Synchronous mode to detect	DC
ESM state after detection	PreOP
ESC register AL Status Code	0035h
Disposition	Set up a synchronous period correctly.
Alarm clear attribute	Clearance is possible.
Display of ERR Indicator	Blinking

Primary factor	If set to cycle synchronization(IRQ cycle) is not supported. - It sets except 125000,250000, 500000, 1000000, 2000000, and 4000000 [ns] to object 1C32h:sub 02h (Cycle time).
ESM state to detect	from PreOP to SafeOP
Synchronous mode to detect	SM2
ESM state after detection	PreOP
ESC register AL Status Code	0035h
Disposition	Set up a synchronous period correctly.
Alarm clear attribute	Clearance is possible.
Display of ERR Indicator	Blinking

9) Mailbox error protection (Err81.1)

Primary factor	SM setup of Mailbox is wrong. A setup of SM0/1 was set as the unjust value. - A Physical Start Address:ESC register (0800h, 0801h/0808h,0809h) setup of SyncManager0/1 is inaccurate. - The area for reception of Mailbox overlaps the area for transmission. - The area for transmission/reception of Mailbox overlaps the area for transmission/reception of SyncManager2/3 - Address specification of the area for transmission/reception of Mailbox is odd number. - A Length:ESC register (0802h,0803h/080Ah, 080Bh) setup of SyncManager0/1 is inaccurate. - Out of range of SyncManager0: Blow 32byte - Out of range of SyncManager1: Blow 32byte - A Control Register:ESC register (0804h/080Ch) setup of SyncManager0/1 is inaccurate. - Set code other than 0110b in 0804h:bit3-0 - Set code other than 0010b in 080Ch:bit3-0
ESM state to detect	from Init to PreOP,PreOP,SafeOP,OP
Synchronous mode to detect	DC, FreeRun, SM2
ESM state after detection	Init
ESC register AL Status Code	0016h
Disposition	Set the Sync manager correctly in accordance with the ESI file descriptions.
Alarm clear attribute	Clearance is possible.
Display of ERR Indicator	Blinking

10) PDO watchdog error protection (Err81.4)

Primary factor	A setup of the watchdog timer of PDO is wrong. <In case of DC, SM2 mode> Although PDO watch dog trigger is effective (SyncManager: Bit6 which is the register 0804h set to 1), when the detection timeout value of PDO watchdog timer cycle setup (registers 0400h and 0420h) was less than "communication cycle x2". <In case of FreeRun mode> Although PDO watch dog trigger is effective (SyncManager: Bit6 which is the register 0804h set to 1), when the detection timeout value of PDO watchdog timer cycle setup (registers 0400h and 0420h) was the following was set as less than 2 ms.
ESM state to detect	from PreOP to SafeOP
Synchronous mode to detect	DC, FreeRun, SM2
ESM state after detection	PreOP
ESC register AL Status Code	001Fh
Disposition	Set up detection timeout value of watchdog timer correctly.
Alarm clear attribute	Clearance is possible.
Display of ERR Indicator	Blinking

11) DC error protection (Err81.5)

Primary factor	DC setting is wrong. - A value other than the following was set to bit 2-0 of 0981h (Activation) of the ESC register: bit 2-0 = 000b bit 2-0 = 011b
ESM state to detect	from PreOP to SafeOP
Synchronous mode to detect	DC, FreeRun, SM2
ESM state after detection	PreOP
ESC register AL Status Code	0030h
Disposition	Check setting of DC mode.
Alarm clear attribute	Clearance is possible.
Display of ERR Indicator	Blinking

12) SM event mode error protection (Err81.6)

Primary factor	SM event mode which is not supported was set up. - A value other than 00h(FreeRun), 01h(SM2), and 02h(DC SYNC0) was set to 1C32h-01h(Sync mode). - A value other than 00h (FreeRun), 02h (DC SYNC0), or 22h (SM2) was set to 1C33h-01h (Sync mode). - When 000b was set to bit 2-0 of 0981h of the ESC register, SM2 setting was set to only either 1C32h-01h or 1C33h-01h.
ESM state to detect	from PreOP to SafeOP
Synchronous mode to detect	DC, FreeRun, SM2
ESM state after detection	PreOP
ESC register AL Status Code	0028h
Disposition	- 1C32h-01h(Sync mode) should set up 00h(FreeRun), 01h(SM2), or 02h(DC SYNC0). - 1C33h-01h(Sync mode) should set up 00h(FreeRun), 02h(DC SYNC0), or 22h (SM2). - Set same value to 1C32h-01h and 1C33h-01h.
Alarm clear attribute	Clearance is possible.
Display of ERR Indicator	Blinking

13) SyncManager2/3 error protection (Err81.7)

Primary factor	SyncManager2 was set as the unjust value. - A Physical Start Address (ESC register 0810h) setup of SyncManager2 is inaccurate. - Receiving area overlaps with the area for the transmission. - The area for transmission/reception of Mailbox overlaps the area for transmission/reception of SyncManager2/3 - Addressing transmission and reception area is an odd number. - Start addresses is out of range. - A Length (ESC register 0812h) setup of SyncManager2 is inaccurate. - Different from RxPDO size. - A Control Register (ESC register 0814h) setup of SyncManager2 is inaccurate. - Other than 01b is set to bit3-2.
ESM state to detect	from PreOP to SafeOP, SafeOP, OP
Synchronous mode to detect	DC, FreeRun, SM2
ESM state after detection	PreOP
ESC register AL Status Code	001Dh
Disposition	Set SyncManager2 correctly in accordance with the ESI file descriptions.
Alarm clear attribute	Clearance is possible.
Display of ERR Indicator	Blinking

Primary factor	A setup of SyncManager3 was set as the unjust value. - A Physical Start Address (ESC register 0818h) setup of SyncManager3 is inaccurate. - Receiving area overlaps with the area for the transmission. - The area for transmission/reception of Mailbox overlaps the area for transmission/reception of SyncManager2/3 - Addressing transmission and reception area is an odd number. - Start addresses is out of range. - A Length (ESC register 081Ah) setup of SyncManager3 is inaccurate. - Different from TxPDO size. - A Control Register (ESC register 081Ch) setup of SyncManager3 is inaccurate. - Other than 00b is set to bit3-2.
ESM state to detect	from PreOP to SafeOP, SafeOP, OP
Synchronous mode to detect	DC, FreeRun, SM2
ESM state after detection	PreOP
ESC register AL Status Code	001Eh
Disposition	Set SyncManager3 correctly in accordance with the ESI file descriptions.
Alarm clear attribute	Clearance is possible.
Display of ERR Indicator	Blinking

14) TxPDO assignment error protection (Err85.0)

Primary factor	The data size of TxPDO map is set up exceeding 32 bytes.
ESM state to detect	from PreOP to SafeOP
Synchronous mode to detect	DC, FreeRun, SM2
ESM state after detection	PreOP
ESC register AL Status Code	0024h
Disposition	TxPDO data size is set up within 32 bytes.
Alarm clear attribute	Clearance is possible.
Display of ERR Indicator	Blinking

15) RxPDO assignment error protection (Err85.1)

Primary factor	The data size of RxPDO map is set up exceeding 32 bytes.
ESM state to detect	from PreOP to SafeOP
Synchronous mode to detect	DC, FreeRun, SM2
ESM state after detection	PreOP
ESC register AL Status Code	0025h
Disposition	RxPDO data size is set up within 32 bytes.
Alarm clear attribute	Clearance is possible.
Display of ERR Indicator	Blinking

16) Lost link detection error protection (Err85.2)

Primary factor	The time set in 3743h (Lost link detection time) elapsed when either Port 0 or Port 1 fell and remains in the lost link state after the ESM state transitioned from Init to PreOP (not including a port that had been in the lost link state at the time of transition from Init to PreOP).
ESM state to detect	PreOP, SafeOP, OP
Synchronous mode to detect	DC, FreeRun, SM2
ESM state after detection	Init
ESC register AL Status Code	0000h
Disposition	- Check whether there is any problem in wiring of an EtherCAT communication cable. - Check whether there is any problem in the communication from host controller.
Alarm clear attribute	Clearance is possible.
Display of ERR Indicator	Double flash

• Related object

Index	Sub-Index	Name / Description	Units	Range	Data Type	Access	PDO	Op-mode	EEPROM
3743h	00h	Lost link detection time	ms	0 - 32767	I16	rw	No	ALL	Yes
		- When the time set in this parameter elapsed when either Port 0 or Port 1 fell and remains in the lost link state after the ESM state transitioned from Init to PreOP (not including a port that had been in the lost link state at the time of transition from Init to PreOP), Err85.2 (EtherCAT communication interception error) occurs. - When 0 is set, the detection of Err85.2 (Lost link detection error protection) is disabled.							

Note: This alarm is generated only by the slave that detected a lost link. A subsequent slave that has not detected a lost link does not detect this alarm.
To enable the detection of the alarm by a subsequent slave, assign PDO and enable the PDO watchdog.
Note that the default value of 3743h (Lost link detection time) is set to 0 (invalid).

17) SII EEPROM error protection (Err85.3)

Primary factor	- VendorID, Product code, or Revision number do not agree between SII (EEPROM) and the object values. - Reading out from and writing to SII (EEPROM) are improper. - If any of bit11 to14 of ESC register 0502h is set to 1.
ESM state to detect	All ESM states
Synchronous mode to detect	DC, FreeRun, SM2
ESM state after detection	Init
ESC register AL Status Code	0051h
Disposition	Check the data of SII. Retry reading out from and writing to SII.
Alarm clear attribute	Clearance is impossible.
Display of ERR Indicator	Flickering

18) Main power undervoltage protection (AC insulation detection 2) (Err88.0)

Primary factor	- Main circuit power supply OFF was detected when the preset value of 6007h (Abort connection option code) is 1 and the PDS state is “Operation Enabled” or “Quick stop active”. - Switch on command was received when the preset value of 6007h (Abort connection option code) is 1 and the PDS state is “Ready to switch on” and main circuit power supply OFF.
ESM state to detect	PreOP, SafeOP, OP
Synchronous mode to detect	DC, FreeRun, SM2
ESM state after detection	It remains in the present ESM state.
ESC register AL Status Code	0000h
Disposition	- The capacity rise of power supply voltage. A power supply is changed. The cause by which the magnetic contactor of the main power supply fell is removed, and a power supply is switched on again. - Each phase (L1, L2, L3) of a power supply is connected correctly. The single phase 100V and the single phase 200V should use L1 and L3. - It replaces with new servo driver.
Alarm clear attribute	Clearance is possible.
Display of ERR Indicator	OFF

19) Control mode setting error protection (Err88.1)

Primary factor	- The PDS state was changed to “Operation enabled” when the value set to 6060h (Modes of operation) is 0 and the value set to 6061h (Modes of operation display) is 0. - Unsupported control mode is set to 6060h (Modes of operation). - A control mode other than position control is set to 6060h (Modes of operation) in full-closed control. - 4 (tq) or 10 (cst) is set to 6060h (Modes of operation) while in 2 degrees freedom control mode (standard type). - 3 (pv), 4 (tq), 9(csv) or 10 (cst) is set to 6060h (Modes of operation) while in 2 degrees freedom control mode (Synchronization type). - Under full-closed control, the control mode was set to 2 degrees of freedom control mode (synchronization type).
ESM state to detect	All the ESM states
Synchronous mode to detect	DC, FreeRun, SM2
ESM state after detection	It remains in the present ESM state.
ESC register AL Status Code	0000h
Disposition	- Check preset value of 6060h(Modes of operation). - Check 2 degree of freedom control related parameter Pr 6.47 bit 0 and bit3 Since parameter shipping values are different from MINAS-A5B series, please be careful.
Alarm clear attribute	Clearance is possible.
Display of ERR Indicator	OFF

20) ESM requirements during operation error protection (Err88.2)

Primary factor	- When a PDS state was "Operation enabled" or "Quick stop active", the transition command to other ESM state was received. - When 3799h bit0=1 is set, the transition command from the current ESM state to other ESM state was received during servo-on (occurrence of warning D2) from PANATERM.
ESM state to detect	Init, PreOP, SafeOP, OP
Synchronous mode to detect	DC, FreeRun, SM2
ESM state after detection	A state transition request from host contoller is followed.
ESC register AL Status Code	0000h
Disposition	Check the state transition request from higher rank equipment.
Alarm clear attribute	Clearance is possible.
Display of ERR Indicator	OFF

21) Improper operation error protection (Err88.3)

Primary factor	- When EXT1/EXT2 is not assigned to input signal, EXT1/EXT2 was selected in trigger selection of a touch probe (60B8h (Touch probe function)). - When Z-phase is chosen by trigger selection of a touch probe (60B8h(Touch probe function)) at the time of absolute mode of full-closed. - When the software limit function is enabled, a wraparound occurred to the actual position or command position.
ESM state to detect	PreOP, SafeOP, OP
Synchronous mode to detect	DC, FreeRun, SM2
ESM state after detection	It remains in the present ESM state.
ESC register AL Status Code	0000h
Disposition	- Set up the functional allotment for input signal correctly. - Set up trigger selection correctly. - Check the relation between the operation range setting and the software limit setting.
Alarm clear attribute	Clearance is impossible.
Display of ERR Indicator	OFF

Primary factor	- The calculation result of electronic gear ratio fell outside the range of 8000 times to 1/1000 times. - In the calculation process of electronic gear ratio, the denominator or numerator exceeds an unsigned 64-bit size. - In the final calculation result of electronic gear ratio, the denominator or numerator exceeds an unsigned 32-bit size.
ESM state to detect	Init to PreOP
Synchronous mode to detect	DC, FreeRun, SM2
ESM state after detection	A state transition request from the master is followed.
ESC register AL Status Code	0000h
Disposition	Review the electronic gear settings and turn ON the control power again.
Alarm clear attribute	Clearance is impossible.
Display of ERR Indicator	OFF

8-3 Reading Error (alarm)

Error code is defined by IEC61800-7-201 until 0000h from FEFFh.
Error code can define peculiar until FF00h from FEFFh by manufacturer, is indicated by the following contents.

The lower 8 bits of the value (FF00h to FFFFh) defined indicates the main alarm number of the servo error (alarm), as listed in the table below.
(The sub alarm number cannot be read.)
Note that the main alarm number is hexadecimal.

Index	Sub-Index	Name / Description	Units	Range	Data Type	Access	PDO	Op-mode	EEPROM
603Fh	00h	Error code	-	0 - 65535	U16	ro	Yes	ALL	No

- Displays an alarm (main number only) / warning occurred in the servo driver.
  When both an alarm and warning does not occur, displays 0000h.
  When an alarm and warning occur at the same time, display the alarm.
  FF**h
  Alarm (main) number (00h to 9Fh)
  warning number(A0h to A9h, C3h, D2h etc.)

Example: FF0Ch: 0Ch=12d. Err12.0 (over voltage protection) occurred
FF55h: 55h=85d. Err85.0 (TxPDO assignment error protection)
or Err85.1 (RxPDO assignment error protection) occurred

(Note) As exception, when the exception of Err81.7(SyncManager2/3 error protection) occurs, display A000h.
(Note) The setting of the alarm number to 603Fh (Error code) is the same timing as the "Emergency Message". Therefore, the value is reflected later than bit3 (fault) of 6041h (Statusword).

8-4 Clear error (alarm)/Clear warning

How to reset the protection function in the context of EtherCAT error(alarm) can be cleared.

- Either method 1, 2, 3 below enable to recover from error (alarm).
  Also, for information on other than the EtherCAT relevant protection functions, refer to Chapter 7 in Technical document Basic function specifications (SX-DSV03241).

method 1

- Set the bit 4 (Error Ind Ack) to "1" in AL Control.
- After that, the controller sets the bit 7 of 6040h (Control word) from 0 to 1 (sends the Fault reset command) to complete the error (alarm) clear.
- After the error (alarm) clear is completed, the PDS state changes from Fault to Switch on disabled.

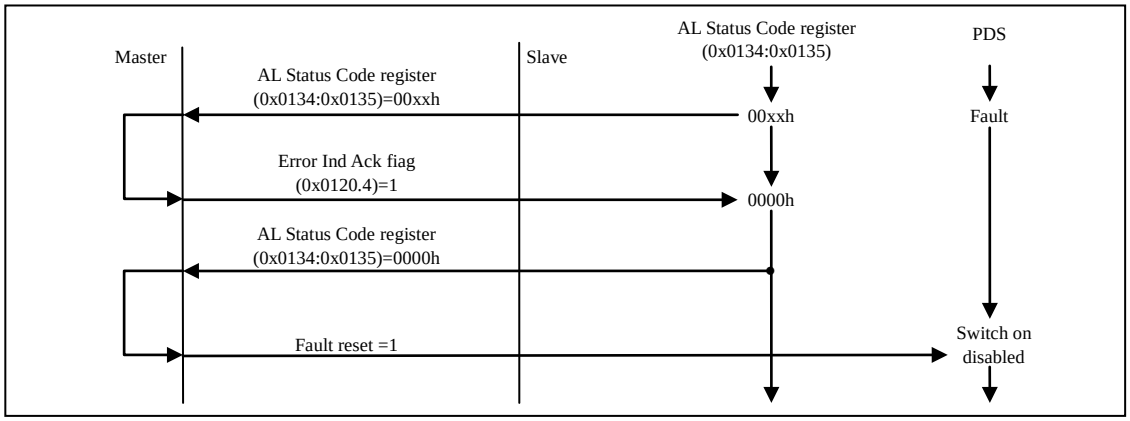

method 2

- Perform error (alarm) clear by PANATERM.
- After the error (alarm) clear is completed, the PDS state changes from Fault to Switch on disabled.

method 3

- Change the external alarm clear input (A-CLR) from OFF state to ON state.
- After the error (alarm) clear is completed, the PDS state changes from Fault to Switch on disabled.

(Note)

- There is a delay of time between the notice and error (alarm) or between the warning and notice in AL Status, so the notice is not synchronous
- The LED display (RUN, ERR), ESM state, and AL Status in the front panel are updated to the latest communication error status each time a communication error is detected. However, the Err number detected first time is displayed in the segment 7 LED and held until the Fault is reset.
  (The unclearable error (alarm) are kept even after the Fault is reset.)
- If the alarm is occurring at the same time more than one, may not be able to clear even the cause of the alarm has been released if not release the cause of all alarms.
- An alarm is not successfully cleared even when alarm clearance is executed from PANTERM or from EtherCAT (Fault reset command) with external alarm clear input (A-CLR) ON.
  In this case, turn OFF external alarm clear input (A-CLR) temporarily, send the Fault reset command, or execute alarm clearance from PANATERM.
- When the PDS status is Fault reaction active, the error (alarm) cannot be cleared.

- How to clear warning

  - When warning latch state is set to latch setting by 3627 h (Warning latch state setup), after generating warnings to be latched, the warning will not be cleared even if the cause is released. In this case, you can clear the warning that is currently occurring by setting the bit 7 of 6040h (Control word) from 0 to 1 (send the Fault reset command) via EtherCAT, by executing the error (alarm) clear from PANATERM or by switching the external alarm clear input (A - CLR) from OFF to ON. However, when the PDS status is Fault reaction active, the warning cannot be cleared.

  - When an external alarm clear input (A-CLR) is in ON state, warning does not occur.

8-5 Other, error(alarm) / warning ralated function

Function related error(alarm) and warning have been described in addition to this section, refer to the section below.

- Abort message … Section 3-6-1
- Emergency message … Section 3-6-1
- 1001h(Error register) … Section 3-6-1, 5-2
- 10F3h(Diagnosis history) … Section 3-6-1, 5-7
- 603Fh(Error code) … Section 3-6-1

9 Object Dictionary List

"Attribute" indicates the timing when the change of object value becomes effective.
A : Always effective
B : A change during a motor operation and command discharge is inhibited.
* The reflection timing in the case where it is changed during a motor operation and command discharge is indefinite.
C : Effective after reset control power or after pin assign setting from PANATERM
R : Effective after control power reset
P : Effective at time of transition from Init to PreOP
S : Effective at time of transition from PreOP to SafeOP
H : Effective after the position information determined
X : Object which cannot be changed such as read only or not-supported object

"PDO" indicates whether PDO mapping is possible or not.
*For details of PDO mapping, please refer to Chapter 5-4.
No : RxRDO and TxPDO mapping not supported. (only SDO is supported)
RxPDO : RxPDO mapping available
TxPDO : TxPDO mapping available

CoE communication profile area (1000h to 1FFFh)

Index	Sub-Index	Name	Units	Range	Data Type	Access	PDO	Op-mode	EEPROM	Attribute
1000h	00h	Device type	—	0 - 4294967295	U32	ro	No	ALL	No	X
1001h	00h	Error register	—	0 - 255	U8	ro	No	ALL	No	X
1008h	00h	Manufacturer device name	—	—	VS	ro	No	ALL	No	X
1009h	00h	Manufacturer hardware version	—	—	VS	ro	No	ALL	No	X
100Ah	00h	Manufacturer software version	—	—	VS	ro	No	ALL	No	X
1010h	-	Store parameters	—	—	—	—	—	—	—	—
	00h	Number of entries	—	0 - 255	U8	ro	No	ALL	No	X
	01h	Save all parameters	—	0 - 4294967295	U32	rw	No	ALL	No	A
1018h	-	Identity object	—	—	—	—	—	—	—	—
	00h	Number of entries	—	0 - 255	U8	ro	No	ALL	No	X
	01h	Vendor ID	—	0 - 4294967295	U32	ro	No	ALL	No	X
	02h	Product code	—	0 - 4294967295	U32	ro	No	ALL	No	X
	03h	Revision number	—	0 - 4294967295	U32	ro	No	ALL	No	X
	04h	Serial number	—	0 - 4294967295	U32	ro	No	ALL	No	X
10F3h	-	Diagnosis history	—	—	—	—	—	—	—	—
	00h	Number of entries	—	0 - 255	U8	ro	No	ALL	No	X
	01h	Maximum messages	—	0 - 255	U8	ro	No	ALL	No	X
	02h	Newest message	—	0 - 255	U8	ro	No	ALL	No	X
	03h	Newest acknowledged message	—	0 - 255	U8	rw	No	ALL	No	A
	04h	New messages available	—	0 - 1	BOOL	ro	No	ALL	No	X
	05h	Flags	—	0 - 65535	U16	rw	No	ALL	Yes	A
	06h	Diagnosis message 1	—	—	OS	ro	No	ALL	No	X
	:									
	13h	Diagnosis message 14	—	—	OS	ro	No	ALL	No	X

CoE communication profile area (1000h to 1FFFh)

Index	Sub-Index	Name	Units	Range	Data Type	Access	PDO	Op-mode	EEPROM	Attribute
1600h	-	Receive PDO mapping 1	—	—	—	—	—	—	—	—
	00h	Number of entries	—	0 - 32	U8	rw	No	ALL	Yes	S
	01h	1st receive PDO mapped	—	0 - 4294967295	U32	rw	No	ALL	Yes	S
	02h	2nd receive PDO mapped	—	0 - 4294967295	U32	rw	No	ALL	Yes	S
	03h	3rd receive PDO mapped	—	0 - 4294967295	U32	rw	No	ALL	Yes	S
	04h	4th receive PDO mapped	—	0 - 4294967295	U32	rw	No	ALL	Yes	S
	05h	5th receive PDO mapped	—	0 - 4294967295	U32	rw	No	ALL	Yes	S
	06h	6th receive PDO mapped	—	0 - 4294967295	U32	rw	No	ALL	Yes	S
	07h	7th receive PDO mapped	—	0 - 4294967295	U32	rw	No	ALL	Yes	S
	08h	8th receive PDO mapped	—	0 - 4294967295	U32	rw	No	ALL	Yes	S
	:									
	20h	32nd receive PDO mapped	—	0 - 4294967295	U32	rw	No	ALL	Yes	S
1601h	-	Receive PDO mapping 2	—	—	—	—	—	—	—	—
	00h	Number of entries	—	0 - 32	U8	rw	No	ALL	Yes	S
	01h	1st receive PDO mapped	—	0 - 4294967295	U32	rw	No	ALL	Yes	S
	02h	2nd receive PDO mapped	—	0 - 4294967295	U32	rw	No	ALL	Yes	S
	03h	3rd receive PDO mapped	—	0 - 4294967295	U32	rw	No	ALL	Yes	S
	04h	4th receive PDO mapped	—	0 - 4294967295	U32	rw	No	ALL	Yes	S
	05h	5th receive PDO mapped	—	0 - 4294967295	U32	rw	No	ALL	Yes	S
	06h	6th receive PDO mapped	—	0 - 4294967295	U32	rw	No	ALL	Yes	S
	07h	7th receive PDO mapped	—	0 - 4294967295	U32	rw	No	ALL	Yes	S
	08h	8th receive PDO mapped	—	0 - 4294967295	U32	rw	No	ALL	Yes	S
	:									
	20h	32nd receive PDO mapped	—	0 - 4294967295	U32	rw	No	ALL	Yes	S
1602h	-	Receive PDO mapping 3	—	—	—	—	—	—	—	—
	00h	Number of entries	—	0 - 32	U8	rw	No	ALL	Yes	S
	01h	1st receive PDO mapped	—	0 - 4294967295	U32	rw	No	ALL	Yes	S
	02h	2nd receive PDO mapped	—	0 - 4294967295	U32	rw	No	ALL	Yes	S
	03h	3rd receive PDO mapped	—	0 - 4294967295	U32	rw	No	ALL	Yes	S
	04h	4th receive PDO mapped	—	0 - 4294967295	U32	rw	No	ALL	Yes	S
	05h	5th receive PDO mapped	—	0 - 4294967295	U32	rw	No	ALL	Yes	S
	06h	6th receive PDO mapped	—	0 - 4294967295	U32	rw	No	ALL	Yes	S
	07h	7th receive PDO mapped	—	0 - 4294967295	U32	rw	No	ALL	Yes	S
	08h	8th receive PDO mapped	—	0 - 4294967295	U32	rw	No	ALL	Yes	S
	:									
	20h	32nd receive PDO mapped	—	0 - 4294967295	U32	rw	No	ALL	Yes	S
1603h	-	Receive PDO mapping 4	—	—	—	—	—	—	—	—
	00h	Number of entries	—	0 - 32	U8	rw	No	ALL	Yes	S
	01h	1st receive PDO mapped	—	0 - 4294967295	U32	rw	No	ALL	Yes	S
	02h	2nd receive PDO mapped	—	0 - 4294967295	U32	rw	No	ALL	Yes	S
	03h	3rd receive PDO mapped	—	0 - 4294967295	U32	rw	No	ALL	Yes	S
	04h	4th receive PDO mapped	—	0 - 4294967295	U32	rw	No	ALL	Yes	S
	05h	5th receive PDO mapped	—	0 - 4294967295	U32	rw	No	ALL	Yes	S
	06h	6th receive PDO mapped	—	0 - 4294967295	U32	rw	No	ALL	Yes	S
	07h	7th receive PDO mapped	—	0 - 4294967295	U32	rw	No	ALL	Yes	S
	08h	8th receive PDO mapped	—	0 - 4294967295	U32	rw	No	ALL	Yes	S
	:									
	20h	32nd receive PDO mapped	—	0 - 4294967295	U32	rw	No	ALL	Yes	S

CoE communication profile area (1000h to 1FFFh)

Index	Sub-Index	Name	Units	Range	Data Type	Access	PDO	Op-mode	EEPROM	Attribute
1A00h	-	Transmit PDO mapping 1	—	—	—	—	—	—	—	—
	00h	Number of entries	—	0 - 32	U8	rw	No	ALL	Yes	S
	01h	1st transmit PDO mapped	—	0 - 4294967295	U32	rw	No	ALL	Yes	S
	02h	2nd transmit PDO mapped	—	0 - 4294967295	U32	rw	No	ALL	Yes	S
	03h	3rd transmit PDO mapped	—	0 - 4294967295	U32	rw	No	ALL	Yes	S
	04h	4th transmit PDO mapped	—	0 - 4294967295	U32	rw	No	ALL	Yes	S
	05h	5th transmit PDO mapped	—	0 - 4294967295	U32	rw	No	ALL	Yes	S
	06h	6th transmit PDO mapped	—	0 - 4294967295	U32	rw	No	ALL	Yes	S
	07h	7th transmit PDO mapped	—	0 - 4294967295	U32	rw	No	ALL	Yes	S
	08h	8th transmit PDO mapped	—	0 - 4294967295	U32	rw	No	ALL	Yes	S
	:									
	20h	32nd transmit PDO mapped	—	0 - 4294967295	U32	rw	No	ALL	Yes	S
1A01h	-	Transmit PDO mapping 2	—	—	—	—	—	—	—	—
	00h	Number of entries	—	0 - 32	U8	rw	No	ALL	Yes	S
	01h	1st transmit PDO mapped	—	0 - 4294967295	U32	rw	No	ALL	Yes	S
	02h	2nd transmit PDO mapped	—	0 - 4294967295	U32	rw	No	ALL	Yes	S
	03h	3rd transmit PDO mapped	—	0 - 4294967295	U32	rw	No	ALL	Yes	S
	04h	4th transmit PDO mapped	—	0 - 4294967295	U32	rw	No	ALL	Yes	S
	05h	5th transmit PDO mapped	—	0 - 4294967295	U32	rw	No	ALL	Yes	S
	06h	6th transmit PDO mapped	—	0 - 4294967295	U32	rw	No	ALL	Yes	S
	07h	7th transmit PDO mapped	—	0 - 4294967295	U32	rw	No	ALL	Yes	S
	08h	8th transmit PDO mapped	—	0 - 4294967295	U32	rw	No	ALL	Yes	S
	:									
	20h	32nd transmit PDO mapped	—	0 - 4294967295	U32	rw	No	ALL	Yes	S
1A02h	-	Transmit PDO mapping 3	—	—	—	—	—	—	—	—
	00h	Number of entries	—	0 - 32	U8	rw	No	ALL	Yes	S
	01h	1st transmit PDO mapped	—	0 - 4294967295	U32	rw	No	ALL	Yes	S
	02h	2nd transmit PDO mapped	—	0 - 4294967295	U32	rw	No	ALL	Yes	S
	03h	3rd transmit PDO mapped	—	0 - 4294967295	U32	rw	No	ALL	Yes	S
	04h	4th transmit PDO mapped	—	0 - 4294967295	U32	rw	No	ALL	Yes	S
	05h	5th transmit PDO mapped	—	0 - 4294967295	U32	rw	No	ALL	Yes	S
	06h	6th transmit PDO mapped	—	0 - 4294967295	U32	rw	No	ALL	Yes	S
	07h	7th transmit PDO mapped	—	0 - 4294967295	U32	rw	No	ALL	Yes	S
	08h	8th transmit PDO mapped	—	0 - 4294967295	U32	rw	No	ALL	Yes	S
	:									
	20h	32nd transmit PDO mapped	—	0 - 4294967295	U32	rw	No	ALL	Yes	S
1A03h	-	Transmit PDO mapping 4	—	—	—	—	—	—	—	—
	00h	Number of entries	—	0 - 32	U8	rw	No	ALL	Yes	S
	01h	1st transmit PDO mapped	—	0 - 4294967295	U32	rw	No	ALL	Yes	S
	02h	2nd transmit PDO mapped	—	0 - 4294967295	U32	rw	No	ALL	Yes	S
	03h	3rd transmit PDO mapped	—	0 - 4294967295	U32	rw	No	ALL	Yes	S
	04h	4th transmit PDO mapped	—	0 - 4294967295	U32	rw	No	ALL	Yes	S
	05h	5th transmit PDO mapped	—	0 - 4294967295	U32	rw	No	ALL	Yes	S
	06h	6th transmit PDO mapped	—	0 - 4294967295	U32	rw	No	ALL	Yes	S
	07h	7th transmit PDO mapped	—	0 - 4294967295	U32	rw	No	ALL	Yes	S
	08h	8th transmit PDO mapped	—	0 - 4294967295	U32	rw	No	ALL	Yes	S
	:									
	20h	32nd transmit PDO mapped	—	0 - 4294967295	U32	rw	No	ALL	Yes	S

CoE communication profile area (1000h to 1FFFh)

Index	Sub-Index	Name	Units	Range	Data Type	Access	PDO	Op-mode	EEPROM	Attribute
1C00h	-	Sync manager communication type	—	—	—	—	—	—	—	—
	00h	Number of used sync manager channels	—	0 - 255	U8	ro	No	ALL	No	X
	01h	Communication type sync manager 0	—	0 - 4	U8	ro	No	ALL	No	X
	02h	Communication type sync manager 1	—	0 - 4	U8	ro	No	ALL	No	X
	03h	Communication type sync manager 2	—	0 - 4	U8	ro	No	ALL	No	X
	04h	Communication type sync manager 3	—	0 - 4	U8	ro	No	ALL	No	X
1C12h	-	Sync manager channel 2	—	—	—	—	—	—	—	—
	00h	Number of assigned PDOs	—	0 – 4	U8	rw	No	ALL	Yes	S
	01h	PDO mapping object index of assigned RxPDO 1	—	1600h – 1603h	U16	rw	No	ALL	Yes	S
	02h	PDO mapping object index of assigned RxPDO 2	—	1600h – 1603h	U16	rw	No	ALL	Yes	S
	03h	PDO mapping object index of assigned RxPDO 3	—	1600h – 1603h	U16	rw	No	ALL	Yes	S
	04h	PDO mapping object index of assigned RxPDO 4	—	1600h – 1603h	U16	rw	No	ALL	Yes	S
1C13h	-	Sync manager channel 3	—	—	—	—	—	—	—	—
	00h	Number of assigned PDOs	—	0 – 4	U8	rw	No	ALL	Yes	S
	01h	PDO mapping object index of assigned TxPDO 1	—	1A00h – 1A03h	U16	rw	No	ALL	Yes	S
	02h	PDO mapping object index of assigned TxPDO 2	—	1A00h – 1A03h	U16	rw	No	ALL	Yes	S
	03h	PDO mapping object index of assigned TxPDO 3	—	1A00h – 1A03h	U16	rw	No	ALL	Yes	S
	04h	PDO mapping object index of assigned TxPDO 4	—	1A00h – 1A03h	U16	rw	No	ALL	Yes	S

CoE communication profile area (1000h to 1FFFh)

Index	Sub-Index	Name	Units	Range	Data Type	Access	PDO	Op-mode	EEPROM	Attribute
1C32h	-	Sync manager 2 synchronization	—	—	—	—	—	—	—	—
	00h	Number of sub-objects	—	0 - 255	U8	ro	No	ALL	No	X
	01h	Sync mode	—	0 - 65535	U16	rw	No	ALL	Yes	S
	02h	Cycle time	ns	0 - 4294967295	U32	rw	No	ALL	Yes	S
	03h	Shift time	ns	0 - 4294967295	U32	ro	No	ALL	No	X
	04h	Sync modes supported	—	0 - 65535	U16	ro	No	ALL	No	X
	05h	Minimum cycle time	ns	0 - 4294967295	U32	ro	No	ALL	No	X
	06h	Calc and copy time	ns	0 - 4294967295	U32	ro	No	ALL	No	X
	08h	Command	—	0 - 65535	U16	ro	No	ALL	No	X
	09h	Delay time	ns	0 - 4294967295	U32	ro	No	ALL	No	X
	0Ah	Sync0 cycle time	ns	0 - 4294967295	U32	ro	No	ALL	No	X
	0Bh	Cycle time too small	—	0 - 65535	U16	ro	No	ALL	No	X
	0Ch	SM-event missed	—	0 - 65535	U16	ro	No	ALL	No	X
	0Dh	Shift time too short	—	0 - 65535	U16	ro	No	ALL	No	X
	0Eh	RxPDO toggle failed	—	0 - 65535	U16	ro	No	ALL	No	X
	20h	Sync error	—	0 - 1	BOOL	ro	No	ALL	No	X
1C33h	-	Sync manager 3 synchronization	—	—	—	—	—	—	—	—
	00h	Number of sub-objects	—	0 - 255	U8	ro	No	ALL	No	X
	01h	Sync mode	—	0 - 65535	U16	rw	No	ALL	Yes	S
	02h	Cycle time	ns	0 - 4294967295	U32	ro	No	ALL	No	X
	03h	Shift time	ns	0 - 4294967295	U32	rw	No	ALL	No	S
	04h	Sync modes supported	—	0 - 65535	U16	ro	No	ALL	No	X
	05h	Minimum cycle time	ns	0 - 4294967295	U32	ro	No	ALL	No	X
	06h	Calc and copy time	ns	0 - 4294967295	U32	ro	No	ALL	No	X
	08h	Command	—	0 - 65535	U16	ro	No	ALL	No	X
	09h	Delay time	ns	0 - 4294967295	U32	ro	No	ALL	No	X
	0Ah	Sync0 cycle time	ns	0 - 4294967295	U32	ro	No	ALL	No	X
	0Bh	Cycle time too small	—	0 - 65535	U16	ro	No	ALL	No	X
	0Ch	SM-event missed	—	0 - 65535	U16	ro	No	ALL	No	X
	0Dh	Shift time too short	—	0 - 65535	U16	ro	No	ALL	No	X
	0Eh	RxPDO toggle failed	—	0 - 65535	U16	ro	No	ALL	No	X
	20h	Sync error	—	0 - 1	BOOL	ro	No	ALL	No	X

Servo parameter area (3000h to 3FFFh)

Category 0: Basic configuration

Index	Sub-Index	Name	Units	Range	Data Type	Access	PDO	Op-mode	EEPROM	Attribute
3000h	00h	For manufacturer’s use	—	—	I16	—	—	—	—	-
3001h	00h	Control mode setup	—	0 - 6	I16	rw	No	ALL	Yes	R
3002h	00h	Real-time auto-gain tuning setup	—	0 - 6	I16	rw	No	ALL	Yes	B
3003h	00h	Real-time auto-tuning machine stiffness setup	—	0 - 31	I16	rw	No	ALL	Yes	B
3004h	00h	Inertia ratio	%	0 - 10000	I16	rw	No	ALL	Yes	B
3008h	00h	For manufacturer’s use	—	—	I32	—	—	—	—	-
3009h	00h	For manufacturer’s use	—	—	I32	—	—	—	—	-
3010h	00h	For manufacturer’s use	—	—	I32	—	—	—	—	-
3011h	00h	Number of output pulses per motor revolution	pulse/r	1 - 2097152	I32	rw	No	ALL	Yes	R
3012h	00h	Reversal of pulse output logic	—	0 - 3	I16	rw	No	ALL	Yes	R
3013h	00h	1st torque limit	%	0 - 500	I16	rw	No	ALL	Yes	B
3014h	00h	Position deviation excess setup	command	0 - 1073741824	I32	rw	No	csp pp hm ip	Yes	A
3015h	00h	Absolute encoder setup	—	0 - 4	I16	rw	No	ALL	Yes	C
3016h	00h	External regenerative resistor setup	—	0 - 3	I16	rw	No	ALL	Yes	C
3017h	00h	Selection of load factor for external regenerative resistor	—	0 - 4	I16	rw	No	ALL	Yes	C
3018h	00h	For manufacturer's use	—	—	I16	—	—	—	—	-

Servo parameter area (3000h to 3FFFh)

Category 1: Gain tuning

Index	Sub-Index	Name	Units	Range	Data Type	Access	PDO	Op-mode	EEPROM	Attribute
3100h	00h	1st gain of position loop	0.1/s	0 - 30000	I16	rw	No	csp pp hm ip	Yes	B
3101h	00h	1st velocity loop gain	0.1Hz	1 - 32767	I16	rw	No	ALL	Yes	B
3102h	00h	1st velocity loop integration time constant	0.1ms	1 - 10000	I16	rw	No	ALL	Yes	B
3103h	00h	1st filter of velocity detection	—	0 - 5	I16	rw	No	ALL	Yes	B
3104h	00h	1st torque filter time constant	0.01ms	0 - 2500	I16	rw	No	ALL	Yes	B
3105h	00h	2nd gain of position loop	0.1/s	0 - 30000	I16	rw	No	csp pp hm ip	Yes	B
3106h	00h	2nd velocity loop gain	0.1Hz	1 - 32767	I16	rw	No	ALL	Yes	B
3107h	00h	2nd velocity loop integration time constant	0.1ms	1 - 10000	I16	rw	No	ALL	Yes	B
3108h	00h	2nd filter of velocity detection	—	0 - 5	I16	rw	No	ALL	Yes	B
3109h	00h	2nd torque filter time constant	0.01ms	0 - 2500	I16	rw	No	ALL	Yes	B
3110h	00h	Velocity feed forward gain	0.1%	0 - 4000	I16	rw	No	csp pp hm ip	Yes	B
3111h	00h	Velocity feed forward filter	0.01ms	0 - 6400	I16	rw	No	csp pp hm ip	Yes	B
3112h	00h	Torque feed forward gain	0.1%	0 - 2000	I16	rw	No	csp pp hm ip csv pv	Yes	B
3113h	00h	Torque feed forward filter	0.01ms	0 - 6400	I16	rw	No	csp pp hm ip csv pv	Yes	B

Servo parameter area (3000h to 3FFFh)

Category 1: Gain tuning

Index	Sub-Index	Name	Units	Range	Data Type	Access	PDO	Op-mode	EEPROM	Attribute
3114h	00h	2nd gain setup	—	0 - 1	I16	rw	No	ALL	Yes	B
3115h	00h	Mode of position control switching	—	0 - 10	I16	rw	No	csp pp hm ip	Yes	B
3116h	00h	Delay time of position control switching	0.1ms	0 - 10000	I16	rw	No	csp pp hm ip	Yes	B
3117h	00h	Level of position control switching	—	0 - 20000	I16	rw	No	csp pp hm ip	Yes	B
3118h	00h	Hysteresis at position control switching	—	0 - 20000	I16	rw	No	csp pp hm ip	Yes	B
3119h	00h	Position gain switching time	0.1ms	0 - 10000	I16	rw	No	csp pp hm ip	Yes	B
3120h	00h	Mode of velocity control switching	—	0 - 5	I16	rw	No	csv pv	Yes	B
3121h	00h	Delay time of velocity control switching	0.1ms	0 - 10000	I16	rw	No	csv pv	Yes	B
3122h	00h	Level of velocity control switching	—	0 - 20000	I16	rw	No	csv pv	Yes	B
3123h	00h	Hysteresis at velocity control switching	—	0 - 20000	I16	rw	No	csv pv	Yes	B
3124h	00h	Mode of torque control switching	—	0 - 3	I16	rw	No	cst tq	Yes	B
3125h	00h	Delay time of torque control switching	0.1ms	0 - 10000	I16	rw	No	cst tq	Yes	B
3126h	00h	Level of torque control switching	—	0 - 20000	I16	rw	No	cst tq	Yes	B
3127h	00h	Hysteresis at torque control switching	—	0 - 20000	I16	rw	No	cst tq	Yes	B
3128h	00h	For manufacturer's use	—	—	I16	—	—	—	—	-
3129h	00h	For manufacturer's use	—	—	I16	—	—	—	—	-
3130h	00h	For manufacturer's use	—	—	I16	—	—	—	—	-
3131h	00h	For manufacturer's use	—	—	I16	—	—	—	—	-
3132h	00h	For manufacturer's use	—	—	I16	—	—	—	—	-
3133h	00h	For manufacturer's use	—	—	I16	—	—	—	—	-
3134h	00h	For manufacturer's use	—	—	I16	—	—	—	—	-
3135h	00h	For manufacturer's use	—	—	I16	—	—	—	—	-
3136h	00h	For manufacturer's use	—	—	I16	—	—	—	—	-
3137h	00h	For manufacturer's use	—	—	I16	—	—	—	—	-
3138h	00h	For manufacturer's use	—	—	I16	—	—	—	—	-
3139h	00h	For manufacturer's use	—	—	I16	—	—	—	—	-
3140h	00h	For manufacturer's use	—	—	I16	—	—	—	—	-
3141h	00h	For manufacturer's use	—	—	I16	—	—	—	—	-
3142h	00h	For manufacturer's use	—	—	I16	—	—	—	—	-
3143h	00h	For manufacturer's use	—	—	I16	—	—	—	—	-
3144h	00h	For manufacturer's use	—	—	I16	—	—	—	—	-

Servo parameter area (3000h to 3FFFh)

Category 1: Gain tuning

Index	Sub-Index	Name	Units	Range	Data Type	Access	PDO	Op-mode	EEPROM	Attribute
3145h	00h	For manufacturer's use	—	—	I16	—	—	—	—	-
3146h	00h	For manufacturer's use	—	—	I16	—	—	—	—	-
3147h	00h	For manufacturer's use	—	—	I16	—	—	—	—	-
3148h	00h	For manufacturer's use	—	—	I16	—	—	—	—	-
3149h	00h	For manufacturer's use	—	—	I16	—	—	—	—	-
3150h	00h	For manufacturer's use	—	—	I16	—	—	—	—	-
3151h	00h	For manufacturer's use	—	—	I16	—	—	—	—	-
3152h	00h	For manufacturer's use	—	—	I16	—	—	—	—	-
3153h	00h	For manufacturer's use	—	—	I16	—	—	—	—	-
3154h	00h	For manufacturer's use	—	—	I16	—	—	—	—	-
3155h	00h	For manufacturer's use	—	—	I16	—	—	—	—	-
3156h	00h	For manufacturer's use	—	—	I16	—	—	—	—	-
3157h	00h	For manufacturer's use	—	—	I16	—	—	—	—	-
3158h	00h	For manufacturer's use	—	—	I16	—	—	—	—	-
3159h	00h	For manufacturer's use	—	—	I16	—	—	—	—	-
3160h	00h	For manufacturer's use	—	—	I16	—	—	—	—	-
3161h	00h	For manufacturer's use	—	—	I16	—	—	—	—	-
3162h	00h	For manufacturer's use	—	—	I16	—	—	—	—	-
3163h	00h	For manufacturer's use	—	—	I16	—	—	—	—	-
3164h	00h	For manufacturer's use	—	—	I16	—	—	—	—	-
3165h	00h	For manufacturer's use	—	—	I16	—	—	—	—	-
3166h	00h	For manufacturer's use	—	—	I16	—	—	—	—	-
3167h	00h	For manufacturer's use	—	—	I16	—	—	—	—	-
3168h	00h	For manufacturer's use	—	—	I16	—	—	—	—	-
3169h	00h	For manufacturer's use	—	—	I16	—	—	—	—	-
3170h	00h	For manufacturer's use	—	—	I16	—	—	—	—	-
3171h	00h	For manufacturer's use	—	—	I16	—	—	—	—	-
3172h	00h	For manufacturer's use	—	—	I16	—	—	—	—	-
3173h	00h	For manufacturer's use	—	—	I16	—	—	—	—	-
3174h	00h	For manufacturer's use	—	—	I16	—	—	—	—	-
3175h	00h	For manufacturer's use	—	—	I16	—	—	—	—	-
3176h	00h	For manufacturer's use	—	—	I16	—	—	—	—	-
3177h	00h	For manufacturer's use	—	—	I16	—	—	—	—	-
3178h	00h	For manufacturer's use	—	—	I16	—	—	—	—	-

Servo parameter area (3000h to 3FFFh)

Category 2: Anti-vibration filter

Index	Sub-Index	Name	Units	Range	Data Type	Access	PDO	Op-mode	EEPROM	Attribute
3200h	00h	Adaptive filter mode setup	—	0 - 6	I16	rw	No	csp pp hm ip csv pv	Yes	B
3201h	00h	1st notch frequency	Hz	50 - 5000	I16	rw	No	ALL	Yes	B
3202h	00h	1st notch width selection	—	0 - 20	I16	rw	No	ALL	Yes	B
3203h	00h	1st notch depth selection	—	0 - 99	I16	rw	No	ALL	Yes	B
3204h	00h	2nd notch frequency	Hz	50 - 5000	I16	rw	No	ALL	Yes	B
3205h	00h	2nd notch width selection	—	0 - 20	I16	rw	No	ALL	Yes	B
3206h	00h	2nd notch depth selection	—	0 - 99	I16	rw	No	ALL	Yes	B
3207h	00h	3rd notch frequency	Hz	50 - 5000	I16	rw	No	ALL	Yes	B
3208h	00h	3rd notch width selection	—	0 - 20	I16	rw	No	ALL	Yes	B
3209h	00h	3rd notch depth selection	—	0 - 99	I16	rw	No	ALL	Yes	B
3210h	00h	4th notch frequency	Hz	50 - 5000	I16	rw	No	ALL	Yes	B
3211h	00h	4th notch width selection	—	0 - 20	I16	rw	No	ALL	Yes	B
3212h	00h	4th notch depth selection	—	0 - 99	I16	rw	No	ALL	Yes	B
3213h	00h	Selection of damping filter switching	—	0 - 6	I16	rw	No	csp pp hm ip	Yes	B
3214h	00h	1st damping frequency	0.1Hz	0 - 3000	I16	rw	No	csp pp hm ip	Yes	B
3215h	00h	1st damping filter setup	0.1Hz	0 - 1500	I16	rw	No	csp pp hm ip	Yes	B
3216h	00h	2nd damping frequency	0.1Hz	0 - 3000	I16	rw	No	csp pp hm ip	Yes	B
3217h	00h	2nd damping filter setup	0.1Hz	0 - 1500	I16	rw	No	csp pp hm ip	Yes	B

Servo parameter area (3000h to 3FFFh)

Category 2: Anti-vibration filter

Index	Sub-Index	Name	Units	Range	Data Type	Access	PDO	Op-mode	EEPROM	Attribute
3218h	00h	3rd damping frequency	0.1Hz	0 - 3000	I16	rw	No	csp pp hm ip	Yes	B
3219h	00h	3rd damping filter setup	0.1Hz	0 - 1500	I16	rw	No	csp pp hm ip	Yes	B
3220h	00h	4th damping frequency	0.1Hz	0 - 3000	I16	rw	No	csp pp hm ip	Yes	B
3221h	00h	4th damping filter setup	0.1Hz	0 - 1500	I16	rw	No	csp pp hm ip	Yes	B
3222h	00h	Positional command smoothing filter	0.1ms	0 - 10000	I16	rw	No	csp pp hm ip csv pv	Yes	B
3223h	00h	Positional command FIR filter	0.1ms	0 - 10000	I16	rw	No	csp pp hm ip	Yes	B
3224h	00h	5th notch frequency	Hz	50 - 5000	I16	rw	No	ALL	Yes	B
3225h	00h	5th notch width selection	—	0 - 20	I16	rw	No	ALL	Yes	B
3226h	00h	5th notch depth selection	—	0 - 99	I16	rw	No	ALL	Yes	B
3227h	00h	1st damping width setting	—	0 - 1000	I16	rw	No	csp pp hm ip	Yes	B
3228h	00h	2nd damping width setting	—	0 - 1000	I16	rw	No	csp pp hm ip	Yes	B
3229h	00h	3rd damping width setting	—	0 - 1000	I16	rw	No	csp pp hm ip	Yes	B
3230h	00h	4th damping width setting	—	0 - 1000	I16	rw	No	csp pp hm ip	Yes	B
3231h	00h	For manufacturer's use	—	—	I16	—	—	—	—	-
3232h	00h	For manufacturer's use	—	—	I16	—	—	—	—	-
3233h	00h	For manufacturer's use	—	—	I16	—	—	—	—	-
3234h	00h	For manufacturer's use	—	—	I16	—	—	—	—	-
3235h	00h	For manufacturer's use	—	—	I16	—	—	—	—	-
3236h	00h	For manufacturer's use	—	—	I16	—	—	—	—	-
3237h	00h	For manufacturer's use	—	—	I16	—	—	—	—	-

Servo parameter area (3000h to 3FFFh)

Category 3: Velocity, Torque, and Full-closed controls

Index	Sub-Index	Name	Units	Range	Data Type	Access	PDO	Op-mode	EEPROM	Attribute
3304h	00h	For manufacturer's use	—	—	I16	—	—	—	—	-
3305h	00h	For manufacturer's use	—	—	I16	—	—	—	—	-
3312h	00h	Acceleration time setup	1ms/ (1000r/min)	0 - 10000	I16	rw	No	csv pv	Yes	B
3313h	00h	Deceleration time setup	1ms/ (1000r/min)	0 - 10000	I16	rw	No	csv pv	Yes	B
3314h	00h	Sigmoid acceleration/ deceleration time setup	1ms	0 - 1000	I16	rw	No	csv pv	Yes	B
3317h	00h	Selection of speed limit	—	2	I16	rw	No	cst tq	Yes	B
3321h	00h	For manufacturer's use	—	—	I16	—	—	—	—	-
3322h	00h	For manufacturer's use	—	—	I16	—	—	—	—	-
3323h	00h	External scale selection	—	0 - 2	I16	rw	No	ALL	Yes	R
3324h	00h	Numerator of external scale division	—	0 - 8388608	I32	rw	No	csp(F) pp(F) hm(F) ip(F)	Yes	R
3325h	00h	Denominator of external scale division	—	1 - 8388608	I32	rw	No	csp(F) pp(F) hm(F) ip(F)	Yes	R
3326h	00h	Reversal of direction of external scale	—	0 - 1	I16	rw	No	ALL	Yes	R
3327h	00h	External scale Z phase disconnection detection disable	—	0 - 1	I16	rw	No	ALL	Yes	R
3328h	00h	Hybrid deviation excess setup	command	1 - 134217728	I32	rw	No	csp(F) pp(F) hm(F) ip(F)	Yes	C
3329h	00h	Hybrid deviation clear setup	rotation	0 - 100	I16	rw	No	csp(F) pp(F) hm(F) ip(F)	Yes	C

Servo parameter area (3000h to 3FFFh)

Category 4: I/O monitor

Index	Sub-Index	Name	Units	Range	Data Type	Access	PDO	Op-mode	EEPROM	Attribute
3400h	00h	SI1 input selection	—	0 - 16777215	I32	rw	No	ALL	Yes	C
3401h	00h	SI2 input selection	—	0 - 16777215	I32	rw	No	ALL	Yes	C
3402h	00h	SI3 input selection	—	0 - 16777215	I32	rw	No	ALL	Yes	C
3403h	00h	SI4 input selection	—	0 - 16777215	I32	rw	No	ALL	Yes	C
3404h	00h	SI5 input selection	—	0 - 16777215	I32	rw	No	ALL	Yes	C
3405h	00h	SI6 input selection	—	0 - 16777215	I32	rw	No	ALL	Yes	C
3406h	00h	SI7 input selection	—	0 - 16777215	I32	rw	No	ALL	Yes	C
3407h	00h	SI8 input selection	—	0 - 16777215	I32	rw	No	ALL	Yes	C
3410h	00h	SO1 output selection	—	0 - 16777215	I32	rw	No	ALL	Yes	C
3411h	00h	SO2 output selection	—	0 - 16777215	I32	rw	No	ALL	Yes	C
3412h	00h	SO3 output selection	—	0 - 16777215	I32	rw	No	ALL	Yes	C
3416h	00h	Type of analog monitor 1	—	0 - 28	I16	rw	No	ALL	Yes	A
3417h	00h	Analog monitor 1 output gain	—	0 - 214748364	I32	rw	No	ALL	Yes	A
3418h	00h	Type of analog monitor 2	—	0 - 28	I16	rw	No	ALL	Yes	A
3419h	00h	Analog monitor 2 output gain	—	0 - 214748364	I32	rw	No	ALL	Yes	A
3421h	00h	Analog monitor output setup	—	0 - 2	I16	rw	No	ALL	Yes	A
3422h	00h	For manufacturer’s use	—	—	I16	—	—	—	—	-
3423h	00h	For manufacturer’s use	—	—	I16	—	—	—	—	-
3424h	00h	For manufacturer’s use	—	—	I16	—	—	—	—	-
3431h	00h	Positioning complete (In-position) range	command	0 - 2097152	I32	rw	No	csp pp hm ip	Yes	A
3432h	00h	Positioning complete (In-position) output setup	—	0 - 10	I16	rw	No	csp pp hm ip	Yes	A
3433h	00h	INP hold time	1ms	0 - 30000	I16	rw	No	csp pp hm ip	Yes	A
3434h	00h	Zero-speed	r/min	10 - 20000	I16	rw	No	ALL	Yes	A
3435h	00h	Speed coincidence range	r/min	10 - 20000	I16	rw	No	csv pv cst tq	Yes	A
3436h	00h	At-speed (Speed arrival)	r/min	10 - 20000	I16	rw	No	csv pv cst tq	Yes	A
3437h	00h	Mechanical brake action at stalling setup	1ms	0 - 10000	I16	rw	No	ALL	Yes	B
3438h	00h	Mechanical brake action at running setup	1ms	0 - 32000	I16	rw	No	ALL	Yes	B
3439h	00h	Brake release speed setup	r/min	30 - 3000	I16	rw	No	ALL	Yes	B
3440h	00h	Selection of alarm output 1	—	0 – 40	I16	rw	No	ALL	Yes	A
3441h	00h	Selection of alarm output 2	—	0 - 40	I16	rw	No	ALL	Yes	A
3442h	00h	Positioning complete (In-position) range 2	command	0 - 2097152	I32	rw	No	csp pp hm ip	Yes	A

Servo parameter area (3000h to 3FFFh)

Category 4: I/O monitor

Index	Sub-Index	Name	Units	Range	Data Type	Access	PDO	Op-mode	EEPROM	Attribute
3444h	00h	Position comparison output pulse width setting	0.1ms	0 - 32767	I16	rw	No	ALL	Yes	R
3445h	00h	Position comparison output polarity selection	—	0 – 7	I16	rw	No	ALL	Yes	R
3447h	00h	Pulse output selection	—	0 – 1	I16	rw	No	ALL	Yes	R
3448h	00h	Position comparison value 1	command	-2147483648 - 2147483647	I32	rw	No	ALL	Yes	A
3449h	00h	Position comparison value 2	command	-2147483648 - 2147483647	I32	rw	No	ALL	Yes	A
3450h	00h	Position comparison value 3	command	-2147483648 - 2147483647	I32	rw	No	ALL	Yes	A
3451h	00h	Position comparison value 4	command	-2147483648 - 2147483647	I32	rw	No	ALL	Yes	A
3452h	00h	Position comparison value 5	command	-2147483648 - 2147483647	I32	rw	No	ALL	Yes	A
3453h	00h	Position comparison value 6	command	-2147483648 - 2147483647	I32	rw	No	ALL	Yes	A
3454h	00h	Position comparison value 7	command	-2147483648 - 2147483647	I32	rw	No	ALL	Yes	A
3455h	00h	Position comparison value 8	command	-2147483648 - 2147483647	I32	rw	No	ALL	Yes	A
3456h	00h	Position comparison output delay compensation amount	0.1us	-32768 - 32767	I16	rw	No	ALL	Yes	R
3457h	00h	Position comparison output assignment setting	—	-2147483648 - 2147483647	I32	rw	No	ALL	Yes	R

Servo parameter area (3000h to 3FFFh)

Category 5: Extended configuration

Index	Sub-Index	Name	Units	Range	Data Type	Access	PDO	Op-mode	EEPROM	Attribute
3503h	00h	Denominator of pulse output division	—	0 - 8388608	I32	rw	No	ALL	Yes	R
3504h	00h	Over-travel inhibit input setup	—	0 - 2	I16	rw	No	ALL	Yes	C
3505h	00h	Sequence at over-travel inhibit	—	0 - 2	I16	rw	No	ALL	Yes	C
3506h	00h	Sequence at Servo-Off	—	0 - 9	I16	rw	No	ALL	Yes	B
3507h	00h	Sequence upon main power off	—	0 - 9	I16	rw	No	ALL	Yes	B
3508h	00h	L/V trip selection upon main power off	—	0 - 3	I16	rw	No	ALL	Yes	B
3509h	00h	Detection time of main power off	1ms	70 - 2000	I16	rw	No	ALL	Yes	C
3510h	00h	Sequence at alarm	—	0 - 7	I16	rw	No	ALL	Yes	B
3511h	00h	Torque setup for emergency stop	%	0 - 500	I16	rw	No	ALL	Yes	B
3512h	00h	Over-load level setup	%	0 - 500	I16	rw	No	ALL	Yes	A
3513h	00h	Over-speed level setup	r/min	0 - 20000	I16	rw	No	ALL	Yes	B
3514h	00h	Motor working range setup	0.1 rotation	0 - 1000	I16	rw	No	csp pp hm ip	Yes	A
3515h	00h	Control input signal reading setup	—	0 - 3	I16	rw	No	ALL	Yes	C
3516h	00h	For manufacturer's use	—	—	I16	—	—	—	—	–
3520h	00h	Position setup unit select	—	0 - 1	I16	rw	No	csp pp hm ip	Yes	C
3521h	00h	Selection of torque limit	—	0 - 4	I16	rw	No	csp pp hm ip csv pv	Yes	B
3522h	00h	2nd torque limit	%	0 - 500	I16	rw	No	csp pp hm ip csv pv	Yes	B
3525h	00h	For manufacturer’s use	—	—	I16	—	—	—	—	-
3526h	00h	For manufacturer’s use	—	—	I16	—	—	—	—	-
3529h	00h	For manufacturer’s use	—	—	I16	—	—	—	—	-
3531h	00h	USB axis address	—	0 - 127	I16	rw	No	ALL	Yes	C
3533h	00h	Pulse regenerative output limit setup	—	0 - 1	I16	rw	No	ALL	Yes	C
3534h	00h	For manufacturer’s use	—	—	I16	—	—	—	—	-
3536h	00h	For manufacturer's use	—	—	I16	—	—	—	—	–
3545h	00h	Quadrant glitch positive-direction compensation value	0.1%	-1000 - 1000	I16	rw	No	csp pp hm ip	Yes	B
3546h	00h	Quadrant glitch negative-direction compensation value	0.1%	-1000 - 1000	I16	rw	No	csp pp hm ip	Yes	B

Servo parameter area (3000h to 3FFFh)

Category 5: Extended configuration

Index	Sub-Index	Name	Units	Range	Data Type	Access	PDO	Op-mode	EEPROM	Attribute
3547h	00h	Quadrant glitch compensation delay time	1ms	0 - 1000	I16	rw	No	csp pp hm ip	Yes	B
3548h	00h	Quadrant glitch compensation filter setting L	0.01ms	0 - 6400	I16	rw	No	csp pp hm ip	Yes	B
3549h	00h	Quadrant glitch compensation filter setting H	0.1ms	0 - 10000	I16	rw	No	csp pp hm ip	Yes	B
3550h	00h	For manufacturer's use	—	—	I32	—	—	—	—	-
3551h	00h	For manufacturer's use	—	—	I32	—	—	—	—	-
3552h	00h	For manufacturer's use	—	—	I32	—	—	—	—	-
3553h	00h	For manufacturer's use	—	—	I32	—	—	—	—	-
3554h	00h	For manufacturer's use	—	—	I32	—	—	—	—	-
3555h	00h	For manufacturer's use	—	—	I32	—	—	—	—	-
3556h	00h	Slow stop deceleration time setting	1ms/ (1000r/min)	0 - 10000	I16	rw	No	csp(s) pp(s) hm(s) ip(s)	Yes	B
3557h	00h	Slow stop S-shape acceleration and deceleration setting	1ms	0 - 1000	I16	rw	No	csp(s) pp(s) hm(s) ip(s)	Yes	B
3566h	00h	Deterioration diagnosis convergence judgment time	0.1s	0 - 10000	I16	rw	No	ALL	Yes	A
3567h	00h	Deterioration diagnosis inertia ratio upper limit	%	0 - 10000	I16	rw	No	ALL	Yes	A
3568h	00h	Deterioration diagnosis inertia ratio lower limit	%	0 - 10000	I16	rw	No	ALL	Yes	A
3569h	00h	Deterioration diagnosis unbalanced load upper limit	0.1%	-1000 - 1000	I16	rw	No	ALL	Yes	A
3570h	00h	Deterioration diagnosis unbalanced load lower limit	0.1%	-1000 - 1000	I16	rw	No	ALL	Yes	A
3571h	00h	Deterioration diagnosis dynamic friction upper limit	0.1%	-1000 - 1000	I16	rw	No	ALL	Yes	A
3572h	00h	Deterioration diagnosis dynamic friction lower limit	0.1%	-1000 - 1000	I16	rw	No	ALL	Yes	A
3573h	00h	Deterioration diagnosis viscous friction upper limit	0.1%/ (10000r/min)	0 - 10000	I16	rw	No	ALL	Yes	A
3574h	00h	Deterioration diagnosis viscous friction lower limit	0.1%/ (10000r/min)	0 - 10000	I16	rw	No	ALL	Yes	A
3575h	00h	Deterioration diagnosis velocity setting	r/min	-20000 - 20000	I16	rw	No	ALL	Yes	A
3576h	00h	Deterioration diagnosis torque average time	1ms	0 - 10000	I16	rw	No	ALL	Yes	A
3577h	00h	Deterioration diagnosis torque upper limit	0.1%	-1000 - 1000	I16	rw	No	ALL	Yes	A
3578h	00h	Deterioration diagnosis torque lower limit	0.1%	-1000 - 1000	I16	rw	No	ALL	Yes	A

Servo parameter area (3000h to 3FFFh)

Category 6: Specific configuration

Index	Sub-Index	Name	Units	Range	Data Type	Access	PDO	Op-mode	EEPROM	Attribute
3602h	00h	Speed deviation excess setup	r/min	0 - 20000	I16	rw	No	csp(s) pp(s) hm(s) ip(s)	Yes	A
3605h	00h	Position 3rd gain valid time	0.1ms	0 - 10000	I16	rw	No	csp pp hm ip	Yes	B
3606h	00h	Position 3rd gain scale factor	%	50 - 1000	I16	rw	No	csp pp hm ip	Yes	B
3607h	00h	Torque command additional value	%	-100 - 100	I16	rw	No	csp pp hm ip csv pv	Yes	B
3608h	00h	Positive direction torque compensation value	%	-100 - 100	I16	rw	No	csp pp hm ip	Yes	B
3609h	00h	Negative direction torque compensation value	%	-100 - 100	I16	rw	No	csp pp hm ip	Yes	B
3610h	00h	Function expansion setup	—	-32768 - 32767	I16	rw	No	ALL	Yes	B
3611h	00h	Current response setup	%	10 - 100	I16	rw	No	ALL	Yes	B
3614h	00h	Emergency stop time at alarm	1ms	0 - 1000	I16	rw	No	ALL	Yes	B
3615h	00h	2nd over-speed level setup	r/min	0 - 20000	I16	rw	No	ALL	Yes	B
3618h	00h	Power-up wait time	100ms	0 - 100	I16	rw	No	ALL	Yes	R
3619h	00h	For manufacturer’s use	—	—	I16	—	—	—	—	—
3620h	00h	For manufacturer’s use	—	—	I16	—	—	—	—	—
3621h	00h	For manufacturer’s use	—	—	I32	—	—	—	—	—
3622h	00h	AB phase external scale pulse outputting method selection	—	0 - 1	I16	rw	No	csp(F) pp(F) hm(F) ip(F)	Yes	R

Servo parameter area (3000h to 3FFFh)

Category 6: Specific configuration

Index	Sub-Index	Name	Units	Range	Data Type	Access	PDO	Op-mode	EEPROM	Attribute
3623h	00h	Load change compensation gain	%	-100 - 100	I16	rw	No	csp pp hm ip csv pv	Yes	B
3624h	00h	Load change compensation filter	0.01ms	10 - 2500	I16	rw	No	csp pp hm ip csv pv	Yes	B
3627h	00h	Warning latch state setup	—	0 - 3	I16	rw	No	ALL	Yes	C
3630h	00h	For manufacturer's use	—	—	I16	—	—	—	—	-
3631h	00h	Real time auto tuning estimation speed	—	0 - 3	I16	rw	No	ALL	Yes	B
3632h	00h	Real time auto tuning custom setup	—	-32768 - 32767	I16	rw	No	ALL	Yes	B
3634h	00h	Hybrid vibration suppression gain	0.1/s	0 - 30000	I16	rw	No	csp(F) pp(F) hm(F) ip(F)	Yes	B
3635h	00h	Hybrid vibration suppression filter	0.01ms	0 - 6400	I16	rw	No	csp(F) pp(F) hm(F) ip(F)	Yes	B
3636h	00h	Dynamic brake operation input setup	—	0 - 1	I16	rw	No	ALL	Yes	R
3637h	00h	Oscillation detecting level	0.1%	0 - 1000	I16	rw	No	ALL	Yes	B
3638h	00h	Alarm mask setup	—	-32768 - 32767	I16	rw	No	ALL	Yes	C
3639h	00h	Alarm mask setup 2	—	-32768 - 32767	I16	rw	No	ALL	Yes	C
3641h	00h	1st damping depth	—	0 - 1000	I16	rw	No	csp pp hm ip	Yes	B
3642h	00h	2-stage torque filter time constant	0.01ms	0 - 2500	I16	rw	No	ALL	Yes	B
3643h	00h	2-stage torque filter attenuation term	—	0 - 1000	I16	rw	No	ALL	Yes	B
3647h	00h	Function expansion setup 2	—	-32768 - 32767	I16	rw	No	ALL	Yes	R
3648h	00h	Tuning filter	0.1ms	0 - 2000	I16	rw	No	csp pp hm ip csv pv	Yes	B
3649h	00h	Command / tuning filter damping	—	0 – 99	I16	rw	No	csp pp hm ip	Yes	B
3650h	00h	Viscous friction compensating gain	0.1%/ (10000r/min)	0 – 10000	I16	rw	No	csp pp hm ip csv pv	Yes	B

Servo parameter area (3000h to 3FFFh)

Category 6: Specific configuration

Index	Sub-Index	Name	Units	Range	Data Type	Access	PDO	Op-mode	EEPROM	Attribute
3651h	00h	Wait time for emergency stop	ms	0 - 10000	I16	rw	No	ALL	Yes	B
3652h	00h	For manufacturer's use	—	—	I16	—	—	—	—	-
3653h	00h	For manufacturer's use	—	—	I16	—	—	—	—	-
3654h	00h	For manufacturer's use	—	—	I16	—	—	—	—	-
3657h	00h	Torque saturation error protection detection time	1ms	0 - 5000	I16	rw	No	csp pp hm ip csv pv	Yes	B
3658h	00h	For manufacturer's use	—	—	I32	—	—	—	—	-
3659h	00h	For manufacturer's use	—	—	I16	—	—	—	—	-
3660h	00h	2nd damping depth	—	0 - 1000	I16	rw	No	csp pp hm ip	Yes	B
3661h	00h	1st resonance frequency	0.1Hz	0 - 3000	I16	rw	No	csp(s) pp(s) hm(s) ip(s)	Yes	B
3662h	00h	1st resonance attenuation ratio	—	0 - 1000	I16	rw	No	csp(s) pp(s) hm(s) ip(s)	Yes	B
3663h	00h	1st anti-resonance frequency	0.1Hz	0 - 3000	I16	rw	No	csp(s) pp(s) hm(s) ip(s)	Yes	B
3664h	00h	1st anti-resonance attenuation ratio	—	0 - 1000	I16	rw	No	csp(s) pp(s) hm(s) ip(s)	Yes	B
3665h	00h	1st response frequency	0.1Hz	0 - 3000	I16	rw	No	csp(s) pp(s) hm(s) ip(s)	Yes	B
3666h	00h	2nd resonance frequency	0.1Hz	0 - 3000	I16	rw	No	csp(s) pp(s) hm(s) ip(s)	Yes	B
3667h	00h	2nd resonance attenuation ratio	—	0 - 1000	I16	rw	No	csp(s) pp(s) hm(s) ip(s)	Yes	B
3668h	00h	2nd anti-resonance frequency	0.1Hz	0 - 3000	I16	rw	No	csp(s) pp(s) hm(s) ip(s)	Yes	B
3669h	00h	2nd anti-resonance attenuation ratio	—	0 - 1000	I16	rw	No	csp(s) pp(s) hm(s) ip(s)	Yes	B

Servo parameter area (3000h to 3FFFh)

Category 6: Specific configuration

Index	Sub-Index	Name	Units	Range	Data Type	Access	PDO	Op-mode	EEPROM	Attribute
3670h	00h	2nd response frequency	0.1Hz	0 - 3000	I16	rw	No	csp(s) pp(s) hm(s) ip(s)	Yes	B
3671h	00h	3rd damping depth	—	0 - 1000	I16	rw	No	csp pp hm ip	Yes	B
3672h	00h	4th damping depth	—	0 - 1000	I16	rw	No	csp pp hm ip	Yes	B
3673h	00h	Load estimation filter	0.01ms	0 - 2500	I16	rw	No	csp pp hm ip csv pv	Yes	B
3674h	00h	Torque compensation frequency 1	0.1Hz	0 - 5000	I16	rw	No	csp pp hm ip csv pv	Yes	B
3675h	00h	Torque compensation frequency 2	0.1Hz	0 - 5000	I16	rw	No	csp pp hm ip csv pv	Yes	B
3676h	00h	Load estimation count	—	0 - 8	I16	rw	No	csp pp hm ip csv pv	Yes	B
3685h *1)	00h	Retracting operation condition setting	—	-32768 – 32767	I16	rw	No	ALL	Yes	C
3686h *1)	00h	Retracting operation alarm setting	—	0 - 7	I16	rw	No	ALL	Yes	C
3687h	00h	For manufacturer's use	—	—	I32	—	—	—	—	-
3688h	00h	Absolute encoder multi-turn data upper-limit value	—	0 - 65534	I32	rw	No	ALL	Yes	C
3695h	00h	Over-load warning detection level	%	0 - 114	I16	rw	No	ALL	Yes	A
3696h	00h	Over-load warning release level	%	0 - 114	I16	rw	No	ALL	Yes	A
3697h	00h	Function expansion setup 3	—	-2147483648 - 2147483647	I32	rw	No	ALL	Yes	B
3698h	00h	Function expansion setup 4	—	-2147483648 - 2147483647	I32	rw	No	ALL	Yes	R

*1) The first edition of the software version (Ver1.01) does not support it.

Servo parameter area (3000h to 3FFFh)

Category 7: Specific configuration 2

Index	Sub-Index	Name	Units	Range	Data Type	Access	PDO	Op-mode	EEPROM	Attribute
3700h	00h	Display on LED	—	0 - 32767	I16	rw	No	ALL	Yes	A
3701h	00h	Display time setup upon power-up	100ms	0 - 1000	I16	rw	No	ALL	Yes	R
3703h	00h	Output setup during torque limit	—	0 - 1	I16	rw	No	cst tq	Yes	A
3704h	00h	For manufacturer’s use	—	—	I16	—	—	—	—	—
3705h	00h	For manufacturer’s use	—	—	I16	—	—	—	—	—
3706h	00h	For manufacturer’s use	—	—	I16	—	—	—	—	—
3707h	00h	For manufacturer’s use	—	—	I16	—	—	—	—	—
3708h	00h	For manufacturer’s use	—	—	I16	—	—	—	—	—
3709h	00h	Correction time of latch delay 1	25ns	-2000 - 2000	I16	rw	No	ALL	Yes	B
3710h	00h	For manufacturer’s use	—	—	I16	—	—	—	—	—
3711h	00h	For manufacturer’s use	—	—	I32	—	—	—	—	—
3712h	00h	For manufacturer’s use	—	—	I32	—	—	—	—	—
3713h	00h	For manufacturer’s use	—	—	I32	—	—	—	—	—
3714h	00h	Main power off warning detection time	1ms	0 - 2000	I16	rw	No	ALL	Yes	C
3715h	00h	For manufacturer’s use	—	—	I32	—	—	—	—	—
3716h	00h	Torque saturation error protection frequency	time	0 - 30000	I16	rw	No	csv pp hm ip csv pv	Yes	B
3722h	00h	Communication function extended setup 1	—	-32768 - 32767	I16	rw	No	ALL	Yes	R
3723h	00h	Communication function extended setup 2	—	-32768 - 32767	I16	rw	No	ALL	Yes	B
3724h	00h	Communication function extended setup 3	—	-32768 - 32767	I16	rw	No	ALL	Yes	C
3739h	00h	For manufacturer’s use	—	—	I16	—	—	—	—	—
3740h	00h	Station Alias setup(high)	—	0 - 255	I16	rw	No	ALL	Yes	R
3741h	00h	Station Alias selection	—	0 - 2	I16	rw	No	ALL	Yes	R
3742h	00h	Maximum continuation communication error	—	-32768 - 32767	I16	rw	No	ALL	Yes	R
3743h	00h	Lost link detection time	ms	0 - 32767	I16	rw	No	ALL	Yes	R
3744h	00h	Software version	—	-2147483648 – 2147483647	I32	ro	No	ALL	Yes	X
3787h	00h	Communication function extended setup 5	—	-32768 - 32767	I16	rw	No	ALL	Yes	C
3792h	00h	Correction time of latch delay 2	25ns	-2000 - 2000	I16	rw	No	ALL	Yes	B
3793h	00h	Homing return speed limit value	r/min	0 - 20000	I16	rw	No	hm	Yes	C
3799h	00h	Communication function extended setup 6	—	-32768 - 32767	I16	rw	No	ALL	Yes	B
37A0h	00h	For manufacturer's use	—	—	I16	—	—	—	—	—
37A1h	00h	For manufacturer's use	—	—	I32	—	—	—	—	—
37A2h	00h	For manufacturer's use	—	—	I32	—	—	—	—	—
37A3h	00h	For manufacturer's use	—	—	I32	—	—	—	—	—
37A4h	00h	For manufacturer's use	—	—	I32	—	—	—	—	—
37A8h	00h	For manufacturer's use	—	—	I16	—	—	—	—	—
37A9h	00h	For manufacturer's use	—	—	I16	—	—	—	—	—
37B0h	00h	For manufacturer's use	—	—	I32	—	—	—	—	—

Servo parameter area (3000h to 3FFFh)

Category 8: Specific configuration 3

Index	Sub-Index	Name	Units	Range	Data Type	Access	PDO	Op-mode	EEPROM	Attribute
3800h	00h	For manufacturer's use	—	—	I16	—	—	—	—	-
3801h *1)	00h	Profile linear acceleration constant	10000 command/s2	1 – 429496	I32	rw	No	ALL	Yes	B
3802h	00h	For manufacturer's use	—	—	I16	—	—	—	—	-
3803h	00h	For manufacturer's use	—	—	I16	—	—	—	—	-
3804h	00h	Profile linear deceleration constant	10000 command/s2	1 – 429496	I32	rw	No	ALL	Yes	B
3805h	00h	For manufacturer's use	—	—	I16	—	—	—	—	-
3810h	00h	For manufacturer's use	—	—	I32	—	—	—	—	-
3812h	00h	For manufacturer's use	—	—	I16	—	—	—	—	-
3813h	00h	For manufacturer's use	—	—	I32	—	—	—	—	-
3814h	00h	For manufacturer's use	—	—	I32	—	—	—	—	-
3815h	00h	For manufacturer's use	—	—	I32	—	—	—	—	-
3817h *1)	00h	Relative movement of retracting operation	command	-2147483647 - 2147483647	I32	rw	No	ALL	Yes	B
3818h *1)	00h	Retracting operation speed	command/s	0 - 2147483647	I32	rw	No	ALL	Yes	B
3819h	00h	For manufacturer's use	—	—	I16	—	—	—	—	-

*1) The first edition of the software version (Ver1.01) does not support it.

User-specific area (4000h～4FFFh)

Index	Sub-Index	Name	Units	Range	Data Type	Access	PDO	Op-mode	EEPROM	Attribute
4308h	00h	History number	—	0-3	U8	rw	No	ALL	No	A
4310h	00h	Alarm main no	—	0-127	U8	rw	No	ALL	No	A
4311h	00h	For manufacturer's use	—	—	U8	—	—	—	—	—
4D00h	—	Special function start	—	—	—	—	—	—	—	—
	00h	Number of entries	—	3	U8	ro	No	ALL	No	X
	01h	Special function start flag 1	—	0 – 4294967295	U32	rw	No		No	B
	02h	Special function start flag 2	—	0 – 4294967295	U32	rw	No		No	B
	03h	For manufacturer's use	—	—	U32	rw	—	—	—	—
4D01h	00h	Special function setting 9	—	0 – 65535	U16	rw	No	ALL	No	B
4D10h	—	External scale ID	—	—	—	—	—	—	—	—
	00h	Number of entries	—	2	U8	ro	No	ALL	No	X
	01h	External scale vendor ID	—	—	VS	ro	No		No	X
	02h	External scale model ID	—	—	VS	ro	No		No	X
4D11h	—	For manufacturer's use	—	—	—	—	—	—	—	—
	00h	Number of entries	—	2	U8	—	—	—	—	—
	01h	For manufacturer's use	—	—	U32	—	—	—	—	—
	02h	For manufacturer's use	—	—	U32	—	—	—	—	—
4D12h	00h	Motor serial number	—	—	VS	ro	No	ALL	No	X
4D13h	00h	For manufacturer's use	—	—	VS	—	—	—	—	—
4D14h	00h	For manufacturer's use	—	—	VS	—	—	—	—	—
4D15h *2)	00h	Drive serial number	—	—	VS	ro	No	ALL	No	X
4D29h *3)	00h	Over load factor	0.1%	0 – 65535	U16	ro	TxPDO	ALL	No	X
4DA0h *1)	-	Alarm accessory information	—	—	—	—	—	—	—	—
	00h	Number of entries	—	36-36	U8	ro	No	ALL	No	X
	01h	History number echo	—	0-3	U8	ro	No	ALL	No	X
	02h	Alarm code	—	0-4294967295	U32	ro	No	ALL	No	X
	03h	Control mode	—	-2147483648 – 2147483647	I32	ro	No	ALL	No	X
	04h	Motor speed	r/min	-2147483648 – 2147483647	I32	ro	No	ALL	No	X
	05h	Positional command velocity	r/min	-2147483648 – 2147483647	I32	ro	No	ALL	No	X
	06h	Velocity control command	r/min	-2147483648 – 2147483647	I32	ro	No	ALL	No	X
	07h	Torque command	0.05%	-2147483648 – 2147483647	I32	ro	No	ALL	No	X
	08h	Position command deviation	command	-2147483648 – 2147483647	I32	ro	No	ALL	No	X
	09h	Position actual internal value	pulse	-2147483648 – 2147483647	I32	ro	No	ALL	No	X
	0Ah	For manufacturer's use	—	—	I32	—	—	—	—	—
	0Bh	Input port (logic signal)	—	-2147483648 – 2147483647	I32	ro	No	ALL	No	X
	0Ch	Output port (logic signal)	—	-2147483648 – 2147483647	I32	ro	No	ALL	No	X
	0Dh	Analog input	—	-2147483648 – 2147483647	I32	ro	No	ALL	No	X
	0Eh	For manufacturer's use	—	—	I32	—	—	—	—	—
	0Fh	For manufacturer's use	—	—	I32	—	—	—	—	—
	10h	Overload ratio	0.2%	-2147483648 – 2147483647	I32	ro	No	ALL	No	X
	11h	Regenerative load ratio	%	-2147483648 – 2147483647	I32	ro	No	ALL	No	X
	12h	Voltage across PN	V	-2147483648 – 2147483647	I32	ro	No	ALL	No	X
	13h	Temperature of amplifier	°C	-2147483648 – 2147483647	I32	ro	No	ALL	No	X
	14h	Warning flags	—	-2147483648 – 2147483647	I32	ro	No	ALL	No	X
	15h	Inertia ratio	%	-2147483648 – 2147483647	I32	ro	No	ALL	No	X
	16h	For manufacturer's use	—	—	I32	—	—	—	—	—
	17h	For manufacturer's use	—	—	I32	—	—	—	—	—
	18h	For manufacturer's use	—	—	I32	—	—	—	—	—
	19h	Temperature of encoder	°C	-2147483648 – 2147483647	I32	ro	No	ALL	No	X

*1)4DA0h(Alarm accessory information) does not support PDO.
Since each Sub-Index is read from SDO communication, simultaneity can not be guaranteed.
*2) The first edition of the software version (Ver1.01) does not support it.
*3) It is not supported in software versions corresponding to function extended edition 1 (Ver1.02) or earlier.

User-specific area (4000h～4FFFh)

Index	Sub-Index	Name	Units	Range	Data Type	Access	PDO	Op-mode	EEPROM	Attribute
4DA0h *1)	1Ah	For manufacturer's use	—	—	I32	—	—	—	—	—
	1Bh	For manufacturer's use	—	—	I32	—	—	—	—	—
	1Ch	For manufacturer's use	—	—	I32	—	—	—	—	—
	1Dh	U-phase current detection value	—	-2147483648 – 2147483647	I32	ro	No	ALL	No	X
	1Eh	W-phase current detection value	—	-2147483648 – 2147483647	I32	ro	No	ALL	No	X
	1Fh	For manufacturer's use	—	—	I32	—	—	—	—	—
	20h	For manufacturer's use	—	—	I32	—	—	—	—	—
	21h	Encoder single-turn data	—	-2147483648 – 2147483647	I32	ro	No	ALL	No	X
	22h	Encoder communication error count (accumulated)	time	-2147483648 – 2147483647	I32	ro	No	ALL	No	X
	23h	External scale communication data error count (accumulated)	time	-2147483648 – 2147483647	I32	ro	No	ALL	No	X
	24h	For manufacturer's use	—	—	I32	—	—	—	—	—
4F01h	00h	Following error actual value (after filtering)	command	-2147483648 - 2147483647	I32	ro	TxPDO	pp hm csp	No	X
4F03h	00h	For manufacturer's use	—	—	I32	—	—	—	—	—
4F04h	00h	Position command internal value (after filtering)	command	-2147483648 - 2147483647	I32	ro	TxPDO	pp hm csp	No	X
4F0Bh	00h	For manufacturer's use	—	—	I32	—	—	—	—	—
4F0Ch	00h	Velocity command value (after filtering)	r/min	-2147483648 - 2147483647	I32	ro	TxPDO	pp hm csp	No	X
4F0Dh	00h	External scale position	pulse (External scale)	-2147483648 - 2147483647	I32	ro	TxPDO	pp hm csp	No	X
4F11h	00h	Regenerative load ratio	%	-2147483648 - 2147483647	I32	ro	TxPDO	ALL	No	X
4F21h	00h	Logical input signal	—	0 - 4294967295	U32	ro	TxPDO	ALL	No	X
4F22h	00h	Logical output signal	—	0 - 4294967295	U32	ro	TxPDO	ALL	No	X
4F23h	00h	Logical input signal (expansion portion)	—	0 - 4294967295	U32 *2)	ro	TxPDO	ALL	No	X
4F24h	00h	For manufacturer's use	—	-	U32 *2)	—	—	—	—	—
4F25h	00h	Physical input signal	—	0 - 4294967295	U32 *2)	ro	TxPDO	ALL	No	X
4F26h	00h	Physical output signal	—	0 - 4294967295	U32	ro	TxPDO	ALL	No	X
4F31h	00h	Inertia ratio	%	-2147483648 - 2147483647	I32	ro	No	ALL	No	X
4F32h	00h	Motor automatic identification	—	-2147483648 - 2147483647	I32	ro	No	ALL	No	X
4F33h	00h	Cause of motor no work	—	-2147483648 - 2147483647	I32	ro	No	ALL	No	X
4F34h	00h	Warning flags	—	-2147483648 - 2147483647	I32	ro	No	ALL	No	X
4F36h	00h	For manufacturer's use	—	—	I32	—	—	—	—	—
4F37h	-	Multiple alarm/warning information	—	—	—	—	—	—	—	—
	00h	Number of entries	—	18 - 18	U8	ro	No	ALL	No	X
	01h	Multiple alarm information 1	—	-2147483648 - 2147483647	I32	ro	No	ALL	No	X
	02h	Multiple alarm information 2	—	-2147483648 - 2147483647	I32	ro	No	ALL	No	X
	03h	Multiple alarm information 3	—	-2147483648 - 2147483647	I32	ro	No	ALL	No	X
	04h	Multiple alarm information 4	—	-2147483648 - 2147483647	I32	ro	No	ALL	No	X
	05h	For manufacturer's use	—	—	I32	—	—	—	—	—
	:									
	0Fh	For manufacturer's use	—	—	I32	—	—	—	—	—
	10h	Multiple sub alarm information	—	-2147483648 - 2147483647	I32	ro	No	ALL	No	X
	11h	Multiple warning information 1	—	-2147483648 - 2147483647	I32	ro	No	ALL	No	X
	12h	Multiple warning information 2	—	-2147483648 - 2147483647	I32	ro	No	ALL	No	X

*1)4DA0h(Alarm accessory information) does not support PDO.
Since each Sub-Index is read from SDO communication, simultaneity can not be guaranteed.
*2)In the first edition of the software version (Ver1.01), the Data Type is I32.

User-specific area (4000h～4FFFh)

Index	Sub-Index	Name	Units	Range	Data Type	Access	PDO	Op-mode	EEPROM	Attribute
4F41h	-	Motor encoder data	—	—	—	—	—	—	—	—
	00h	Number of entries	—	2 - 2	U8	ro	No	ALL	No	X
	01h	Mechanical angle (Single-turn data)	pulse	-2147483648 - 2147483647	I32	ro	TxPDO *1)	ALL	No	X
	02h	Multi-turn data	rotation	-2147483648 - 2147483647	I32	ro	TxPDO *1)	ALL	No	X
4F42h	00h	Electrical angle	0.0879°	-2147483648 - 2147483647	I32	ro	No	ALL	No	X
4F44h	00h	Encoder status	—	-2147483648 - 2147483647	I32	ro	No	ALL	No	X
4F46h	00h	For manufacturer's use	—	—	U16	—	—	—	—	—
4F48h	00h	External scale pulse total	pulse (External scale)	-2147483648 - 2147483647	I32	ro	TxPDO	pp hm csp	No	X
4F49h	00h	External scale absolute position	pulse (External scale)	-2147483648 - 2147483647	I32	ro	TxPDO	pp hm csp	No	X
4F4Ah *2)	00h	External scale position deviation	pulse (External scale)	-2147483648 - 2147483647	I32	ro	TxPDO	pp hm csp	No	X
4F51h	00h	For manufacturer's use	—	—	I32	—	—	—	—	—
4F53h	00h	For manufacturer's use	—	—	U32	—	—	—	—	—
4F61h	00h	Power on cumulative time	30min	-2147483648 - 2147483647	I32	ro	No	ALL	No	X
4F62h	00h	Temperature of amplifier	°C	-2147483648 - 2147483647	I32	ro	No	ALL	No	X
4F63h	00h	Temperature of encoder	°C	-2147483648 - 2147483647	I32	ro	No	ALL	No	X
4F64h	00h	Inrush resistance relay operating count	time	-2147483648 - 2147483647	I32	ro	No	ALL	No	X
4F65h	00h	Dynamic brake operating count	time	-2147483648 - 2147483647	I32	ro	No	ALL	No	X
4F66h	00h	Fan operating time	30min	-2147483648 - 2147483647	I32	ro	No	ALL	No	X
4F67h	00h	Fan life expectancy	0.1%	-2147483648 - 2147483647	I32	ro	No	ALL	No	X
4F68h	00h	Capacitor life expectancy	0.1%	-2147483648 - 2147483647	I32	ro	No	ALL	No	X
4F6Ah	00h	For manufacturer's use	—	—	I32	—	—	—	—	—
4F6Bh	00h	For manufacturer's use	—	—	I32	—	—	—	—	—
4F6Ch	00h	Motor power consumption	W	-2147483648 - 2147483647	I32	ro	No	ALL	No	X
4F6Dh	00h	Amount of motor power consumption	Wh	-2147483648 - 2147483647	I32	ro	No	ALL	No	X
4F6Eh	00h	Cumulative value of motor power consumption	Wh	-2147483648 - 2147483647	I32	ro	No	ALL	No	X
4F72h	00h	For manufacturer's use	—	—	I32	—	—	—	—	—
4F73h	00h	For manufacturer's use	—	—	I32	—	—	—	—	—
4F77h	00h	Lost link error count	time	0 - 65535	U16	ro	No	ALL	No	X
4F78h	00h	Synchronization signal error count	time	0 - 65535	U16	ro	No	ALL	No	X
4F81h	00h	Encoder communication error count (accumulated)	time	-2147483648 - 2147483647	I32	ro	No	ALL	No	X
4F82h	00h	For manufacturer's use	—	—	I32	—	—	—	—	—
4F83h	00h	External scale communication error count (accumulated)	time	0 - 65535	U16	ro	TxPDO	ALL	No	X
4F84h	00h	External scale communication data error count (accumulated)	time	0 - 65535	U16	ro	TxPDO	ALL	No	X
4F85h	00h	For manufacturer's use	—	—	I32	—	—	—	—	—
4F86h *2)	00h	Hybrid deviation	command	-2147483648 - 2147483647	I32	ro	TxPDO	pp hm csp	No	X

*1) The first edition of the software version (Ver1.01) does not support TxPDO of 4F41h-01h and 4F41h-02h.
*2) The first edition of the software version (Ver1.01) does not support it.

User-specific area (4000h～4FFFh)

Index	Sub-Index	Name	Units	Range	Data Type	Access	PDO	Op-mode	EEPROM	Attribute
4F87h	00h	External scale data (Higher) *2)	pulse (External scale)	-2147483648 - 2147483647	I32	ro	TxPDO	ALL	No	X
4F88h	00h	External scale data (Lower) *2)	pulse (External scale)	-2147483648 - 2147483647	I32	ro	TxPDO	ALL	No	X
4F89h	00h	External scale status	—	0 - 65535	U16	ro	TxPDO	ALL	No	X
4F8Ah *1)	00h	External scale Z phase counter	—	0 – 65535	U16	ro	No	ALL	No	X
4FA1h	00h	Velocity command value	r/min	-2147483648 - 2147483647	I32	ro	TxPDO	ALL	No	X
4FA4h	00h	For manufacturer's use	—	—	I32	—	—	—	—	—
4FA5h	00h	Velocity internal position command	r/min	-2147483648 - 2147483647	I32	ro	TxPDO	pp hm csp	No	X
4FA6h	00h	Velocity error actual value	r/min	-2147483648 - 2147483647	I32	ro	TxPDO	pp hm csp	No	X
4FA7h *1)	00h	External scale position (Applied polarity)	pulse (External scale)	-2147483648 - 2147483647	I32	ro	TxPDO	ALL	No	X
4FA8h	00h	Positive direction torque limit value	0.05%	-2147483648 - 2147483647	I32	ro	TxPDO	ALL	No	X
4FA9h	00h	Negative direction torque limit value	0.05%	-2147483648 - 2147483647	I32	ro	TxPDO	ALL	No	X
4FABh	00h	Gain switching flag	—	-2147483648 - 2147483647	I32	ro	TxPDO	ALL	No	X
4FACh	00h	For manufacturer's use	—	—	I32	—	—	—	—	—
4FB1h	00h	Deterioration diagnosis state	—	-2147483648 - 2147483647	I32	ro	No	ALL	No	X
4FB2h	00h	Deterioration diagnosis torque command average value	0.1%	-2147483648 - 2147483647	I32	ro	No	ALL	No	X
4FB3h	00h	Deterioration diagnosis torque command standard value	0.1%	-2147483648 - 2147483647	I32	ro	No	ALL	No	X
4FB4h	00h	Deterioration diagnosis inertia ratio estimate value	%	-2147483648 - 2147483647	I32	ro	No	ALL	No	X
4FB5h	00h	Deterioration diagnosis offset load estimate value	0.1%	-2147483648 - 2147483647	I32	ro	No	ALL	No	X
4FB6h	00h	Deterioration diagnosis dynamic friction estimate value	0.1%	-2147483648 - 2147483647	I32	ro	No	ALL	No	X
4FB7h	00h	Deterioration diagnosis viscous friction estimate value	0.1%/ (10000r/min)	-2147483648 - 2147483647	I32	ro	No	ALL	No	X
4FF5h	00h	For manufacturer's use	—	—	I32	—	—	—	—	—
4FF6h	00h	For manufacturer's use	—	—	I32	—	—	—	—	—
4FF7h	-	For manufacturer's use	—	—	—	—	—	—	—	—
	00h	Number of entries	—	2 - 2	U8	ro	No	ALL	No	X
	01h	For manufacturer's use	—	—	I32	—	—	—	—	—
	02h	For manufacturer's use	—	—	I32	—	—	—	—	—
4FF8h	-	For manufacturer's use	—	—	—	—	—	—	—	—
	00h	Number of entries	—	2 - 2	U8	ro	No	ALL	No	X
	01h	For manufacturer's use	—	—	I32	—	—	—	—	—
	02h	For manufacturer's use	—	—	I32	—	—	—	—	—
4FFDh	00h	For manufacturer's use	—	-2147483648 - 2147483647	I32	ro	TxPDO	ALL	No	X

*1) The first edition of the software version (Ver1.01) does not support it.
*2) The title is different from that in the first edition of the software version (Ver1.01).

Drive profile area (6000h to 6FFFh)

Index	Sub-Index	Name	Units	Range	Data Type	Access	PDO	Op-mode	EEPROM	Attribute
6007h	00h	Abort connection option code	-	0 – 3	I16	rw	No	ALL	Yes	A
603Fh	00h	Error code	-	0 – 65535	U16	ro	TxPDO	ALL	No	X
6040h	00h	Controlword	-	0 – 65535	U16	rw	RxPDO	ALL	No	A
6041h	00h	Statusword	-	0 – 65535	U16	ro	TxPDO	ALL	No	X
605Ah	00h	Quick stop option code	-	-2 – 7	I16	rw	No	ALL	Yes	A
605Bh	00h	Shutdown option code	-	0 – 1	I16	rw	No	ALL	Yes	A
605Ch	00h	Disable operation option code	-	0 – 1	I16	rw	No	ALL	Yes	A
605Dh	00h	Halt option code	-	1 – 3	I16	rw	No	ALL	Yes	A
605Eh	00h	Fault reaction option code	-	0 – 2	I16	rw	No	ALL	Yes	A
6060h	00h	Modes of operation	-	-128 – 127	I8	rw	RxPDO	ALL	Yes	A
6061h	00h	Modes of operation display	-	-128 – 127	I8	ro	TxPDO	ALL	No	X
6062h	00h	Position demand value	command	-2147483648 – 2147483647	I32	ro	TxPDO	pp hm ip csp	No	X
6063h	00h	Position actual internal value	pulse	-2147483648 – 2147483647	I32	ro	TxPDO	ALL	No	X
6064h	00h	Position actual value	command	-2147483648 – 2147483647	I32	ro	TxPDO	ALL	No	X
6065h	00h	Following error window	command	0 – 4294967295	U32	rw	RxPDO	pp csp	Yes	A
6066h	00h	Following error time out	1ms	0 – 65535	U16	rw	RxPDO	pp csp	Yes	A
6067h	00h	Position window	command	0 – 4294967295	U32	rw	RxPDO	pp ip	Yes	A
6068h	00h	Position window time	1ms	0 – 65535	U16	rw	RxPDO	pp ip	Yes	A
6069h	00h	Velocity sensor actual value	-	-2147483648 – 2147483647	I32	ro	TxPDO	ALL	No	X
606Ah	00h	Sensor selection code	-	-32768 – 32767	I16	ro	RxPDO	pv	No	X
606Bh	00h	Velocity demand value	command/s	-2147483648 – 2147483647	I32	ro	TxPDO	pv csv	No	X
606Ch	00h	Velocity actual value	command/s	-2147483648 – 2147483647	I32	ro	TxPDO	ALL	No	X
606Dh	00h	Velocity window	command/s	0 – 65535	U16	rw	RxPDO	pv	Yes	A
606Eh	00h	Velocity window time	1ms	0 – 65535	U16	rw	RxPDO	pv	Yes	A
606Fh	00h	Velocity threshold	command/s	0 – 65535	U16	rw	RxPDO	pv	Yes	A
6070h	00h	Velocity threshold time	1ms	0 – 65535	U16	rw	RxPDO	pv	Yes	A
6071h	00h	Target torque	0.1%	-32768 – 32767	I16	rw	RxPDO	tq cst	Yes	A
6072h	00h	Max torque	0.1%	0 – 65535	U16	rw	RxPDO	ALL	Yes	A
6073h	00h	Max current	0.1%	0 – 65535	U16	ro	No	tq	No	X
6074h	00h	Torque demand	0.1%	-32768 – 32767	I16	ro	TxPDO	ALL	No	X
6075h	00h	Motor rated current	mA	0 – 4294967295	U32	ro	No	ALL	No	X
6076h	00h	Motor rated torque	mN･m	0 – 4294967295	U32	ro	No	ALL	No	X
6077h	00h	Torque actual value	0.1%	-32768 – 32767	I16	ro	TxPDO	ALL	No	X
6078h	00h	Current actual value	0.1%	-32768 – 32767	I16	ro	TxPDO	ALL	No	X
6079h	00h	DC link circuit voltage	mV	0 – 4294967295	U32	ro	TxPDO	ALL	No	X
607Ah	00h	Target position	command	-2147483648 – 2147483647	I32	rw	RxPDO	pp csp	No	A
607Bh	-	Position range limit	-	-	-	-	-	ALL	-	-
	00h	Highest sub-index supported	-	2	U8	ro	No		No	X
	01h	Min position range limit	command	-2147483648 – 2147483647	I32	rw	RxPDO		Yes	X
	02h	Max position range limit	command	-2147483648 – 2147483647	I32	rw	RxPDO		Yes	X
607Ch	00h	Home offset	command	-2147483648 – 2147483647	I32	rw	RxPDO	ALL	Yes	P,H

Drive profile area (6000h to 6FFFh)

Index	Sub-Index	Name	Units	Range	Data Type	Access	PDO	Op-mode	EEPROM	Attribute
607Dh	-	Software position limit	-	-	-	-	-	pp ip csp	-	-
	00h	Number of entries	-	2	U8	ro	No		No	X
	01h	Min position limit	command	-2147483648 – 2147483647	I32	rw	RxPDO		Yes	P,H
	02h	Max position limit	command	-2147483648 – 2147483647	I32	rw	RxPDO		Yes	P,H
607Eh	00h	Polarity	-	0 – 255	U8	rw	No	ALL	Yes	P,H
607Fh	00h	Max profile velocity	command/s	0 – 4294967295	U32	rw	RxPDO	pp hm ip pv	Yes	B
6080h	00h	Max motor speed	r/min	0 – 4294967295	U32	rw	RxPDO	ALL	Yes *1)	B
6081h	00h	Profile velocity	command/s	0 – 4294967295	U32	rw	RxPDO	pp ip	Yes	A
6082h	00h	End velocity	command/s	0 – 4294967295	U32	rw	RxPDO	pp ip	Yes	X
6083h	00h	Profile acceleration	command/s^2	0 – 4294967295	U32	rw	RxPDO	pp pv ip	Yes	A
6084h	00h	Profile deceleration	command/s^2	0 – 4294967295	U32	rw	RxPDO	pp pv hm ip csp csv	Yes	A
6085h	00h	Quick stop deceleration	command/s^2	0 – 4294967295	U32	rw	RxPDO	pp pv hm ip csp csv	Yes	A
6086h	00h	Motion profile type	-	-32768 – 32767	I16	rw	RxPDO	pp pv ip	Yes	A
6087h	00h	Torque slope	0.1%/s	0 – 4294967295	U32	rw	RxPDO	tq cst	Yes	A
6088h	00h	Torque profile type	-	-32768 – 32767	I16	rw	RxPDO	tq	Yes	A
608Fh	-	Position encoder resolution	-	-	-	-	-	ALL	-	-
	00h	Highest sub-index supported	-	2	U8	ro	No		No	X
	01h	Encoder increments	pulse	1 – 4294967295	U32	ro	No		No	X
	02h	Motor revolutions	r (motor)	1 – 4294967295	U32	ro	No		No	X
6091h	-	Gear ratio	-	-	-	-	-	ALL	-	-
	00h	Number of entries	-	2	U8	ro	No		No	X
	01h	Motor revolutions	r (motor)	1 – 4294967295	U32	rw	No		Yes	P,H
	02h	Shaft revolutions	r (shaft)	1 – 4294967295	U32	rw	No		Yes	P,H
6092h		Feed constant	-	-	-	-	-	ALL	-	
	00h	Highest sub-index supported	-	2	U8	ro	No		No	X
	01h	Feed	command	1 – 4294967295	U32	rw	No		Yes	P,H
	02h	Shaft revolutions	r (shaft)	1 – 4294967295	U32	rw	No		Yes	P,H
6098h	00h	Homing method	-	-128 – 127	I8	rw	RxPDO	hm	Yes	B
6099h	-	Homing speeds	-	-	-	-	-	hm	-	-
	00h	Number of entries	-	2	U8	ro	No		No	X
	01h	Speed during search for switch	command/s	0 – 4294967295	U32	rw	RxPDO		Yes	A
	02h	Speed during search for zero	command/s	0 – 4294967295	U32	rw	RxPDO		Yes	A
609Ah	00h	Homing acceleration	command/s^2	0 – 4294967295	U32	rw	RxPDO	hm	Yes	A

*1) The first edition of the software version (Ver1.01) does not support EEPROM.

Drive profile area (6000h to 6FFFh)

Index	Sub-Index	Name	Units	Range	Data Type	Access	PDO	Op-mode	EEPROM	Attribute
60A3h	00h	Profile jerk use	-	1 - 2 , 255	U8	rw	No	pp pv ip	Yes	A
60A4h	-	Profile jerk	-	-	-	-	-	pp pv ip	-	-
	00h	Highest sub-index supported	-	2	U8	ro	No		No	X
	01h	Profile jerk1	command/s^3	0 – 4294967295	U32	rw	No		Yes	A
	02h	Profile jerk2	command/s^3	0 – 4294967295	U32	rw	No		Yes	A
60B0h	00h	Position offset	command	-2147483648 – 2147483647	I32	rw	RxPDO	csp	Yes	A
60B1h	00h	Velocity offset	command/s	-2147483648 – 2147483647	I32	rw	RxPDO	pp pv hm ip csp csv	Yes	A
60B2h	00h	Torque offset	0.1%	-32768 – 32767	I16	rw	RxPDO	ALL	Yes	A
60B8h	00h	Touch probe function	-	0 – 65535	U16	rw	RxPDO	ALL	No	A
60B9h	00h	Touch probe status	-	0 – 65535	U16	ro	TxPDO	ALL	No	X
60BAh	00h	Touch probe pos1 pos value	command	-2147483648 – 2147483647	I32	ro	TxPDO	ALL	No	X
60BBh	00h	Touch probe pos1 neg value	command	-2147483648 – 2147483647	I32	ro	TxPDO	ALL	No	X
60BCh	00h	Touch probe pos2 pos value	command	-2147483648 – 2147483647	I32	ro	TxPDO	ALL	No	X
60BDh	00h	Touch probe pos2 neg value	command	-2147483648 – 2147483647	I32	ro	TxPDO	ALL	No	X
60C2h	-	Interpolation time period	-	-	-	-	-	ip csp csv cst	-	-
	00h	Highest sub-index supported	-	2	U8	ro	No		No	X
	01h	Interpolation time period value	-	0 - 255	U8	rw	No		Yes	A
	02h	Interpolation time index	-	-128 – 63	I8	rw	No		Yes	A
60C5h	00h	Max acceleration	command/s^2	0 – 4294967295	U32	rw	RxPDO	pp hm pv ip	Yes	A
60C6h	00h	Max deceleration	command/s^2	0 – 4294967295	U32	rw	RxPDO	pp hm pv ip	Yes	A

Drive profile area (6000h to 6FFFh)

Index	Sub-Index	Name	Units	Range	Data Type	Access	PDO	Op-mode	EEPROM	Attribute
60E3h	-	Supported homing method	-	-	-	-	-	ALL	-	-
	00h	Number of entries	-	32	U8	ro	No		No	X
	01h	1st supported homing method	-	0 – 32767	U16	ro	No		No	X
		:							:	
	20h	32nd supported homing method	-	0 – 32767	U16	ro	No		No	X
60F2h	00h	Positioning option code	-	0 – 32767	U16	rw	RxPDO	pp	Yes	A
60F4h	00h	Following error actual value	command	-2147483648 – 2147483647	I32	ro	TxPDO	pp hm ip csp	No	X
60FAh	00h	Control effort	command/s	-2147483648 – 2147483647	I32	ro	TxPDO	pp hm ip csp	No	X
60FCh	00h	Position demand internal value	pulse	-2147483648 – 2147483647	I32	ro	TxPDO	pp hm ip csp	No	X
60FDh	00h	Digital inputs	-	0 – 4294967295	U32	ro	TxPDO	ALL	No	X
60FEh	-	Digital outputs	-	-	-	-	-	ALL	-	-
	00h	Number of entries	-	2	U8	ro	No		No	X
	01h	Physical outputs	-	0 – 4294967295	U32	rw	RxPDO		Yes	A
	02h	Bit mask	-	0 – 4294967295	U32	rw	RxPDO		Yes	A
60FFh	00h	Target velocity	command/s	-2147483648 – 2147483647	I32	rw	RxPDO	pv csv	No	A
6403h	00h	Motor catalogue number	-	-	VS	ro	No	ALL	No	X
6502h	00h	Supported drive modes	-	0 – 4294967295	U32	ro	TxPDO	ALL	No	X

10 Glossary of Terms

Term/abbreviation	Description
AL	Application Layer
CSP,csp	Cyclic Synchronous Position (profile)
CSV,csv	Cyclic Synchronous Velocity
CST,cst	Cyclic Synchronous Torque
DC	Distributed Clocks
ESC	EtherCAT Slave Controller
ESM	EtherCAT State Machine
FG	Function Group
HM,hm	Homing Mode
MBX	Mailbox
PDO	Process Data Object
PDS	Power Drive Systems
PP,pp	Profile Position
RxPDO	Receive PDO
SM	SyncManager
TxPDO	Transmit PDO
WDT	Watchdog Timer
nma	No Mode Assigned
ms	manufacturer-specific (Controlword 6040h)
oms	operation mode specific (Controlword 6040h)
eo	enable operation (Controlword 6040h)
r	reserved (Controlword 6040h)
qs	quick stop (Controlword 6040h)
ev	enable voltage (Controlword 6040h)
h	halt (Controlword 6040h)
so	switch on (Controlword 6040h)
fr	fault reset (Controlword 6040h)
RW	Read-Write
rw	read-write
ro	read-only
c	constant
Alarm	Error
Warning	Warning
Yes	Supported (or condition met)
No	Not supported (or condition not met)
-	Not applicable (or out of scope)

Data Type	
U8	Unsigned8
U16	Unsigned16
U32	Unsigned32
Int8	Integer8
Int16	Integer16
Int32	Integer32
VS	Visible String
BOOL	Boolean
OS	Octet String