Compact Inductive Proximity Sensor **Amplifier-separated**

GA-311 GH SERIES

Related Information
■ General terms and conditions..... F-3
■ Glossary of terms..... P.1576~
■ Selection guide ..... P.781~
■ General precautions ..... P.1579~

panasonic.net/id/pidsx/global

Recognition

Self-diagnosis | Oil resistant | Metal embedding possible | With adjuster

High-speed response and excellent workability

Suitable for high-speed applications

It has a high performance of 3.3 kHz response frequency. These sensors are ideal for sensing objects moving at high speeds.

IP67G sensor head variations

The lineup includes 5 different models, from an ultra-compact 2.8 mm 0.110 in diameter type to a spatter-resistant type. Furthermore, all except for the **GH-2SE** are IP67G oil-resistant models so that they can be used with confidence even in adverse environments.

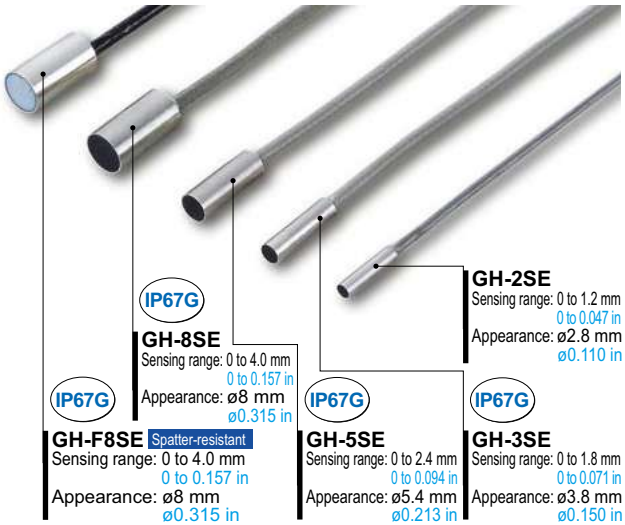

APPLICATIONS

Detecting small metal parts

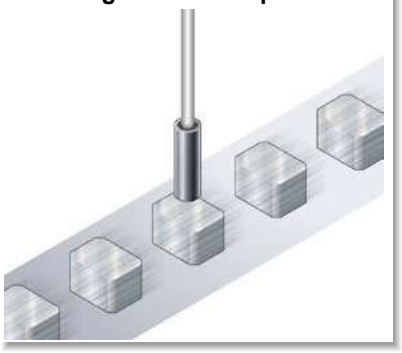

Detecting rotation of a gear

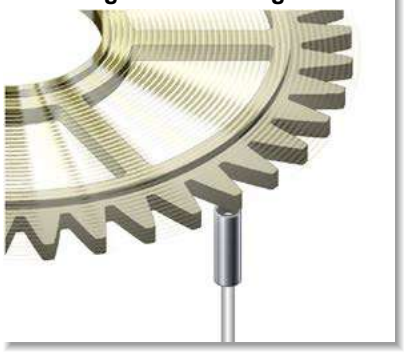

MOUNTING / MAINTENANCE

Excellent workability and ease of maintenance

They all have the same form as the **FX-300** series of fiber sensors. The quick-connection cables are also of the same shape, so that fiber sensors and laser sensors can all be used together and less power supply wiring is required.

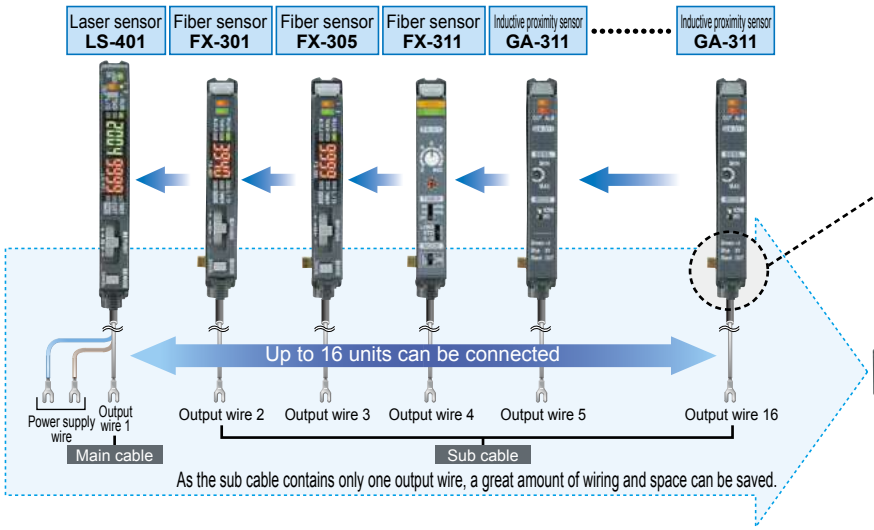

Quick-connection cables can be used for power supply cascade wiring. Both main and sub units utilize the same amplifier body.

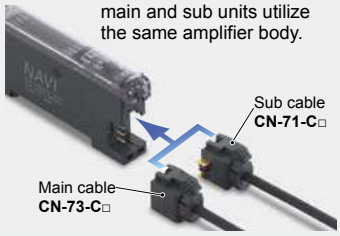

Even less wiring is possible by using the **CN-70** non-line connectors!

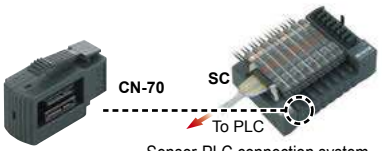

Sensor-PLC connection system **SC** series (Refer to p.987~)

Up to 16 sensors can be connected together at once using a MIL connector.

Labor-saving by one-touch connections

The connection between the sensor head and the amplifier is made using a quick-connection connector. Past troublesome wiring connections using a screwdriver are no longer necessary.

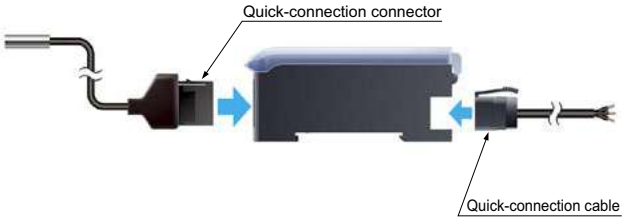

FUNCTIONS

Disconnection alarm indicator and operation indicator have been incorporated

Operation indicator
Lights up orange when the output is on.

Multi-turn potentiometer
An 18-turn potentiometer with a wide adjustment range is used, so that even fine adjustments are possible.

Disconnection alarm indicator
Lights up red if a problem such as a disconnected sensor head cable or a poor connector connection occurs.

ORDER GUIDE

Sensor heads

Type	Appearance (mm in)	Sensing range (Note)	Model No.	Hysteresis
Cylindrical type	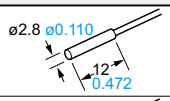	1.2 mm 0.047 in (Maximum operation distance) (0 to 0.6 mm 0 to 0.024 in) (Stable sensing range)	**GH-2SE**	0.07 mm 0.0028 in or less
	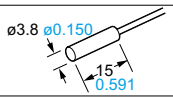	1.8 mm 0.071 in (0 to 0.8 mm 0 to 0.031 in)	**GH-3SE**	0.05 mm 0.0020 in or less
	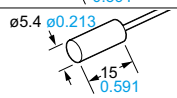	2.4 mm 0.094 in (0 to 1.0 mm 0 to 0.039 in)	**GH-5SE**	
Spatter-resistant type	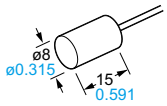	4.0 mm 0.157 in (0 to 2.0 mm 0 to 0.079 in)	**GH-8SE**	0.04 mm 0.0016 in or less
			GH-F8SE	

Note: The stable sensing range represents the sensing range for which the sensor can satisfy all the given specifications with the standard sensing object.
The maximum operation distance represents the maximum distance for which the sensor can detect the standard sensing object at +20 °C +68 °F constant ambient temperature.
Usage within the stable sensing range is recommended for accurate sensing applications.

Amplifier

Quick-connection cable is not supplied with the amplifier. Please order it separately.

Type	Appearance	Model No.	Output
Connector type	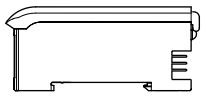	**GA-311**	NPN open-collector transistor

Quick-connection cable

Quick-connection cable is not supplied with the amplifier. Please order it separately.

Type	Model No.	Description	
Main cable (3-core)	**CN-73-C1**	Length: 1 m 3.281 ft	0.2 mm² 3-core cabtyre cable, with connector on one end Cable outer diameter: ø3.3 mm ø0.130 in
	CN-73-C2	Length: 2 m 6.562 ft	
	CN-73-C5	Length: 5 m 16.404 ft	
Sub cable (1-core)	**CN-71-C1**	Length: 1 m 3.281 ft	0.2 mm² 1-core cabtyre cable, with connector on one end Cable outer diameter: ø3.3 mm ø0.130 in
	CN-71-C2	Length: 2 m 6.562 ft	
	CN-71-C5	Length: 5 m 16.404 ft	

Main cable

• **CN-73-C□**

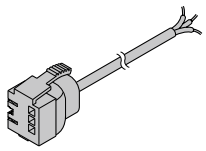

Sub cable

• **CN-71-C□**

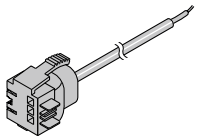

End plates

End plates are not supplied with the amplifier. Please order them separately when the amplifiers are mounted in cascade.

Appearance	Model No.	Description
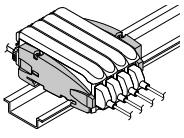	**MS-DIN-E**	When cascading multiple amplifiers, or when it moves depending on the way it is installed on a DIN rail, these end plates clamp amplifiers into place on both sides. Make sure to use end plates when cascading multiple amplifiers together. 2 pcs. per set

OPTIONS

Designation	Model No.	Description
Amplifier mounting bracket	**MS-DIN-2**	Mounting bracket for amplifier
Sensor head mounting bracket	**MS-SS3**	Mounting bracket for **GH-3SE**
	MS-SS5	Mounting bracket for **GH-5SE**
	MS-SS8	Mounting bracket for **GH-8SE**

Amplifier mounting bracket

• **MS-DIN-2**

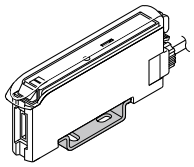

Sensor head mounting bracket

• **MS-SS□**

The sensor head can be easily fixed.

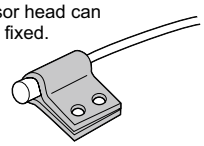

SPECIFICATIONS

Sensor heads

Item \ Type	Model No.	Cylindrical type				Spatter-resistant type
		GH-2SE	**GH-3SE**	**GH-5SE**	**GH-8SE**	**GH-F8SE**
Applicable amplifier		**GA-311**				
Stable sensing range (Note 2)		0 to 0.6 mm 0 to 0.024 in	0 to 0.8 mm 0 to 0.031 in	0 to 1.0 mm 0 to 0.039 in	0 to 2.0 mm 0 to 0.079 in	
Max. operation distance (Note 2)		1.2 mm 0.047 in	1.8 mm 0.071 in	2.4 mm 0.094 in	4.0 mm 0.157 in	
Standard sensing object		Iron sheet 5 × 5 × t 1 mm 0.197 × 0.197 × t 0.039 in			Iron sheet 10 × 10 × t 1 mm 0.394 × 0.394 × t 0.039 in	
Hysteresis (Note 3)		0.07 mm 0.003 in or less	0.05 mm 0.002 in or less		0.04 mm 0.002 in or less	
Repeatability (Note 3)		Along sensing axis, perpendicular to sensing axis: 1 µm 0.039 mil or less				
Environmental resistance	Protection	IP50 (IEC)	IP67 (IEC), IP67G (Note 4)			
	Ambient temperature	–10 to +60 °C 14 to +140 °F, Storage: –20 to +70 °C –4 to +158 °F				
	Ambient humidity	35 to 85 % RH, Storage: 35 to 85 % RH				
	Vibration resistance	10 to 55 Hz frequency, 1.5 mm 0.059 in double amplitude in X, Y and Z directions for two hours each				
	Shock resistance	500 m/s² acceleration (50 G approx.) in X, Y and Z directions five times each				
Temperature characteristics (Note 5)		Within ±7 %	Within ±5 %	Within ±4 %		
Material		Enclosure: Stainless steel (SUS303) Sensing part: PVC	Enclosure: Stainless steel (SUS303) Sensing part: ABS	Enclosure: Stainless steel (SUS303) Sensing part: PAR	Enclosure: Stainless steel (SUS303) Sensing part: ABS	Enclosure: Stainless steel (SUS303) Sensing part: Fluorine resin
Cable (Note 6)		Oil-resistant [Spatter-resistant type: Spatter-resistant cable (Sheath: Fluorine resin)] high-frequency coaxial cable, 3 m 9.843 ft long, with a connector at the end				
Weight		Net weight: 15 g approx. Gross weight: 30 g approx.	Net weight: 35 g approx. Gross weight: 45 g approx.		Net weight: 40 g approx. Gross weight: 55 g approx.	Net weight: 55 g approx. Gross weight: 70 g approx.

Notes: 1) Where measurement conditions have not been specified precisely, the conditions used were an ambient temperature of +23 °C +73.4 °F.
2) The stable sensing range represents the sensing range for which the sensor can satisfy all the given specifications with the standard sensing object. The maximum operation distance represents the maximum distance for which the sensor can detect the standard sensing object at +20 °C +68 °F constant ambient temperature.
Usage within the stable sensing range is recommended for accurate sensing applications.
3) The hysteresis and the repeatability are specified for the standard sensing object within the stable sensing range.
4) If using the sensor in an environment where cutting oil droplets splatter, the sensor may be deteriorated due to added substances in the oil. Please check the resistivity of the sensor against the cutting oil you are using beforehand.
5) The value represents the variation in the operation distance, that has been set within the stable sensing range at +20 °C +68 °F, for an ambient temperature drift from 0 to +55 °C +32 to +131 °F. (Values are for sensor head only.)
6) The length of the sensor head cable cannot be changed.

SPECIFICATIONS

Amplifier

Item \ Model No.		GA-311
Applicable sensor head		**GH-□SE**
Supply voltage		12 to 24 V DC ±10 % Ripple P-P 10 % or less
Current consumption		25 mA or less
Output		NPN open-collector transistor • Maximum sink current: 100 mA (50 mA, if five, or more, amplifiers are connected in cascade.) • Applied voltage: 30 V DC or less (between sensing output and 0 V) • Residual voltage: 1 V or less [at 100 mA (at 50 mA, if five, or more, amplifiers are connected in cascade) sink current.]
	Output operation	Switchable either Normally open or Normally closed
	Short-circuit protection	Incorporated
Max. response frequency		3.3 kHz
Operation indicator		Orange LED (lights up when the output is ON)
Disconnection alarm indicator		Red LED (lights up when the sensor head cable is disconnected or misconnected)
Sensitivity adjuster		18-turn potentiometer
Environmental resistance	Ambient temperature	–10 to +60 °C +14 to +140 °F (If 4 to 7 units are connected in cascade: –10 to +50 °C +14 to +122 °F, if 8 to 16 units are connected in cascade: –10 to +45 °C +14 to +113 °F) (No dew condensation or icing allowed), Storage: –20 to +70 °C –4 to +158 °F
	Ambient humidity	35 to 85 % RH, Storage: 35 to 85 % RH
	Voltage withstandability	1,000 V AC for one min. between all supply terminals connected together and enclosure
	Insulation resistance	20 MΩ, or more, with 250 V DC megger between all supply terminals connected together and enclosure
	Vibration resistance	10 to 150 Hz frequency, 0.75 mm 0.030 in double amplitude in X, Y and Z directions for two hours each
	Shock resistance	100 m/s^2 acceleration (10 G approx.) in X, Y and Z directions three times each
Temperature characteristics (Note 2)		Within ±5 %
Material		Enclosure: PBT, Cover: Polycarbonate
Connecting method		Connector (Note 3)
Cable length		Total length up to 100 m 328.084 ft (if 5 to 8 units are connected in cascade: 50 m 164.042 ft, if 9 to 16 units are connected in cascade: 20 m 65.617 ft) is possible with 0.3 mm^2, or more, cable.
Weight		Net weight: 15 g approx., Gross weight: 40 g approx.

Notes: 1) Where measurement conditions have not been specified precisely, the conditions used were an ambient temperature of +23 °C +73.4 °F.
2) The value of the temperature characteristics gives the variation in the operation distance, that has been set within the stable sensing range at +20 °C +68 °F, for an ambient temperature drift from 0 to +55 °C +32 to +131 °F. (Value is for amplifier only.)
3) The cable for amplifier connection is not supplied as an accessory. Make sure to use the optional quick-connection cable given below.
Main cable (3-core): **CN-73-C1** (cable length 1 m 3.281 ft), **CN-73-C2** (cable length 2 m 6.562 ft), **CN-73-C5** (cable length 5 m 16.404 ft)
Sub cable (1-core): **CN-71-C1** (cable length 1 m 3.281 ft), **CN-71-C2** (cable length 2 m 6.562 ft), **CN-71-C5** (cable length 5 m 16.404 ft)

I/O CIRCUIT AND WIRING DIAGRAMS

I/O circuit diagram

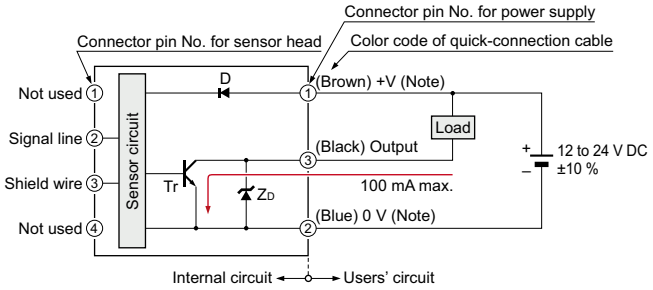

Note: The quick-connection sub cable does not have +V (brown) and 0 V (blue). The power is supplied from the connector of the main cable.

Symbols … D : Reverse supply polarity protection diode
ZD: Surge absorption zener diode
Tr : NPN output transistor

Wiring diagram

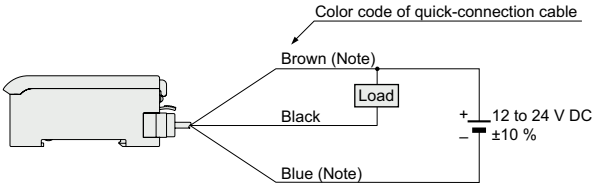

Note: The quick-connection sub cable does not have brown lead wire and blue lead wire.

Connector pin position

Connector for sensor head

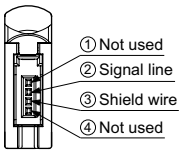

Connector for power supply

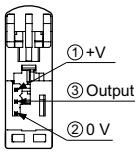

SENSING CHARACTERISTICS (TYPICAL)

GH-2SE

Sensing field

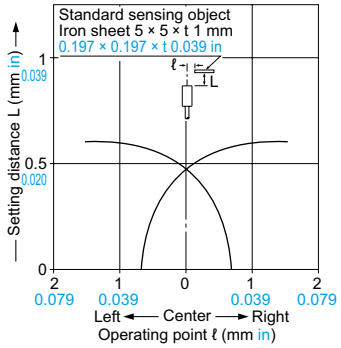

The graph on the left is plotted with the sensitivity adjusted so as to just detect a 5 × 5 × t 1 mm 0.197 × 0.197 × t 0.039 in iron sheet placed at a distance of 0.6 mm 0.024 in.

Correlation between sensing object size and sensing range

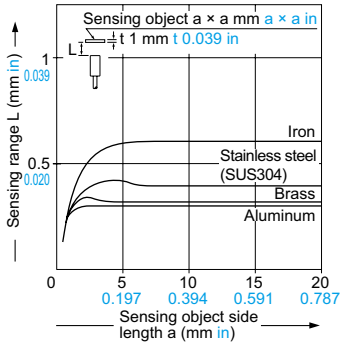

As the sensing object size becomes smaller than the standard size (iron sheet 5 × 5 × t 1 mm 0.197 × 0.197 × t 0.039 in), the sensing range shortens as shown in the left figure.

The graph on the left is plotted with the sensitivity adjusted so as to just detect a 5 × 5 × t 1 mm 0.197 × 0.197 × t 0.039 in iron sheet placed at a distance of 0.6 mm 0.024 in.

GH-3SE

Sensing field

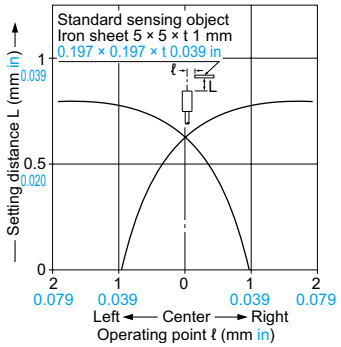

The graph on the left is plotted with the sensitivity adjusted so as to just detect a 5 × 5 × t 1 mm 0.197 × 0.197 × t 0.039 in iron sheet placed at a distance of 0.8 mm 0.031 in.

Correlation between sensing object size and sensing range

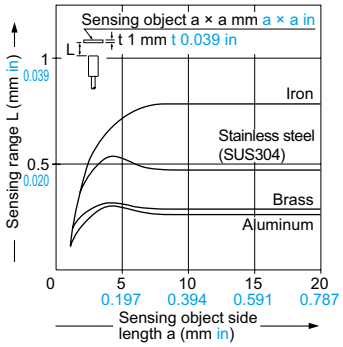

As the sensing object size becomes smaller than the standard size (iron sheet 5 × 5 × t 1 mm 0.197 × 0.197 × t 0.039 in), the sensing range shortens as shown in the left figure.

The graph on the left is plotted with the sensitivity adjusted so as to just detect a 5 × 5 × t 1 mm 0.197 × 0.197 × t 0.039 in iron sheet placed at a distance of 0.8 mm 0.031 in.

GH-5SE

Sensing field

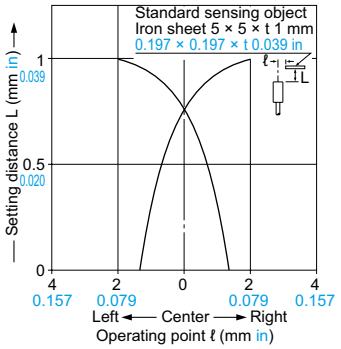

The graph on the left is plotted with the sensitivity adjusted so as to just detect a 5 × 5 × t 1 mm 0.197 × 0.197 × t 0.039 in iron sheet placed at a distance of 1.0 mm 0.039 in.

Correlation between sensing object size and sensing range

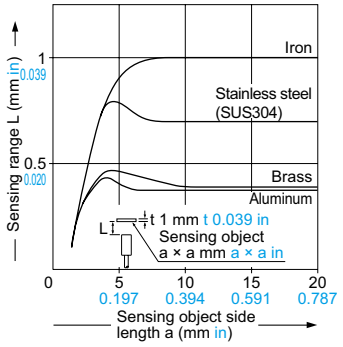

As the sensing object size becomes smaller than the standard size (iron sheet 5 × 5 × t 1 mm 0.197 × 0.197 × t 0.039 in), the sensing range shortens as shown in the left figure.

The graph on the left is plotted with the sensitivity adjusted so as to just detect a 5 × 5 × t 1 mm 0.197 × 0.197 × t 0.039 in iron sheet placed at a distance of 1.0 mm 0.039 in.

GH-8SE GH-F8SE

Sensing field

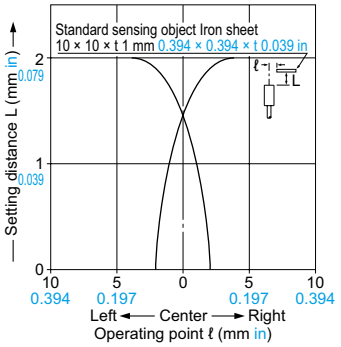

The graph on the left is plotted with the sensitivity adjusted so as to just detect a 10 × 10 × t 1 mm 0.394 × 0.394 × t 0.039 in iron sheet placed at a distance of 2.0 mm 0.079 in.

Correlation between sensing object size and sensing range

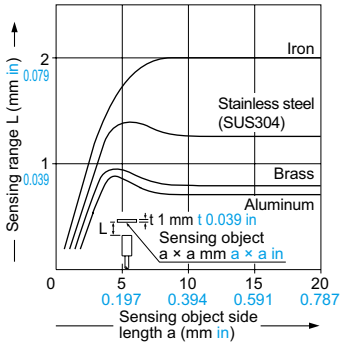

As the sensing object size becomes smaller than the standard size (iron sheet 10 × 10 × t 1 mm 0.394 × 0.394 × t 0.039 in), the sensing range shortens as shown in the left figure.

The graph on the left is plotted with the sensitivity adjusted so as to just detect a 10 × 10 × t 1 mm 0.394 × 0.394 × t 0.039 in iron sheet placed at a distance of 2.0 mm 0.079 in.

PRECAUTIONS FOR PROPER USE

Refer to p.1579~ for general precautions.

- Never use this product as a sensing device for personnel protection.
- In case of using sensing devices for personnel protection, use products which meet laws and standards, such as OSHA, ANSI or IEC etc., for personnel protection applicable in each region or country.

- Always be sure to use sensor heads and amplifiers from the same set.
- Do not shorten or lengthen the sensor head cable.

Mounting of the sensor head

How to mount the sensor head

- The tightening torque should be as given below. Make sure to use a set screw with a cup-point end.

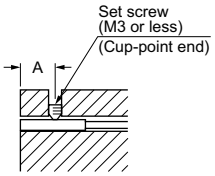

Model No.	Tightening torque	A (mm in)
GH-2SE	0.17N·m	3 0.118 or more
GH-3SE	0.17N·m	4 0.157 or more
GH-5SE	0.78N·m	5 0.197 or more
GH-8SE GH-F8SE	0.59N·m	5 0.197 or more

Note: Do not tighten excessively.

Distance from surrounding metal

- If there is a metal near the sensor head, it may affect the sensing performance. Keep the minimum distance specified in the table below.

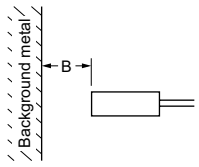

Model No.	B (mm in)
GH-2SE	3 0.118
GH-3SE	4 0.157
GH-5SE	5 0.197
GH-8SE GH-F8SE	9 0.354

Mutual interference

- When two or more sensors are installed in parallel or face to face, keep the minimum separation distance specified below to avoid mutual interference.

<Face to face mounting> <Parallel mounting>

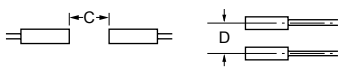

Model No.	C (mm in)	D (mm in)
GH-2SE	15 0.591	10 0.394
GH-3SE	20 0.787	15 0.591
GH-5SE	25 0.984	20 0.787
GH-8SE GH-F8SE	40 1.575	26 1.024

Sensing range

- The sensing range is specified for the standard sensing object. With a non-ferrous metal, the sensing range is obtained by multiplying with the correction coefficient specified below. Further, the sensing range also changes if the sensing object is smaller than the standard sensing object or if the sensing object is plated.

Correction coefficient

Metal \ Model No.	GH-2SE	GH-3SE	GH-5SE	GH-8SE GH-F8SE
Iron	1	1	1	1
Stainless steel (SUS304)	0.68 approx.	0.55 approx.	0.69 approx.	0.64 approx.
Brass	0.53 approx.	0.35 approx.	0.41 approx.	0.37 approx.
Aluminum	0.51 approx.	0.33 approx.	0.39 approx.	0.32 approx.

Others

- Do not use during the initial transient time (0.5 sec.) after the power supply is switched on.
- Do not use the sensor at places having intense vibrations, as this can cause malfunction.
- Make sure that stress by forcible bend or pulling is not applied directly to the cable joint of the sensor head.

DIMENSIONS (Unit: mm in)

The CAD data can be downloaded from our website.

GA-311 Amplifier

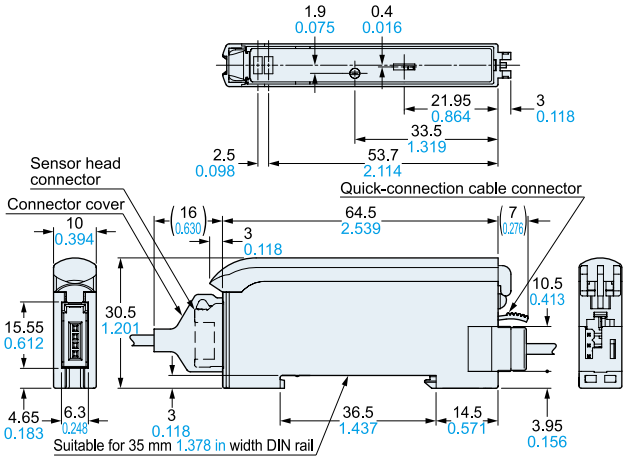

Note: The front view shows the sensor head connector and quick-connection cable connector attached.
The top view is without the sensor head connector, quick-connection cable and the cover.

GH-2SE GH-3SE GH-5SE GH-8SE GH-F8SE Sensor head

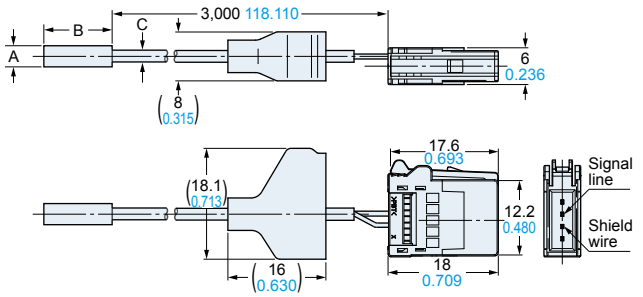

Model No.	A	B	C
GH-2SE	ø2.8 ø0.110	12 0.472	ø1.6 ø0.063
GH-3SE	ø3.8 ø0.150	15 0.591	ø2.5 ø0.098
GH-5SE	ø5.4 ø0.213	15 0.591	ø2.5 ø0.098
GH-8SE	ø8.0 ø0.315	15 0.591	ø2.5 ø0.098
GH-F8SE	ø8.0 ø0.315	15 0.591	ø2.65 ø0.104

CN-73-C1 CN-73-C2 CN-73-C5 Main cable (Optional)

• Length L

Model No.	Length L
CN-73-C1	1,000 39.370
CN-73-C2	2,000 78.740
CN-73-C5	5,000 196.850

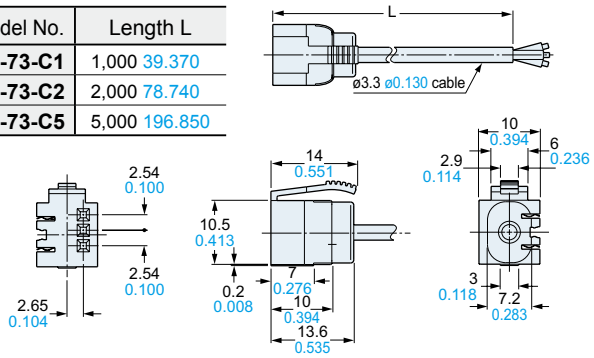

CN-71-C1 CN-71-C2 CN-71-C5 Sub cable (Optional)

• Length L

Model No.	Length L
CN-71-C1	1,000 39.370
CN-71-C2	2,000 78.740
CN-71-C5	5,000 196.850

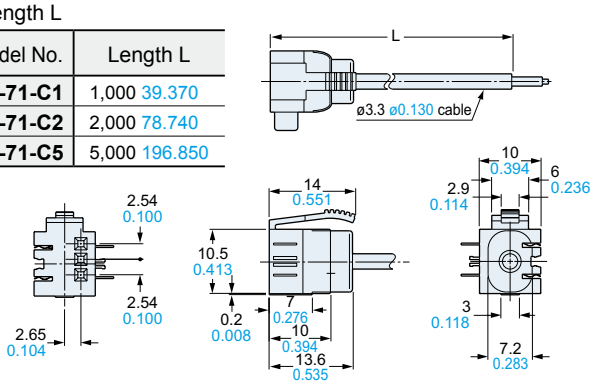

MS-DIN-2 Amplifier mounting bracket (Optional)

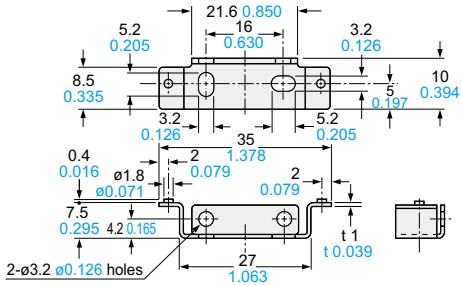

Material: Cold rolled carbon steel (SPCC) (Uni-chrome plated)

MS-DIN-E End plate (Optional)

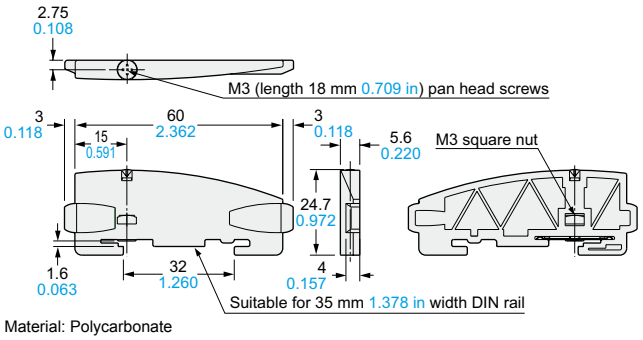

Material: Polycarbonate

MS-SS3 MS-SS5 MS-SS8 Sensor head mounting bracket (Optional)

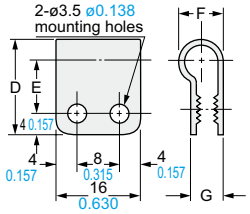

Material: Nylon 66

Symbol \ Model No.	MS-SS3	MS-SS5	MS-SS8
D	16 0.630	18 0.709	20 0.787
E	9 0.354	10 0.394	11 0.433
F	6.3 0.248	8.3 0.327	10.3 0.406
G	4.9 0.193	6.1 0.240	6.5 0.256
Applicable sensor head model No.	**GH-3SE**	**GH-5SE**	**GH-8SE**