Ultra-slim Safety Light Curtain Type 4

SF4C SERIES

Related Information
■ General terms and conditions F-3
■ SF-C13 ..... P.663~
■ General precautions P.1595
■ Selection guide ..... P.457~
■ Glossary of terms..... P.1549~
■ Korea's S-mark P.1602

Category 4 PLe SIL3

industrial.panasonic.com/ac/e

CE

Certified

Certified by NRTL

Conforming to OSHA / ANSI

Certified [SF4C-H□(J-05) only]

The control category differs depending on the configuration and wiring of the external circuit.

Machine safeguarding without sacrificing productivity

Slim size for efficient applications

Available work space is expanded from the previous model, and productivity is improved.

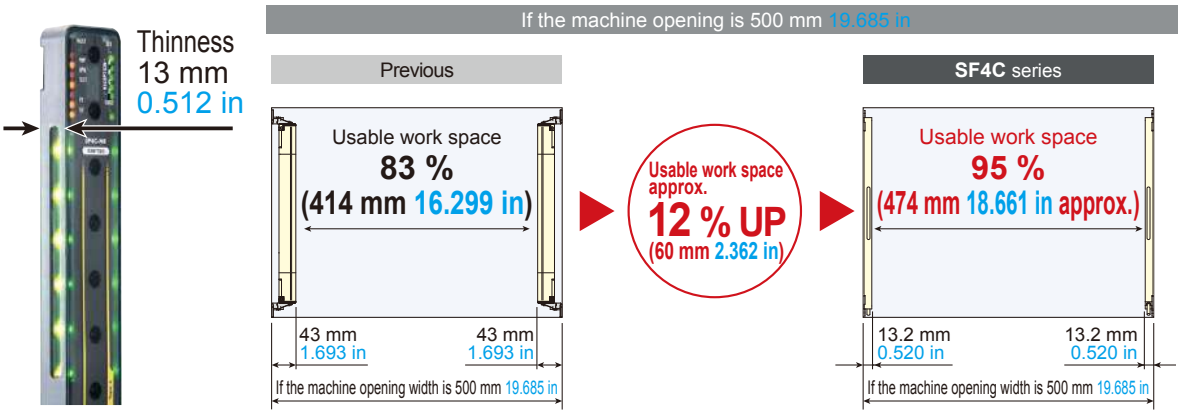

Shorter safety distance to downsize equipment Finger protection type

The safety distance of **SF4C** series finger protection type is 84 mm 3.307 in shorter than that of **SF4C** series hard protection type (**SF4C-H□**). As a result, the depth and guard of the equipment can be downsized.

SF4C series	Safety distance	
Hand protection type	102 mm 4.016 in	▶ Shortened by 84 mm 3.307 in
Finger protection type	18 mm 0.709 in	

* Calculation based on ISO 13855 with 41 ms or longer being the machinery's maximum stopping time.

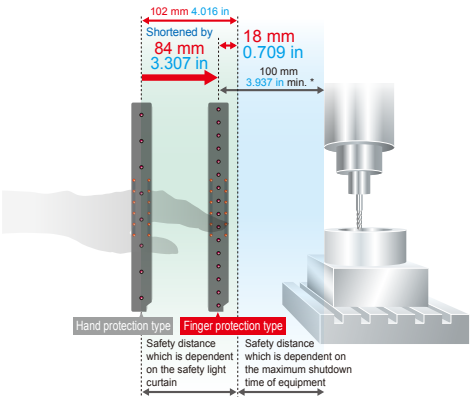

* The safety light curtain cannot be installed within a distance of 100 mm 3.937 in. (ISO 13855)

FIBER SENSORS
LASER SENSORS
PHOTOELECTRIC SENSORS
MICRO PHOTOELECTRIC SENSORS
AREA SENSORS
SAFETY LIGHT CURTAINS / SAFETY COMPONENTS
PRESSURE / FLOW SENSORS
INDUCTIVE PROXIMITY SENSORS
PARTICULAR USE SENSORS
SENSOR OPTIONS
SIMPLE WIRE-SAVING UNITS
WIRE-SAVING SYSTEMS
MEASUREMENT SENSORS
STATIC CONTROL DEVICES
LASER MARKERS
PLC
HUMAN MACHINE INTERFACES
ENERGY MANAGEMENT SOLUTIONS
FA COMPONENTS
MACHINE VISION SYSTEMS
UV CURING SYSTEMS
Selection Guide
Safety Light Curtains
Safety Control Units
Safety Components
SF4D
SF4B/ SF4B-G
SF4B-C
SF4C
BSF4-AH80
SF2B
SF2C
Definition of Sensing Heights

Can be used in a variety of applications for simplified equipment [Large multi-purpose indicator]

The bright LED indicators located in the center of both sides of each safety light curtain can be illuminated by using external inputs. There is no need for setting up a separate indicator, so that equipment is consolidated.

* The lighting conditions of **SF4C** series can be changed by using a handy-controller **SFC-HC** (optional). It is possible to actuate the lighting together with internal operation, regardless of connection of the large multi-purpose indicator input wires.

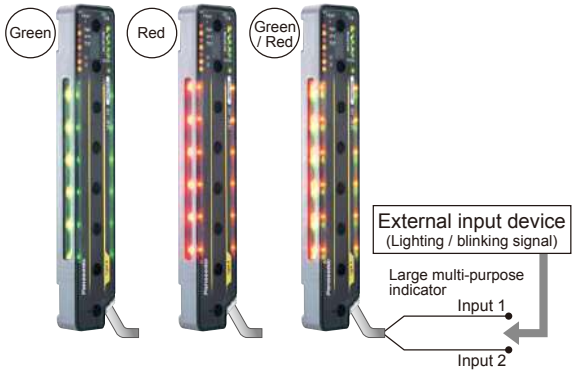

Use as an operation indicator	Use as an error indicator	Use as a muting lamp
●Solid green Equipment is operating 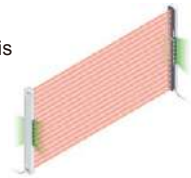 ●Solid red Emergency stop 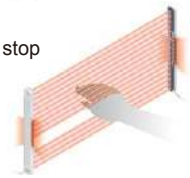	●Blinking red Error present 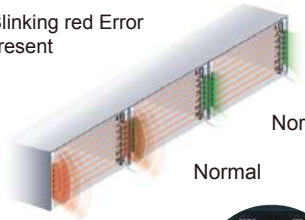 Normal Normal Error blinking  Confirm detail of error quickly on the digital display. * The photo is **SF4C-H□**. **SF4C-F□** differs in the position of digital display.	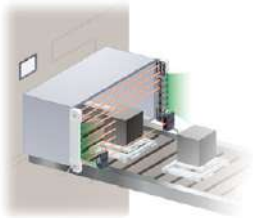 * If a failure diagnosis of muting lamp is needed as by the result of risk assessment, use the handy-controller **SFC-HC** (optional) to change the setting, and connect the muting lamp output wire (red) of this safety light curtain to an incandescent lamp separately.
Use the handy-controller **SFC-HC** (optional) to change lighting conditions.		

Beam-axis alignment indicators help to reduce startup time

The beam channels of the safety light curtain are displayed in four blocks so that incident light position is shown at a glance. When the beam channel at the bottommost channel (or topmost channel), which is used as a reference for beam-axis alignments, is correctly aligned, the LED blinks red. After this, each block lights red as the beam axes successively become aligned. When all channel beam axes are aligned, all LEDs light green. The display also has a stability indicator (STB) added so that setup can be carried out with greater stability.

Beam-axis alignment indicator

A single model supports both PNP and NPN polarities reducing model numbers

PNP transistor output and NPN transistor output are combined in a single model. Overseas equipment that uses PNP, replacement with NPN sensors, factories that are positively grounded, and transfer of equipment overseas are all situations where the control circuits for a single model are suitable for use worldwide.

Lightweight!

The **SF4C** series is made of resin that is approx. 45 % lighter than the conventional aluminum case type.
Its lightweight body eases the burden on the mounting surface of the equipment and contributes to overall reduced weight during equipment transportation or overseas shipment.

* Except the cable part

IP67 protection structure

An IP67 (IEC) rating is achieved even in an ultra-slim resin body by using a laser welding method.

A fast response time for all models

SF4C-H□: 7 ms*, SF4C-F□: 9 ms*

The **SF4C** series reduces the safety distance as well as the calculation work required for the safety distance among models with different beam channels.

* When connecting safety sensors (safety light curtains, etc) to the safety input,the response time will be the total time of connected units.

Mutual interference is reduced without needing for interference prevention lines

The ELCA (Extraneous Light Check & Avoid) function automatically shifts the scan timing in order to avoid interference.

Material suitable for manufacturing a secondary battery

SF4C body is made of resin and the mounting bracket is made of Stainless Steel (SUS), so materials used are limited. Suitable for manufacturing secondary batteries or for food production equipment.

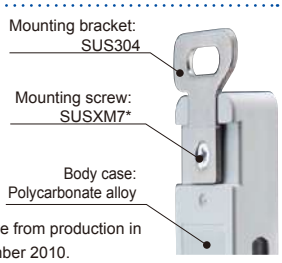

* Effective from production in November 2010.

Reducing the number of malfunctions caused by extraneous light

Double scanning method and retry processing are effective in eliminating the effects of extraneous light.

Handy-controller SFC-HC (Opitonal) enables the user to select a variety of settings HC

Operation of the large multi-purpose indicators can be configured

Mode No.	Operation of large multi-purpose indicators (factory setting: mode 0)					
	Large multi-purpose indicator 1	Large multi-purpose indicator 2	Control outputs (OSSD 1 / OSSD 2)		Muting function	Override function
	High or Low	High or Low	ON	OFF	Valid	Valid
0	Lights up in red	Lights up in green	–	–	-	-
1	Blinks in red	Blinks in green	–	–	-	-
2	Lights up in red	Blinks in green	–	–	-	-
3	Blinks in red	Lights up in green	–	–	-	-
4 (Note 1)	Lights up in red	Blinks in red	–	–	-	-
5 (Note 1)	Blinks in green	Lights up in green	–	–	-	-
6 (Note 1)	–	–	Lights up in green	Lights up in red	Blinks in green	-
7 (Note 1)	Lights up in red	Blinks in red	–	–	Lights up in green	Blinks in green

Notes: 1) Blinking takes precedence in case of same color brinks or light up.
2) During lockout, it is possible to blink in red.

Lockout blinking function	When lockout occurs
Valid	Blinks in red
Invalid	————

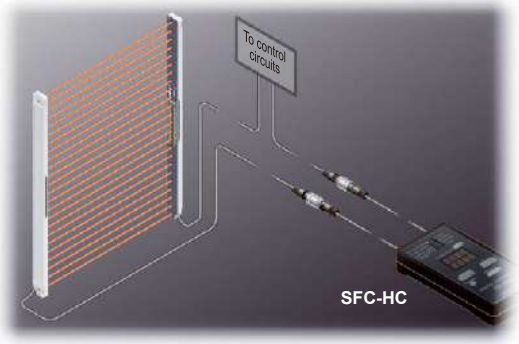

Fixed blanking function which allows selective beam channels to be activated improves productivity

The **SF4C** series is equipped with a fixed blanking function which allows specific beam channels to be selectively interrupted without causing the control output (OSSD) to output the OFF signal. This function is convenient for use with applications in which certain fixed obstacles tend to interrupt specific beam channels.

Auxiliary output has selectable output configuration

Mode No.	Description
0	Negative logic of the control outputs (OSSD 1, OSSD 2) (factory setting)
1	Positive logic of the control outputs (OSSD 1, OSSD 2)
2	For test input enabled: output OFF, For Disabled: output ON
3	For test input enabled: output ON, For Disabled: output OFF
4	For unstable incident beam: OFF (Note 1)
5	For unstable incident beam: ON (Note 1)
6	For muting: ON
7	For muting: OFF
8	For beam received: ON, For beam interrupted: OFF (Note 2)
9	For beam received: OFF, For beam interrupted: ON (Note 2)
A	For safety input enabled: ON, Disabled: OFF
B	For safety input enabled: OFF, Disabled: ON
C	For lockout: OFF
D	For lockout: ON

Notes: 1) The output cannot be used while the fix blanking function, floating blanking function or the muting function is activated.
2) This device outputs the beam received/interrupted state under activating the auxiliary output switching function using the handy-controller irrespective of activating other functions, fixed blanking function, floating blanking function, and muting function.

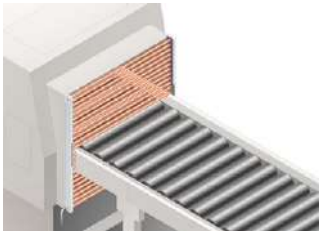

Floating blanking function which allows non-specified beam channels to be deactivated improves productivity

1, 2 or 3 non-specified beam channels can be deactivated. This function is useful in the event when an object passes through the safety light curtain's sensing area.

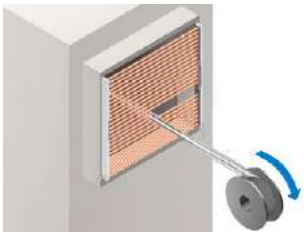

Note: When the floating blanking function is used, the size of the min. sensing object is changed.

Safety, productivity, and cost reduction [Muting control function]

The safety light curtain has a built-in muting control function that causes the line to stop only when a person passes through the safety light curtain, and does not stop the line when an object passes through. The muting sensors and muting lamps can be connected directly to the safety light curtain. Furthermore, the large multi-purpose indicators can be used as muting lamps, which contribute to less wiring troubles, improvement of safety and productivity, and cost reduction.

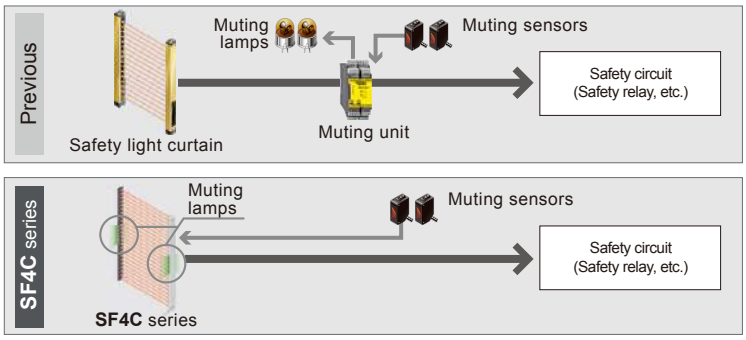

* If a failure diagnosis of muting lamp is needed as by the result of risk assessment, use the handy-controller **SFC-HC** (optional) to change the setting, and connect the muting lamp output wire (red) of this safety light curtain to an incandescent lamp separately.

Selective muting area [Separate muting control function for each beam channel] HC

The handy-controller **SFC-HC** (optional) can be used to carry out muting control for specified beam channels only. Because individual beam channel can be specified to suit the object, separate guards to prevent entry do not need to be set up.

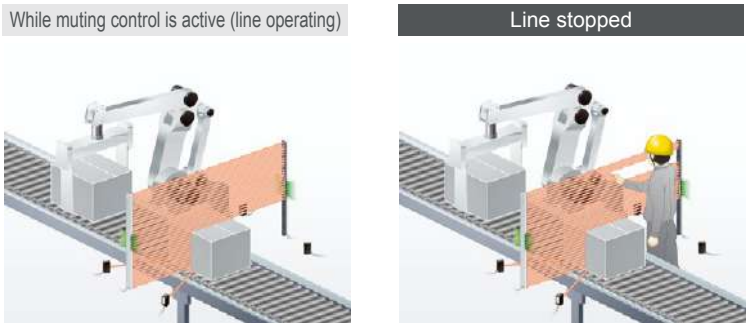

For example, depending on the height of the object, the muting function can be activated for 10 beam channels starting from the bottom most, so that if the 11th or subsequent beam channels are interrupted, it is judged that a person has entered the area and the line stops.

Safety measures when objects exit [Exit muting control function] HC

Muting at the exit of a machine is now possible using the handy-controller **SFC-HC** (optional). Just set a Max. four sec. delay timer on the muting sensors located at the exit. This is efficient for places with no installation space for muting sensors and also reduces cost and wiring.

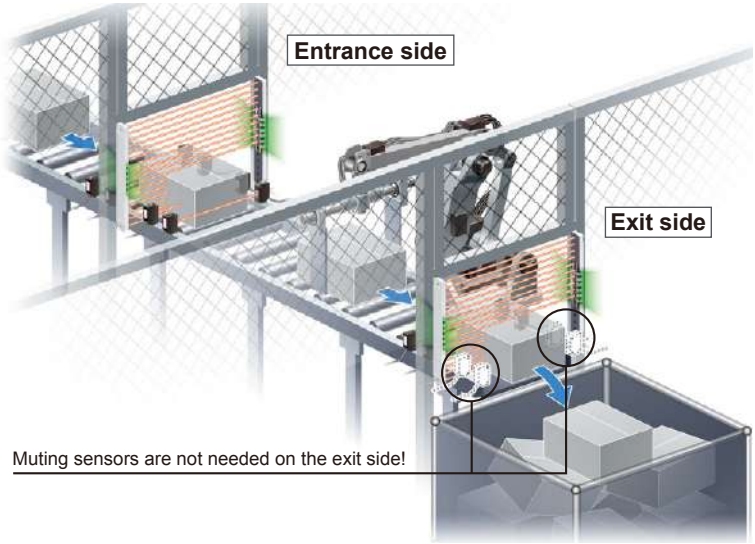

By installing muting sensors only within the dangerous zone and setting up a delay timer on the sensor, muting control is made possible even on the exit side where muting sensors cannot be installed.

Safety circuit is constructed without the need for a safety relay unit [External device monitoring function]

The safety light curtain has a built-in external device monitoring function (such as deposited relay monitoring) and an interlock function. This allows a safety circuit to be constructed so that a separate safety relay unit is not needed, and the control box has become smaller to help to achieve to lower costs.

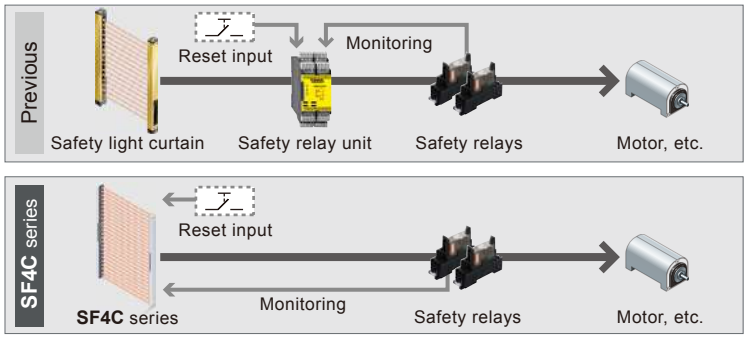

The safety light curtain can directly connect to external devices (safety relay, etc) without an exclusive control unit. This allows for simplified equipment, cost reduction, and error prevention.

Industry first*! Wire-saving when connecting to safety devices [Safety input function]

Contact outputs such as an emergency stop switches or a safety door switches can be connected to the safety light curtain. Also, by using the handy-controller **SFC-HC** (optional) up to three sets of safety light curtains can be cascade connected for a consolidated safety output.

* As of March 2009, in-company survey

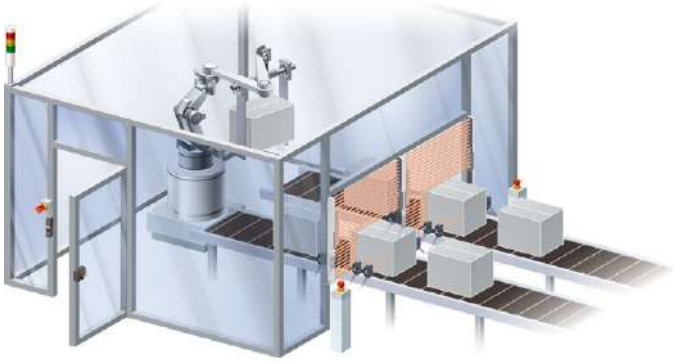

Direct connection of safety devices

Previous

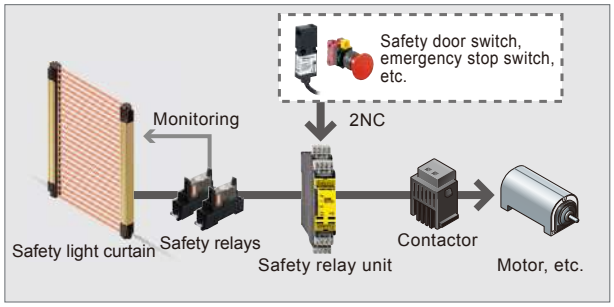

A safety relay unit is needed for connecting safety devices other than safety light curtain.

SF4C series

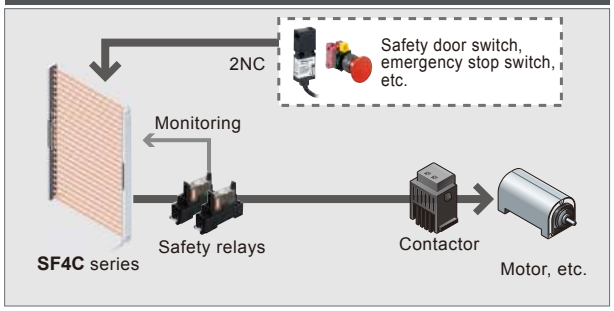

Direct connection of various safety devices is possible for a simplified safety circuit.

By using the handy-controller SFC-HC (optional) up to three sets of safety light curtains can be cascade connected for a consolidated safety output. (Note)

HC

Previous

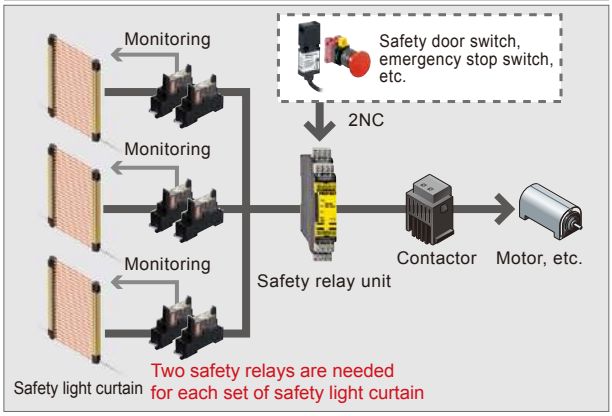

Three sets of safety light curtains require three sets of safety relays.

SF4C series

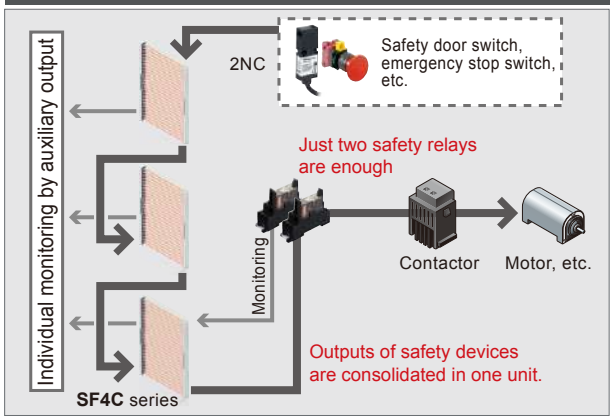

Individual monitoring on safety light curtains is possible while the outputs of three sets of safety light curtains and other safety devices are consolidated in one unit.

Note: This setting is possible with the use of handy-controller **SFC-HC** (optional) for **SF4C** series Ver.2.1 or later.

PRODUCT CONFIGURATION

Maintenance is prioritized
Pigtailed type (with mounting bracket, connector attached cable)

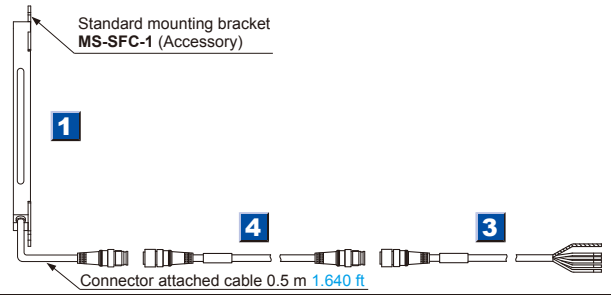

Basic set in one model No.
Cable type [Mounting bracket, with 5 m (16.404 ft) cable]

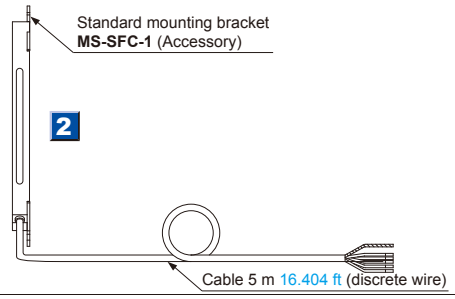

ORDER GUIDE

1 2 Safety light curtains

Type		Appearance	Operating range (Note 1)	Model No. (Note 2) 1 Pigtailed type	2 Cable type	Number of beam channels	Protective height (mm in)
Finger protection type	Min. sensing object ø14 mm ø0.551 in (10 mm 0.394 in beam pitch)	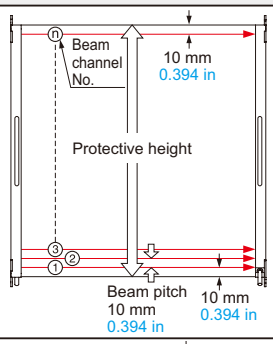	0.1 to 3 m 0.328 to 9.843 ft	SF4C-F15-J05	SF4C-F15	15	160 mm 6.299 in
				SF4C-F23-J05	SF4C-F23	23	240 mm 9.449 in
				SF4C-F31-J05	SF4C-F31	31	320 mm 12.598 in
				SF4C-F39-J05	SF4C-F39	39	400 mm 15.748 in
				SF4C-F47-J05	SF4C-F47	47	480 mm 18.898 in
				SF4C-F55-J05	SF4C-F55	55	560 mm 22.047 in
				SF4C-F63-J05	SF4C-F63	63	640 mm 25.197 in
Hand protection type	Min. sensing object ø25 mm ø0.984 in (20 mm 0.787 in beam pitch)	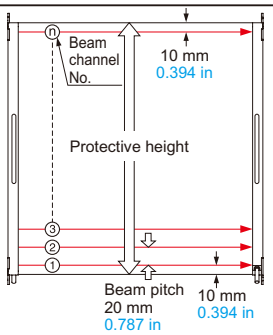	0.1 to 3 m 0.328 to 9.843 ft	SF4C-H8-J05	SF4C-H8	8	160 mm 6.299 in
				SF4C-H12-J05	SF4C-H12	12	240 mm 9.449 in
				SF4C-H16-J05	SF4C-H16	16	320 mm 12.598 in
				SF4C-H20-J05	SF4C-H20	20	400 mm 15.748 in
				SF4C-H24-J05	SF4C-H24	24	480 mm 18.898 in
				SF4C-H28-J05	SF4C-H28	28	560 mm 22.047 in
				SF4C-H32-J05	SF4C-H32	32	640 mm 25.197 in

Notes: 1) The operating range is the possible setting distance between the emitter and the receiver.
2) The model No. with suffix "**E**" shown on the label affixed to the product is the emitter, "**D**" shown on the label is the receiver.

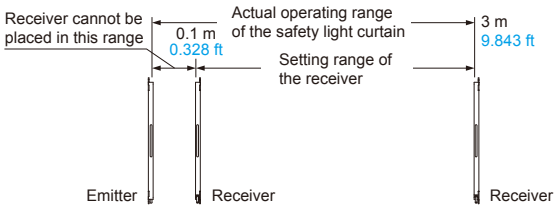

3 4 Mating cables

Type			Appearance	Model No.	Description	
Mating cables	3 With connector on one end		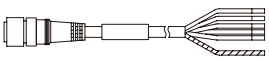	SFB-CC3-MU	Length: 3 m 9.843 ft Net weight: 430 g approx. (2 cables)	Cable with connector on one end for pigtailed type Two cables per set for emitter and receiver Cable color: Gray (for emitter), Gray with black line (for receiver) Connector color: Gray (for emitter), Black (for receiver) The min. bending radius: R6 mm R0.236 in
				SFB-CC7-MU	Length: 7 m 22.966 ft Net weight: 1,000 g approx. (2 cables)	
				SFB-CC10-MU	Length: 10 m 32.808 ft Net weight: 1,300 g approx. (2 cables)	
	4 With connectors on both ends	For emitter		SFB-CCJ3E-MU	Length: 3 m 9.843 ft Net weight: 190 g approx. (1 cable)	Cable with connectors on both ends for pigtailed type Cable color: Gray (for emitter), Gray with black line (for receiver) Connector color: Gray (for emitter), Black (for receiver) The min. bending radius: R6 mm R0.236 in
				SFB-CCJ10E-MU	Length: 10 m 32.808 ft Net weight: 660 g approx. (1 cable)	
		For receiver		SFB-CCJ3D-MU	Length: 3 m 9.843 ft Net weight: 210 g approx. (1 cable)	
				SFB-CCJ10D-MU	Length: 10 m 32.808 ft Net weight: 680 g approx. (1 cable)	

ORDER GUIDE

Spare parts (Accessories for safety light curtain)

Designation	Model No.	Description
Standard mounting bracket	**MS-SFC-1**	Allows the safety light curtain to be mounted at the rear with one M5 hexagon-socket-head bolt. Mounting direction of the bracket can be selected between vertical or horizontal (no dead zone). (4 pcs. per set for emitter and receiver)(Note)
Test rod ø14	**SF4C-TR14**	Min. sensing object for regular checking (ø14 mm ø0.551 in)
Test rod ø25	**SF4C-TR25**	Min. sensing object for regular checking (ø25 mm ø0.984 in)

Note: The body of the safety light curtain is made of resin, so please take into account the expansion and contraction of the longitudinal dimension. When machining mounting holes, please check the actual product.

Standard mounting bracket

• **MS-SFC-1**

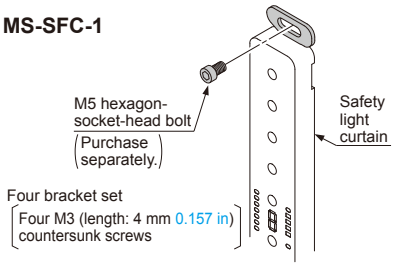

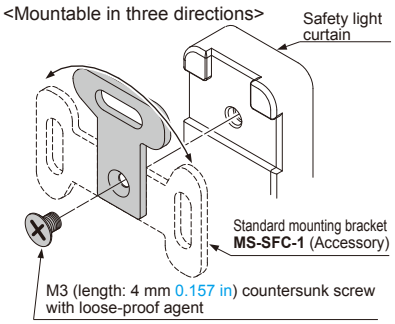

OPTIONS

Mounting brackets

Designation	Model No.	Description
NA2-N compatible mounting bracket	**MS-SFC-2**	Used when changing over area sensor **NA2-N** series to the **SF4C** series. The mounting holes of **NA2-N** series can continue to be used. Center mounting by a M6 hexagon-socket-head bolt is also possible. (4 pcs. per set for emitter and receiver)(Note)
Versatile bracket	**MS-SFC-3**	Two ways of mounting are possible. ① Rear mounting which enables beam adjustment ② Dead zoneless center mounting on aluminum frame (4 pcs. per set for emitter and receiver)(Note)
Intermediate supporting bracket for versatile bracket	**MS-SFC-4**	Used to support the safety light curtain in the middle. Be sure to purchase it when using the versatile bracket **MS-SFC-3**(optional) on **SF4C-F55**(**-J05**), **SF4C-F63**(**-J05**), **SF4C-H28**(**-J05**) or **SF4C-H32**(**-J05**). (2 pcs. per set for emitter and receiver)(Note)

Note: The body of the safety light curtain is made of resin, so please take into account the expansion and contraction of the longitudinal dimension. When machining mounting holes, please check the actual product.

NA2-N compatible mounting bracket

• **MS-SFC-2**

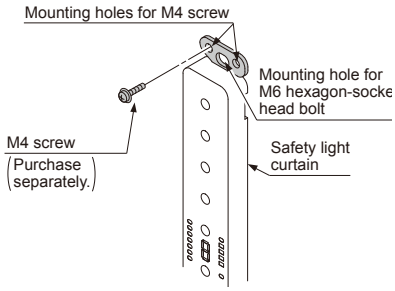

Versatile bracket

• **MS-SFC-3**

<Rear mounting>

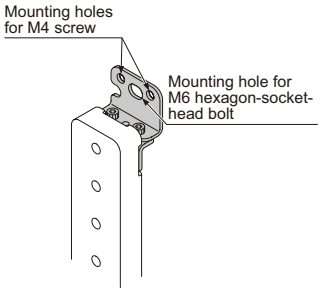

<Dead zoneless mounting>

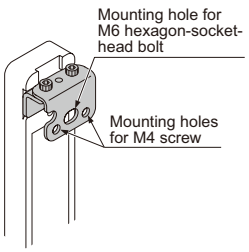

Intermediate supporting bracket for versatile bracket

• **MS-SFC-4**

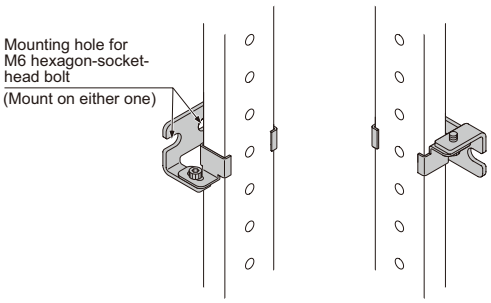

OPTIONS

Control unit

Designation	Appearance	Model No.	Description
Slim type control unit	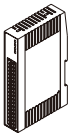	**SF-C13**	Use a discrete wire cable to connect to the safety light curtain. Relay output. Compatible with up to Control Category 4.

●Recommended safety relay

Panasonic Corporation
SF relay, slim type

SF relay, slim type
SFS3-L-DC24V (AG1S132)
SFS4-L-DC24V (AG1S142)

DIN terminal block
SFS4-SFD (AG1S847)[4-poles type]
SFS6-SFD (AG1S867)[6-poles type]

Note: Contact Panasonic Corporation for details on the recommended products.

Item \ Type	With LED indicator	
Model No.	SFS3-L-DC24V	SFS4-L-DC24V
Part No.	AG1S132	AG1S142
Contact arrangement	3a1b	4a2b
Rated nominal switching capacity	6 A / 250 V AC, 6 A / 30 V DC	
Min. switching capacity	1 mA / 5 V DC	
Coil rating	15 mA / 24 V DC	20.8 mA / 24 V DC
Rated power consumption	360 mW	500 mW
Operation time	20 ms or less	
Release time	20 ms or less	
Ambient temperature	–40 to +85 °C –40 to +185 °F (Humidity: 5 to 85 % RH)	
Applicable standards	UL/c-UL, TÜV, Korea's S-mark	

Y-shaped connectors

Type	Appearance	Model No.	Description	
Wire-saving Y-shaped connector		**SFC-WY1**	Wire-saving connector for **SF4C-F□-J05** and **SF4C-H□-J05**. Cables of emitter and receiver are consolidated into one cable for wire-saving. Wiring has +24 V, 0 V, OSSD 1, OSSD 2, output polarity setting wire (shield), large multi-purpose indicator input 1, and large multi-purpose indicator input 2 only. Net weight: 40 g approx. [Power wire and synchronization wire are connected inside the connector. Interlock is disabled (automatic reset).]	
Cable with connector on one side	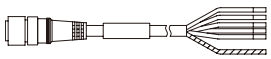	**WY1-CCN3**	Cable length: 3 m 9.843 ft Net weight: 200 g approx. (1 cable)	Mating cable for Y-shaped connector Cable color: Gray (with black line) Connector color: Black The min. bending radius: R6 mm R0.236 in Connector outer diameter: ø14 mm ø0.551 in max.
		WY1-CCN10	Cable length: 10 m 32.808 ft Net weight: 620 g approx. (1 cable)	

By using the Y-shaped connector, the least required wires such as power or safety output are consolidated into one cable. Man-hours taken for wiring is eliminated to the minimum. Construction times as well as wiring mistakes are greatly reduced.

Previous A total of 24 wires

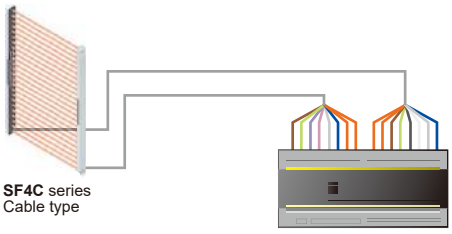

SF4C series
Cable type

Safety PLC / Remote I/O /
Safety relay unit / **SF-C13**, etc.

Y-shaped connector Only 7 wires
Less wiring mistakes! Reduced wiring time!
Easy wiring to Safety PLC, etc.

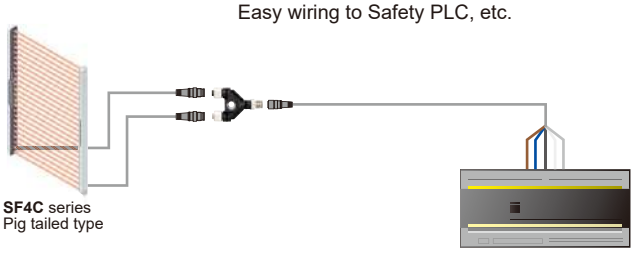

SF4C series
Pig tailed type

Safety PLC / Remote I/O /
Safety relay unit / **SF-C13**, etc.

OPTIONS

Product configuration

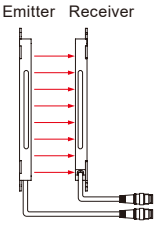

Extension cable (1 cable for receiver)

SFB-CCJ3D-MU (3 m 9.843 ft for receiver)
SFB-CCJ10D-MU (10 m 32.808 ft for receiver)

Extension cable (1 cable for emitter)

SFB-CCJ3E-MU (3 m 9.843 ft for emitter)
SFB-CCJ10E-MU (10 m 32.808 ft for emitter)

Y-shaped connector
SFC-WY1

Extension cable

SFB-CCJ3D (3 m 9.843 ft)
SFB-CCJ10D (10 m 32.808 ft)

Cable with connector on one side (Common for all models)

WY1-CCN3 (3 m 9.843 ft)
WY1-CCN10 (10 m 32.808 ft)

Connector pin layout

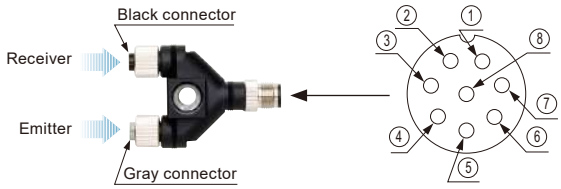

Connector pin No.	Description
①	OSSD 2
②	+24 V
③	OSSD 1
④	Not used
⑤	Large multi-purpose indicator input 1
⑥	Large multi-purpose indicator input 2
⑦	0 V
⑧	Output polarity setting wire (Shield)

Wiring diagram of control unit SF-C13

<For PNP output (minus ground)>

- Connect the safety light curtain control outputs OSSD 1 and OSSD 2 to S1 and S2 respectively.

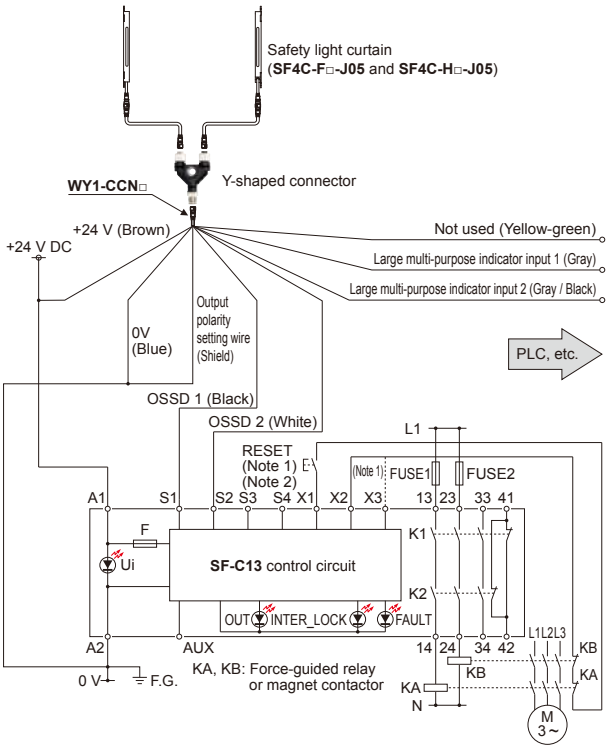

Notes: 1) The above diagram is when using manual reset. If automatic reset is used, disconnect the lead from X2 and connect it to X3. In this case, a reset (RESET) button is not needed.
2) Use a momentary-type switch as the reset (RESET) button.
3) Unused wires must be insulated.

<For NPN output (plus ground)>

- Connect the safety light curtain control outputs OSSD 1 and OSSD 2 to S4 and S2 respectively and ground the + side.

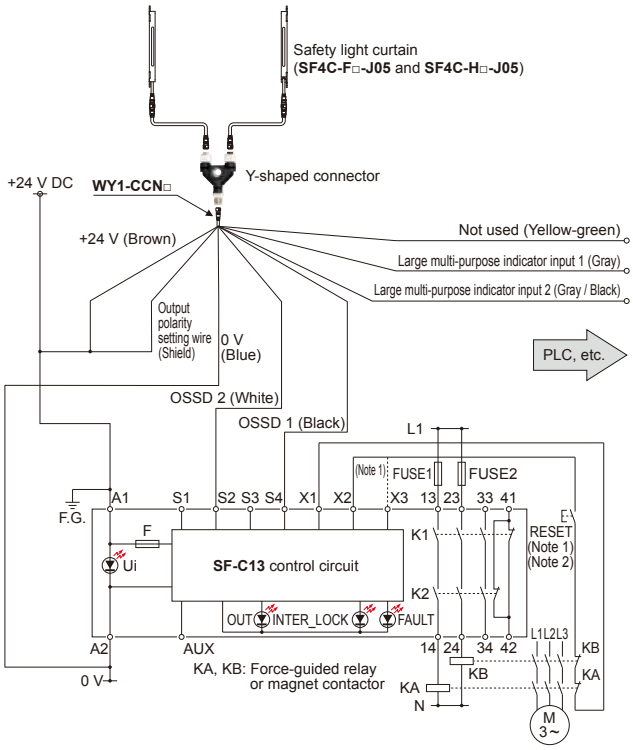

Notes: 1) The above diagram is when using manual reset. If automatic reset is used, disconnect the lead from X2 and connect it to X3. In this case, a reset (RESET) button is not needed.
2) Use a momentary-type switch as the reset (RESET) button.
3) Unused wires must be insulated.

OPTIONS

Handy-controller

Designation	Appearance	Model No.
Handy-controller		**SFC-HC**
Cable set for cable type connection	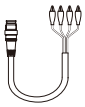	**SFC-WNC1**

Pigtailed type

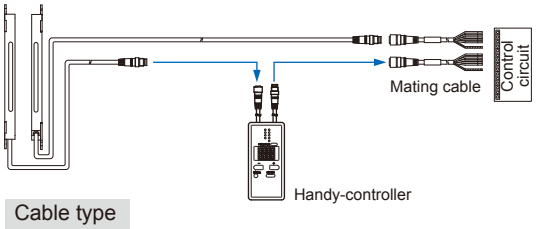

Cable type

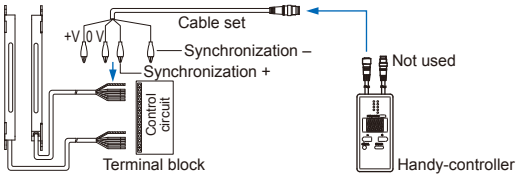

Metal protection case

Applicable beam channels / Designation		Metal protection case (2 pcs. per set for emitter and receiver)
SF4C-F□	**SF4C-H□**	Model No.
15	8	**MS-SFCH-8**
23	12	**MS-SFCH-12**
31	16	**MS-SFCH-16**
39	20	**MS-SFCH-20**
47	24	**MS-SFCH-24**
55	28	**MS-SFCH-28**
63	32	**MS-SFCH-32**

• **MS-SFCH-8**

• **MS-SFCH-12/16/20/24/28/32**

SPECIFICATIONS

Safety light curtain individual specifications

SF4C-F□

Item	Type	Min. sensing object ø14 mm ø0.551 in type (10 mm 0.394 in beam pitch)						
Model No.	Pigtailed type	SF4C-F15-J05	SF4C-F23-J05	SF4C-F31-J05	SF4C-F39-J05	SF4C-F47-J05	SF4C-F55-J05	SF4C-F63-J05
	Cable type	SF4C-F15	SF4C-F23	SF4C-F31	SF4C-F39	SF4C-F47	SF4C-F55	SF4C-F63
No. of beam channels		15	23	31	39	47	55	63
Protective height		160 mm 6.299 in	240 mm 9.449 in	320 mm 12.598 in	400 mm 15.748 in	480 mm 18.898 in	560 mm 22.047 in	640 mm 25.197 in
Current consumption	Large multi-purpose indicator lights off	Emitter: 70 mA or less Receiver: 80 mA or less	Emitter: 75 mA or less Receiver: 85 mA or less		Emitter: 80 mA or less Receiver: 90 mA or less		Emitter: 85 mA or less Receiver: 95 mA or less	
	Large multi-purpose indicator lights up	Emitter: 105 mA or less Receiver: 110 mA or less	Emitter: 110 mA or less Receiver: 115 mA or less		Emitter: 115 mA or less Receiver: 120 mA or less		Emitter: 120 mA or less Receiver: 125 mA or less	
PFHD		2.29×10^{-9}	2.73×10^{-9}	3.18×10^{-9}	3.62×10^{-9}	4.06×10^{-9}	4.50×10^{-9}	4.95×10^{-9}
MTTFD		100 years or more						
Net weight (Total of emitter and receiver)	Pigtailed type	210 g approx.	270 g approx.	340 g approx.	400 g approx.	470 g approx.	540 g approx.	600 g approx.
	Cable type	600 g approx.	670 g approx.	730 g approx.	800 g approx.	860 g approx.	930 g approx.	1,000 g approx.

SF4C-H□

Item	Type	Min. sensing object ø25 mm ø0.984 in type (20 mm 0.787 in beam pitch)						
Model No.	Pigtailed type	SF4C-H8-J05	SF4C-H12-J05	SF4C-H16-J05	SF4C-H20-J05	SF4C-H24-J05	SF4C-H28-J05	SF4C-H32-J05
	Cable type	SF4C-H8	SF4C-H12	SF4C-H16	SF4C-H20	SF4C-H24	SF4C-H28	SF4C-H32
No. of beam channels		8	12	16	20	24	28	32
Protective height		160 mm 6.299 in	240 mm 9.449 in	320 mm 12.598 in	400 mm 15.748 in	480 mm 18.898 in	560 mm 22.047 in	640 mm 25.197 in
Current consumption	Large multi-purpose indicator lights off	Emitter: 70 mA or less Receiver: 85 mA or less	Emitter: 70 mA or less Receiver: 90 mA or less		Emitter: 75 mA or less Receiver: 95 mA or less		Emitter: 80 mA or less Receiver: 100 mA or less	
	Large multi-purpose indicator lights up	Emitter: 120 mA or less Receiver: 135 mA or less	Emitter: 120 mA or less Receiver: 140 mA or less		Emitter: 120 mA or less Receiver: 145 mA or less		Emitter: 120 mA or less Receiver: 150 mA or less	
PFHD		1.66×10^{-9}	1.90×10^{-9}	2.10×10^{-9}	2.33×10^{-9}	2.54×10^{-9}	2.77×10^{-9}	2.98×10^{-9}
MTTFD		100 years or more						
Net weight (Total of emitter and receiver)	Pigtailed type	240 g approx.	300 g approx.	360 g approx.	420 g approx.	490 g approx.	550 g approx.	610 g approx.
	Cable type	630 g approx.	700 g approx.	760 g approx.	820 g approx.	880 g approx.	950 g approx.	1,000 g approx.

Note: Where measurement conditions have not been specified precisely, the conditions used were an ambient temperature of +20 °C +68 °F.
PFHD: Probability of dangerous failure per hour, MTTFD: Mean time to dangerous failure (in years)

SPECIFICATIONS

Safety light curtain common specifications

Item / Type		Pigtailed type		Cable type	
Model No.		**SF4C-F□-J05**	**SF4C-H□-J05**	**SF4C-F□**	**SF4C-H□**
Applicable standards	International standard	IEC 61496-1/2 (Type 4), ISO 13849-1 (Category 4, PLe), IEC 61508-1 to 7 (SIL 3)			
	Japan	JIS B 9704-1/2 (Type 4), JIS B 9705-1 (Category 4), JIS C 0508 (SIL 3)			
	Europe (EU) (Note 2)	EN 61496-1 (Type 4), EN ISO 13849-1 (Category 4, PLe), EN 61508-1 to 7 (SIL 3), EN 55011, EN 50178, EN 61000-6-2			
	North America (Note 3)	ANSI/UL 61496-1/2 (Type 4), ANSI/UL 508, UL 1998 (Class 2), CAN/CSA 61496-1/2 (Type 4), CAN/CSA C22.2 No.14, OSHA 1910.212, OSHA 1910.217(C), ANSI B11.1 to B11.19, ANSI/RIA 15.06			
Regulatory compliance		CE Marking (Machinery Directive, EMC Directive, RoHS Directive), TÜV SÜD certification, TÜV SÜD NRTL certification, S-mark certification[**SF4C-H□(-J05)** only]			
Operating range (Note 4)		0.1 to 3 m 0.328 to 9.843 ft			
Beam pitch		10 mm 0.394 in	20 mm 0.787 in	10 mm 0.394 in	20 mm 0.787 in
Min. sensing object (Note 5)		ø14 mm ø0.551 in opaque object	ø25 mm ø0.984 in opaque object	ø14 mm ø0.551 in opaque object	ø25 mm ø0.984 in opaque object
Effective aperture angle		±2.5° or less [for an operating range exceeding 3 m 9.843 ft (conforming to IEC 61496-2, ANSI/UL 61496-2)]			
Supply voltage		24 V DC $^{+10}_{-15}$ % Ripple P-P 10 % or less			
Control outputs (OSSD 1, OSSD 2)		PNP open-collector transistor / NPN open-collector transistor (switching method) <When selecting PNP output> • Max. source current: 200 mA • Applied voltage: same as supply voltage (between the control output and +V) • Residual voltage: 2.5 V or less (source current 200 mA, when using 10 m 32.808 ft length cable) • Leakage current: 200 µA or less (including power supply OFF condition) • Max. load capacity: 1 µF (No load to Max. source current) • Load wiring resistance: 3 Ω or less <When selecting NPN output> • Max. sink current: 200 mA • Applied voltage: same as supply voltage (between the control output and 0 V) • Residual voltage: 2.5 V or less (sink current 200 mA, when using 10 m 32.808 ft length cable) • Leakage current: 200 µA or less (including power supply OFF condition) • Max. load capacity: 1 µF (No load to Max. sink current) • Load wiring resistance: 3 Ω or less			
	Operation mode	ON when all beam channels are received, OFF when one or more beam channels are interrupted (OFF also in case of any malfunction in the safety light curtain or the synchronization signal)(Note 6,7)			
	Protection circuit	Incorporated			
Response time		OFF response: 9 ms or less, ON response: 90 ms or less	OFF response: 7 ms or less, ON response: 90 ms or less	OFF response: 9 ms or less, ON response: 90 ms or less	OFF response: 7 ms or less, ON response: 90 ms or less
Auxiliary output (Non-safety output)		PNP open-collector transistor / NPN open-collector transistor (switching method) <When selecting PNP output> • Max. source current: 100 mA • Applied voltage: same as supply voltage(between the auxiliary source and +V) • Residual voltage: 2.5 V or less (source current 100 mA, when using 10 m 32.808 ft length cable) <When selecting NPN output> • Max. sink current: 100 mA • Applied voltage: same as supply voltage(between the auxiliary sink and 0 V) • Residual voltage: 2.5 V or less (sink current 100 mA, when using 10 m 32.808 ft length cable)			
	Operation mode	OFF when control outputs are ON, ON when control outputs are OFF [Factory setting, operating mode can be changed using the handy-controller **SFC-HC**(optional).]			
	Protection circuit	Incorporated			
ELCA function		Incorporated (reducing mutual interference automatically)			
Test / reset input function		Incorporated			
Interlock function		Incorporated [Manual reset / Automatic reset (Note 8)]			
External device monitoring function		Incorporated			
Safety input function		Incorporated (safety contact)			
Muting function / Override function		Incorporated			
Optional functions (Note 9)		Fixed blanking, floating blanking, auxiliary output change, safety input (safety sensor), large multi-purpose indicator setting change, interlock setting change, external relay monitoring setting change, muting setting change, override setting change, protecting			
Pollution degree / Operating altitude		3 / 2,000 m 6,561 68 ft or less (Note 10)			
Environmental resistance	Degree of protection	IP67 / IP65 (IEC)			
	Ambient temperature	–10 to +55 °C +14 to +131 °F (No dew condensation or icing allowed), Storage: –25 to +60 °C –13 to +140 °F			
	Ambient humidity	30 to 85 % RH, Storage: 30 to 85 % RH			
	Ambient illuminance	Incandescent light: 5,000 ℓx or less at the light-receiving face			
	Dielectric strength voltage	1,000 V AC for one min. between all supply terminals connected together and enclosure			
	Insulation resistance	20 MΩ, or more, with 500 V DC megger between all supply terminals connected together and enclosure			
	Vibration resistance	10 to 55 Hz frequency, 0.75 mm 0.030 in double amplitude in X, Y and Z directions for two hours each			
	Shock resistance	300 m/s² acceleration (30 G approx.) in X, Y and Z directions three times each			
Emitting element		Infrared LED (Peak emission wavelength: 855 nm 0.034 mil)			
Material		Enclosure: Polycarbonate alloy, Sensing surface: Polycarbonate alloy, **MS-SFC-1** (Standard mounting bracket): SUS			
Cable		0.15 mm² (power line: 0.2 mm²) 12-core heat-resistant PVC cable with connector, 0.5 m 1.640 ft long		0.15 mm² (power line: 0.2 mm²) 12-core heat-resistant PVC cable, 5 m 16.404 ft long	
Cable extension		Extension up to 40.5 m 132.874 ft is possible for both emitter and receiver optional mating cables		Extension up to 40.5 m 132.874 ft is possible for both emitter and receiver, with 0.2 mm² or more cable (Note 11) (Note 12)	
Accessories		**MS-SFC-1** (Standard mounting bracket): 1 set, **SF4C-TR14** (Test rod): 1 No.	**MS-SFC-1** (Standard mounting bracket): 1 set, **SF4C-TR25** (Test rod): 1 No.	**MS-SFC-1** (Standard mounting bracket): 1 set, **SF4C-TR14** (Test rod): 1 No.	**MS-SFC-1** (Standard mounting bracket): 1 set, **SF4C-TR25** (Test rod): 1 No.

Notes: 1) Where measurement conditions have not been specified precisely, the conditions used were an ambient temperature of +20 °C +68 °F.
2) Regarding EU Machinery Directive, a Notified Body, TÜV SÜD, has certified with the type examination certificate.
3) With regards to the standards in the US, under the US regulation 29 CFR 1910.7, TÜV SÜD, a Nationally Recognized Testing Laboratory (NRTL) certified by OSHA, has certified with the safety certificate based on UL/ANSI standards. With regards to the standards in Canada, under the safety regulations based on CEC (Canadian Electric Code), TÜV SÜD America, a Certification Body accredited by SCC, has certified with the safety certificate based on CSA standards.
4) The operating range is the possible setting distance between the emitter and the receiver.
5) When the floating blanking function is used, the size of the min. sensing object is changed.
6) The outputs are not "OFF" when muting function is active even if the beam channel is interruped.
7) In case the blanking function is valid, the operation mode is changed.
8) The manual reset and automatic reset are possible to be switched depending on the wiring status.
9) In case of using optional function, the handy-controller **SFC-HC** (optional) is required.
10) Do not use or store in an environment pressurized to atmospheric pressure or higher at an altitude of 0 m.
11) When the muting lamp is used, the cable can be extended within 30.5 m 100.066 ft (for emitter / receiver).
12) When the synchronization + wire (orange) and synchronization - wire (orange / black) is extended with a cable other than exclusive cable, use a 0.2 mm² or more shielded twisted pair cable.

SPECIFICATIONS

Control unit

Item \ Model No.		SF-C13
Connectable safety light curtains		Safety light curtain manufactured by Panasonic Industrial Devices SUNX
Applicable standards		EN 61496-1 (Type 4), EN 55011, EN ISO 13849-1 (Category 4, PLe), IEC 61496-1 (Type 4), ISO 13849-1 (Category 4, PLe), JIS B 9704-1 (Type 4), JIS B 9705-1 (Category 4), ANSI/UL 61496-1 (Type 4), UL 1998 (Class 2)
Regulatory compliance		CE Marking (Machinery Directive, Low Voltage Directive, EMC Directive, RoHS Directive), UL/c-UL Listing certification, TÜV SÜD certification, S-mark certification
Control category		ISO 13849-1 (EN ISO 13849-1, JIS B 9705-1) compliance up to Category 4, PLe standards
Supply voltage / Current consumption		24 V DC ± 10 % Ripple P-P 10 % or less / 100 mA or less (without safety light curtain)
Fuse (power supply)		Built-in electronic fuse, Triggering current: 0.5 A or more, Reset after power down
Safety output		NO contact × 3 (13-14, 23-24, 33-34)
	Application category	AC-15, DC-13 (IEC 60947-5-1)
	Rated operation voltage (Ue) / Rated operation current (Ie)	30 V DC / 4 A, 230 V AC / 4 A, resistive load (For inductive load, during contact protection). Min applicable load: 10 mA (at 24 V DC) (Note 2)
	Contact resistance	100 mΩ or less (initial value)
	Contact protection fuse rated	4 A (slow blow)
Pick-up delay (Auto reset / Manual reset)		80 ms or less / 90 ms or less
Response time (Recovery time)		10 ms or less
Auxiliary output		Safety relay contact (NC contact) × 1 (41-42) (Related to safety output)
	Rated operation voltage / current	24 V DC / 2 A, Min. applicable load: 10 mA (at 24 V DC)
	Contact protection fuse rated	2 A (slow blow)
Semiconductor auxiliary output (AUX)		PNP open-collector transistor • Max. source current: 60 mA
	Output operation	On when the safety light curtain is interrupted
Excess voltage category		II
Polarity selection function		Incorporated (Cable connection allows selection of plus/minus ground) Minus ground: Correspond to PNP output safety light curtain Plus ground: Correspond to NPN output safety light curtain
Pollution degree		2
Environmental resistance	Protection	Enclosure: IP40, Terminal IP20
	Ambient temperature	–10 to +55 °C +14 to +131 °F (No dew condensation or icing allowed), Storage: –25 to +70 °C –13 to +158 °F
	Ambient humidity	30 to 85 % RH, Storage: 30 to 95 % RH
	Vibration resistance	Resistance/malfunction 10 to 55 Hz frequency, 0.35 mm 0.014 in double amplitude in X, Y, and Z directions twenty times each
Enclosure material		ABS
Weight		Net weight: 200 g approx.

Notes: 1) Where measurement conditions have not been specified precisely, the conditions used were an ambient temperature of +20 °C +68 °F
2) If several **SF-C13** units are being used in line together, leave a space of 5 mm 0.197 in or more between each unit. If the units are touching each other, reduce the rated operating current for safety output in accordance with the ambient operating temperature as shown in the graphs at right.
3) Refer to p.667 for details of the specifications for **SF-C13.**

Dilating when SF-C13 units are mounted close together

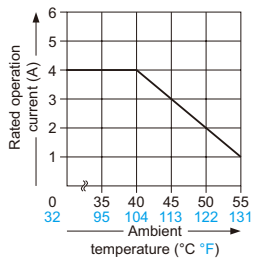

Handy-controller

Item \ Model No.		SFC-HC
Supply voltage		24 V DC $^{+10}_{-15}$ % Ripple P-P 10 % or less (common to safety light curtain power supply)
Current consumption		65 mA or less
Communication method		RS-485 two-way communications (Specific procedure)
Digital display		4-digit red LED display × 2 (Selected beam channels, setting contents etc. are displayed.)
Function indicators		Green LED × 9 (Set function is displayed.)
Functions		Fixed blanking / Floating blanking / Auxiliary output change / Satety input setting change / Large multi-purpose indicator setting change / Muting setting change / Interlock setting change / External device monitoring setting change / Override setting changing function 60 sec. / Protecting
Environmental resistance	Ambient temperature	–10 to +55 °C +14 to +131 °F (No dew condensation or icing allowed), Storage: –25 to +70 °C –13 to +158 °F
	Ambient humidity	30 to 85 % RH, Storage: 30 to 85 % RH
	Voltage withstandability	1,000 V AC for one min. between all supply terminals connected together and enclosure
	Insulation resistance	20 MΩ, or more, with 500 V DC megger between all supply terminals connected together and enclosure
Cable		12-core shielded cable, 0.5 m 1.640 ft long, with a connector at the end (2 cables)
Weight		Net weight: 200 g approx.

Note: Where measurement conditions have not been specified precisely, the conditions used were an ambient temperature of +20 °C +68 °F.

I/O CIRCUIT AND WIRING DIAGRAMS

I/O circuit diagram

<In case of using I/O circuit for PNP output>

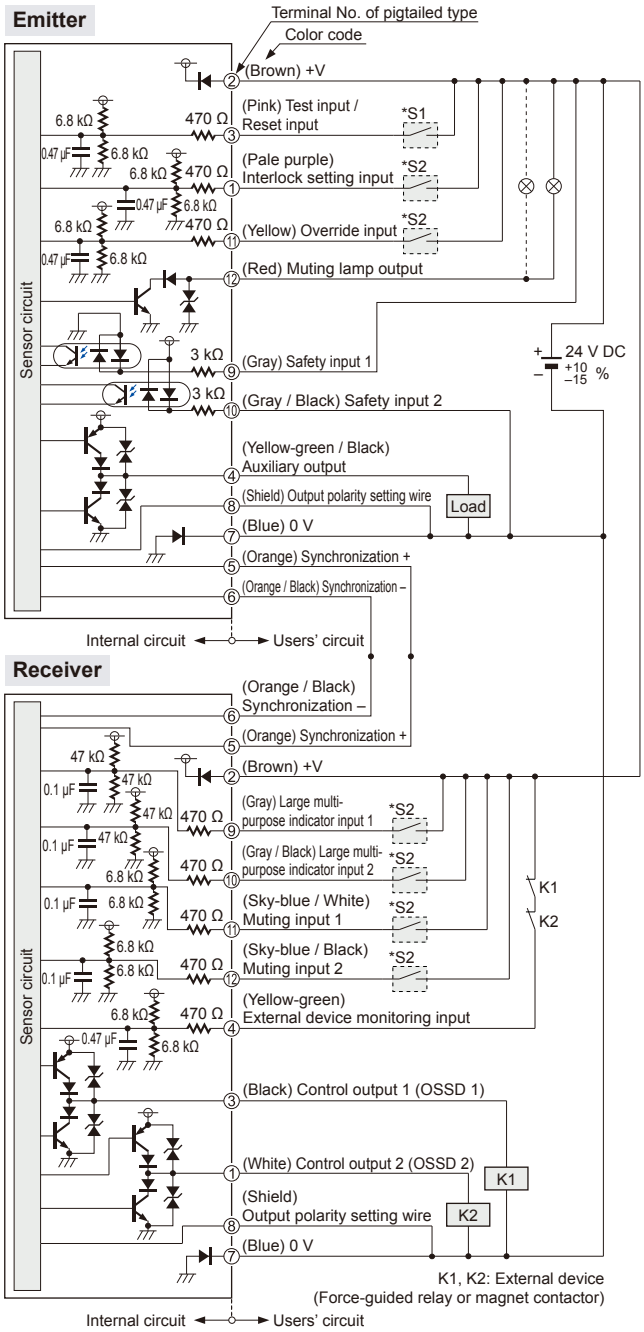

* S1, S2

Switch S1
- Test input / Reset input
  For manual reset
  Vs to Vs – 3.5 V (sink current 5 mA or less): OFF (Note)
  Open: ON

  For automatic reset
  Vs to Vs – 3.5 V (sink current 5 mA or less): ON (Note)
  Open: OFF

Switch S2
- Interlock setting input, Override input, Muting input 1/2, Large multi-purpose indicator input 1/2,
  Vs to Vs – 3.5 V (sink current 5 mA or less): Valid (Note)
  Open: Invalid

Note: Vs is the applying supply voltage.

I/O circuit diagram

<In case of using I/O circuit for NPN output>

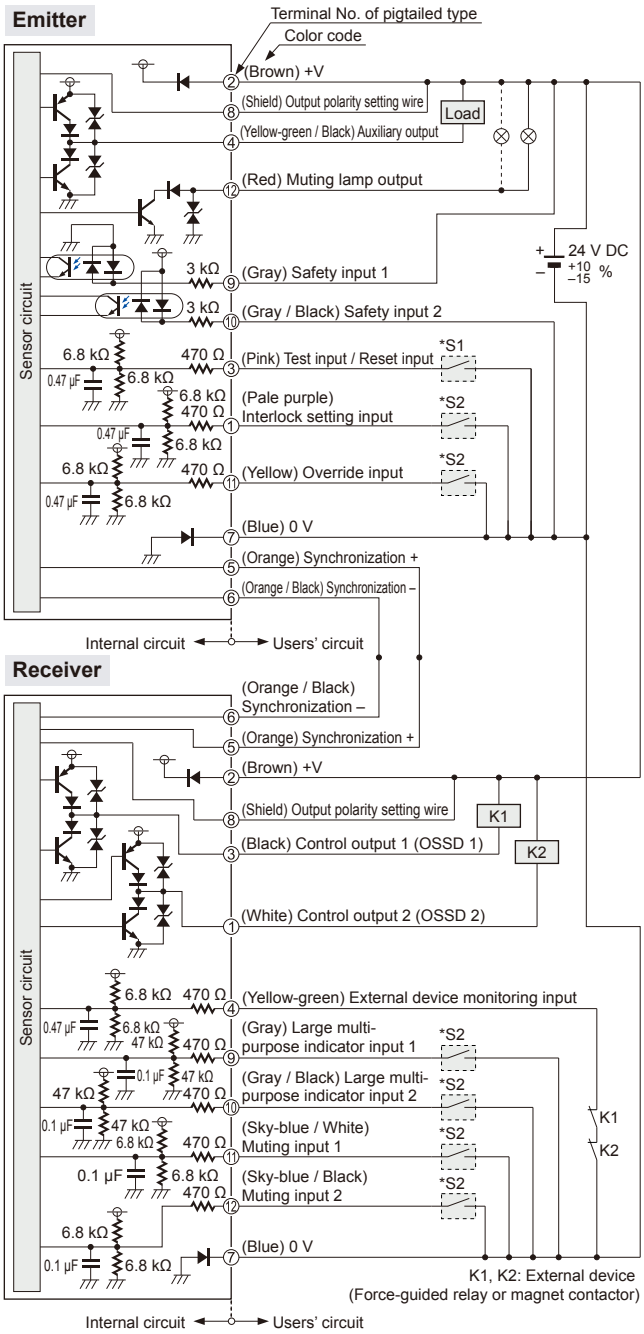

* S1, S2

Switch S1
- Test input / Reset input
  For manual reset
  0 to +2.5 V (source current 5 mA or less): OFF
  Open: ON

  For automatic reset
  0 to +2.5 V (source current 5 mA or less): OFF
  Open: ON

Switch S2
- Interlock setting input, Override input, Muting input 1/2, Large multi-purpose indicator input 1/2,
  0 to +2.5 V (source current 5 mA or less): Valid
  Open: Invalid

I/O CIRCUIT AND WIRING DIAGRAMS

Connection example

Basic wiring: Min. operation only

This is the general configuration using one set of the emitter and receiver facing each other. The control outputs (OSSD 1 / OSSD 2) turn OFF if the light is interrupted, while they automatically turn ON if receive the light.
The auxiliary output is used to invalid the external device monitoring function. The auxiliary output cannot be connected to external devices.

<In case of using I/O circuit for PNP output>

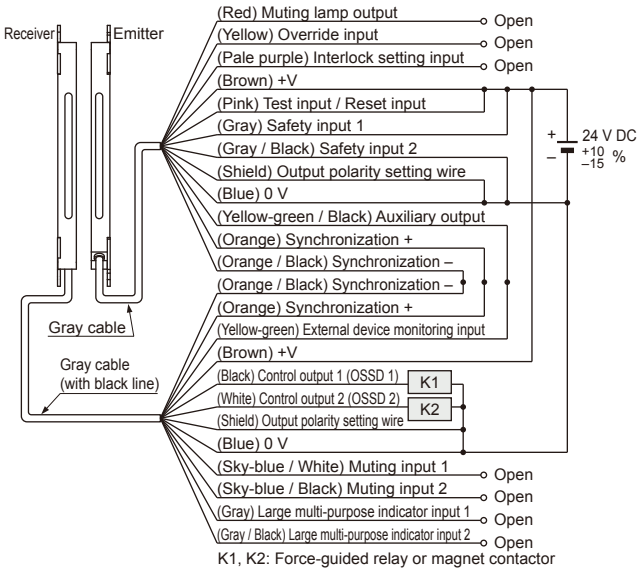

K1, K2: Force-guided relay or magnet contactor

Interlock function	Disabled (Automatic reset)
External device monitoring function	Disabled
Auxiliary output	Not used
Output polarity setting wire	PNP
Safety input	Invalid

<In case of using I/O circuit for NPN output>

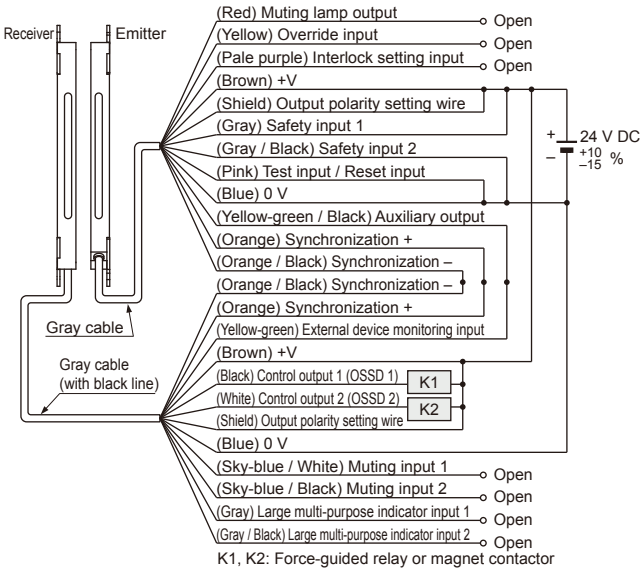

K1, K2: Force-guided relay or magnet contactor

Interlock function	Disabled (Automatic reset)
External device monitoring function	Disabled
Auxiliary output	Not used
Output polarity setting wire	NPN
Safety input	Invalid

Refer to the instruction manual for details.
The instruction manual can be download from our website.

PRECAUTIONS FOR PROPER USE

- When this device is used in the “PSDI mode”, an appropriate control circuit must be configured between this device and the machinery. For details, be sure to refer to the standards or regulations applicable in each region or country.

- This catalog is a guide to select a suitable product. Be sure to read instruction manual prior to its use.
- Both emitter and receiver are adjusted before shipment, please apply both emitter and receiver with the same serial No. The serial No. is indicated on the plates of both emitter and receiver. (Indicated under model No.)

- Make sure to carry out the test run before regular operation.
- Do not install this safety light curtain with a machine whose operation cannot be stopped immediately in the middle of an operation cycle by an emergency stop equipment.

Others

- This device has been developed / produced for industrial use only.
- Do not use during the initial transient time (2 sec.) after the power supply is switched on.
- Avoid dust, dirt and steam.
- Take care that the sensor does not come in direct contact with water, oil, grease, or organic solvents, such as, thinner, etc.
- Take care that the sensor is not directly exposed to fluorescent lamp from a rapid-starter lamp or a high frequency lighting device, as it may affect the sensing performance.

- The body of this device is made of resin, so please take into account the expansion and contraction of the longitudinal dimension. When machining mounting holes, please check the actual product.

Handy-controller

This safety light curtain enables to set each function using the handy-controller **SFC-HC** (optional). Among the functions, the contents related to the safety distance such as the size of the minimum sensing object and response time are varied depending on the setting condition. When setting each function, re-calculate the safety distance, and make enough space larger than the calculated safety distance. Failure to do so might cause the accident that the device cannot stop quickly before reaching the dangerous area of the machinery, resulting in the serious injury or death.

- Refer to the instruction manual of the handy-controller for details of the function settings for using handy-controller **SFC-HC** (optional).

DIMENSIONS (Unit: mm in)

The CAD data can be downloaded from our website.

SF4C-F□ SF4C-H□ Safety light curtain

Mounting bracket assembly dimensions

Mounting drawing for the safety light curtains using the standard mounting brackets **MS-SFC-1** (accessory).

<Center mounting>

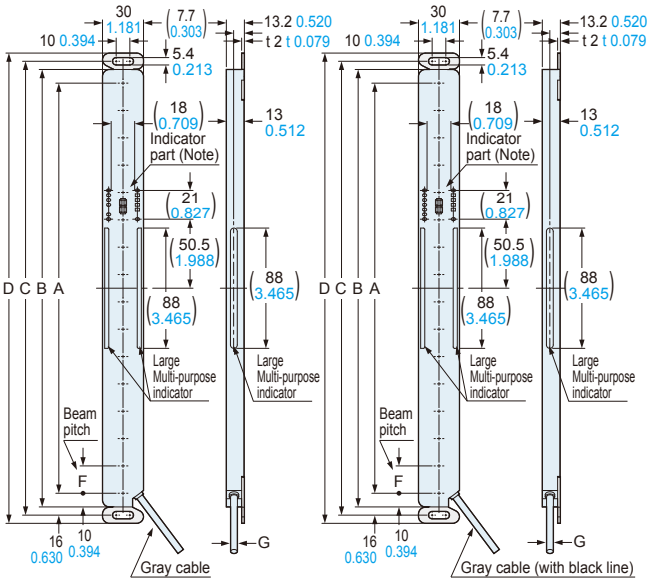

<Dead zoneless mounting>

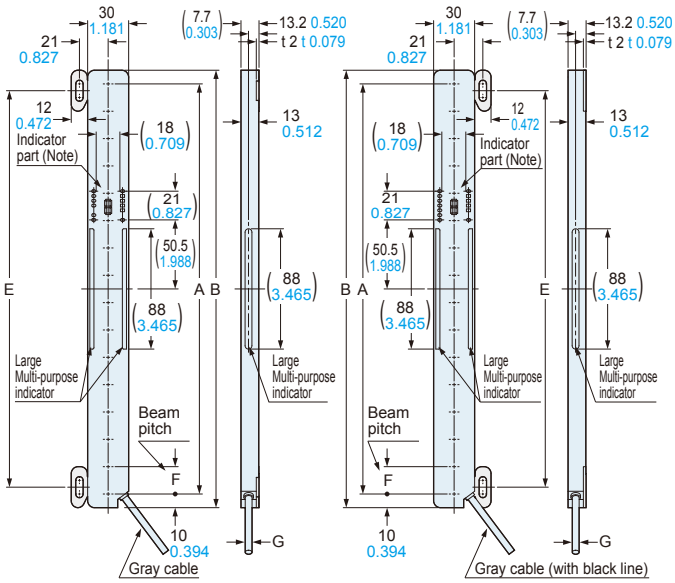

Connector of the pigtailed type SF4C-F□-J05 / SF4C-H□-J05

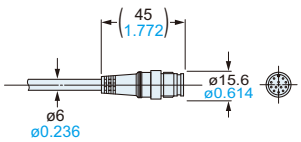

Model No.		A	B	C	D	E
SF4C-F15(-J05)	**SF4C-H8(-J05)**	140 5.512	160 6.299	172 6.772	184 7.244	130 5.118
SF4C-F23(-J05)	**SF4C-H12(-J05)**	220 8.661	240 9.449	252 9.921	264 10.394	210 8.268
SF4C-F31(-J05)	**SF4C-H16(-J05)**	300 11.811	320 12.598	332 13.071	344 13.543	290 11.417
SF4C-F39(-J05)	**SF4C-H20(-J05)**	380 14.961	400 15.748	412 16.220	424 16.693	370 14.567
SF4C-F47(-J05)	**SF4C-H24(-J05)**	460 18.110	480 18.898	492 19.370	504 19.842	450 17.717
SF4C-F55(-J05)	**SF4C-H28(-J05)**	540 21.260	560 22.047	572 22.520	584 22.992	530 20.866
SF4C-F63(-J05)	**SF4C-H32(-J05)**	620 24.409	640 25.197	652 25.669	664 26.142	610 24.016

Model No.	F	G
SF4C-F□(-J05)	10 0.394	ø5 ø0.197
SF4C-H□(-J05)	20 0.787	

Notes: 1) Measurement of drawing above is display section of **SF4C-H□**. In case of **SF4C-F□**, the position of digital error indicator (red) is different as lower figure. Also, digital error indicator (red) is not incorporated in **SF4C-F15□** (**-J05**).

<SF4C-H□> <SF4C-F□>

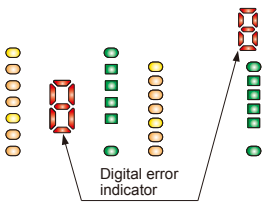

2) The body of the safety light curtain is made of resin, so please take into account the expansion and contraction of the longitudinal dimension. When machining mounting holes, please check the actual product.

DIMENSIONS (Unit: mm in)

The CAD data can be downloaded from our website.

SF4C-F□ SF4C-H□ Safety light curtain

Mounting bracket assembly dimensions

Mounting drawing for the safety light curtains using the versatile brackets **MS-SFC-C3** (optional) and intermediate supporting bracket for versatile brackets **MS-SFC-F4** (optional).

<Rear mounting> **<Dead zoneless mounting>**

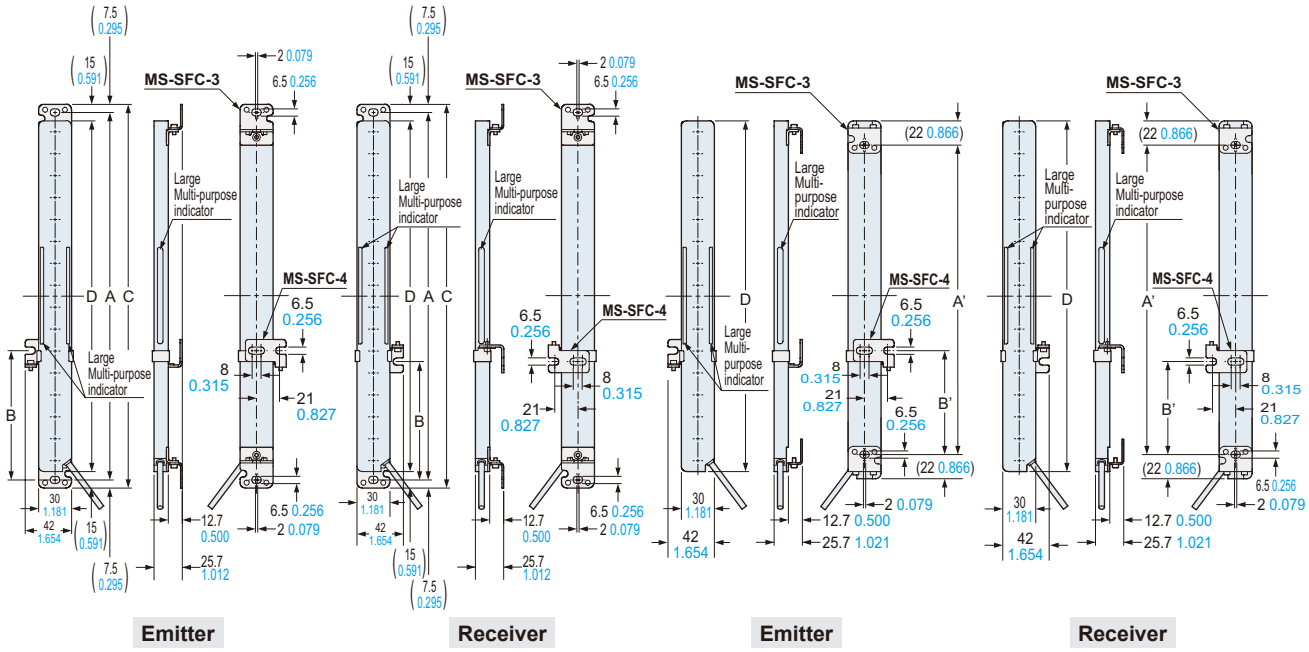

Model No.		Inter mediate sup-porting bracket	A	A'	B	B'	C	D
SF4C-F15(-J05)	**SF4C-H8(-J05)**	—	175 6.890	116 4.567	—	—	190 7.480	160 6.299
SF4C-F23(-J05)	**SF4C-H12(-J05)**	—	255 10.039	196 7.717	—	—	270 10.630	240 9.449
SF4C-F31(-J05)	**SF4C-H16(-J05)**	—	335 13.189	276 10.866	—	—	350 13.780	320 12.598
SF4C-F39(-J05)	**SF4C-H20(-J05)**	—	415 16.339	356 14.016	—	—	430 16.929	400 15.748
SF4C-F47(-J05)	**SF4C-H24(-J05)**	—	495 19.488	436 17.165	—	—	510 20.079	480 18.898
SF4C-F55(-J05)	**SF4C-H28(-J05)**	Available	575 22.638	516 20.315	238 to 338 9.370 to 13.307	209 to 309 8.228 to 12.165	590 23.228	560 22.047
SF4C-F63(-J05)	**SF4C-H32(-J05)**	Available	655 25.787	596 23.465	278 to 378 10.945 to 14.882	249 to 349 9.803 to 13.740	670 26.378	640 25.197

Notes: 1) Be sure to mount **MS-SFC-4** when using **SF4C-F55**(**-J05**), **SF4C-F63**(**-J05**), **SF4C-H28**(**-J05**) and **SF4C-H32**(**-J05**).
2) The body of the safety light curtain is made of resin, so please take into account the expansion and contraction of the longitudinal dimension. When machining mounting holes, please check the actual product.

DIMENSIONS (Unit: mm in)

The CAD data can be downloaded from our website.

MS-SFC-1 Standard mounting bracket (Accessory)

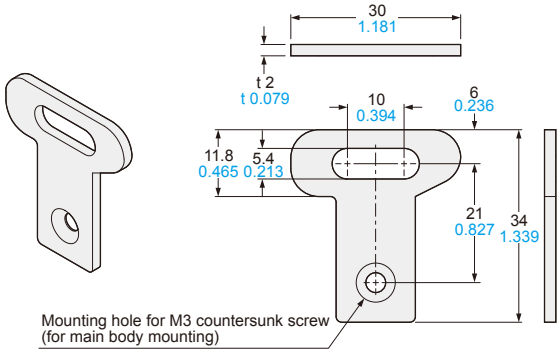

Material: Stainless steel (SUS304)
Net weight: 32 g approx. (4 pcs.)
Package weight: 35 g appox.

Four bracket set
[Four M3 (length 4 mm 0.157 in) countersunk screws are attached.]

MS-SFC-2 NA2-N compatible mounting bracket (Optional)

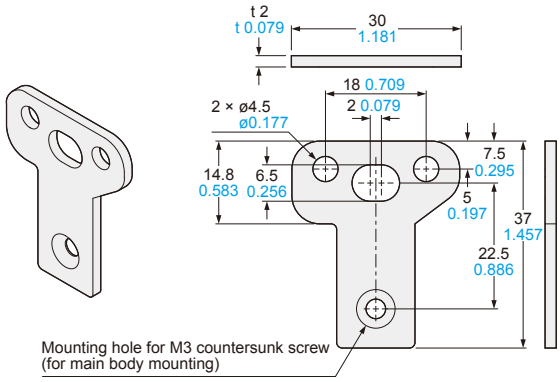

Material: Stainless steel (SUS304)
Net weight: 36 g approx. (4 pcs.)
Package weight: 40 g appox.

Four bracket set
[Four M3 (length 4 mm 0.157 in) countersunk screws are attached.]

MS-SFC-3 Versatile bracket (Optional)

<Rear mounting>

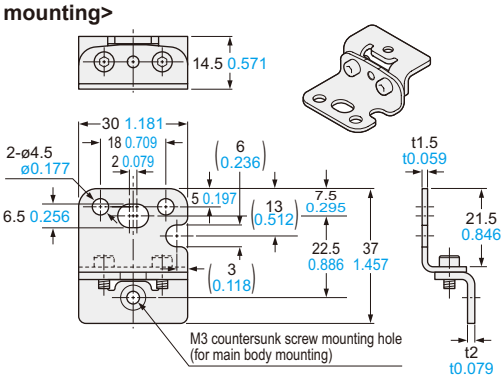

Material: Stainless steel (SUS304)
Net weight: 75 g approx. (4 pcs.)
Package weight: 90 g appox.

Four bracket set
[Four M3 (length 4 mm 0.157 in) countersunk screws are attached.]

<Dead zoneless mounting>

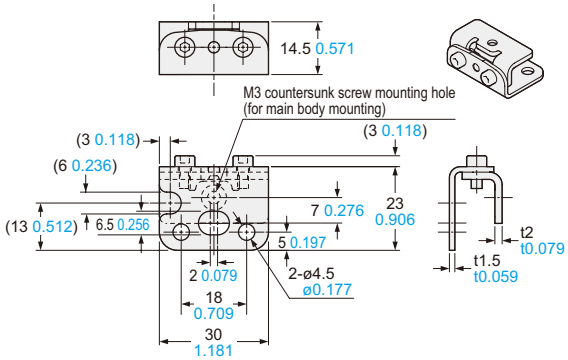

MS-SFC-4 Intermediate supporting bracket for versatile bracket (Optional)

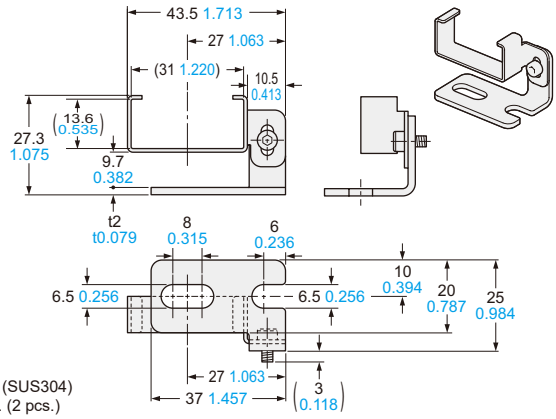

Material: Stainless steel (SUS304)
Net weight: 40 g approx. (2 pcs.)
Package weight: 60 g appox.

Two bracket set

DIMENSIONS (Unit: mm in)

The CAD data can be downloaded from our website.

MS-SFCH-□

Metal protection case (Optional)

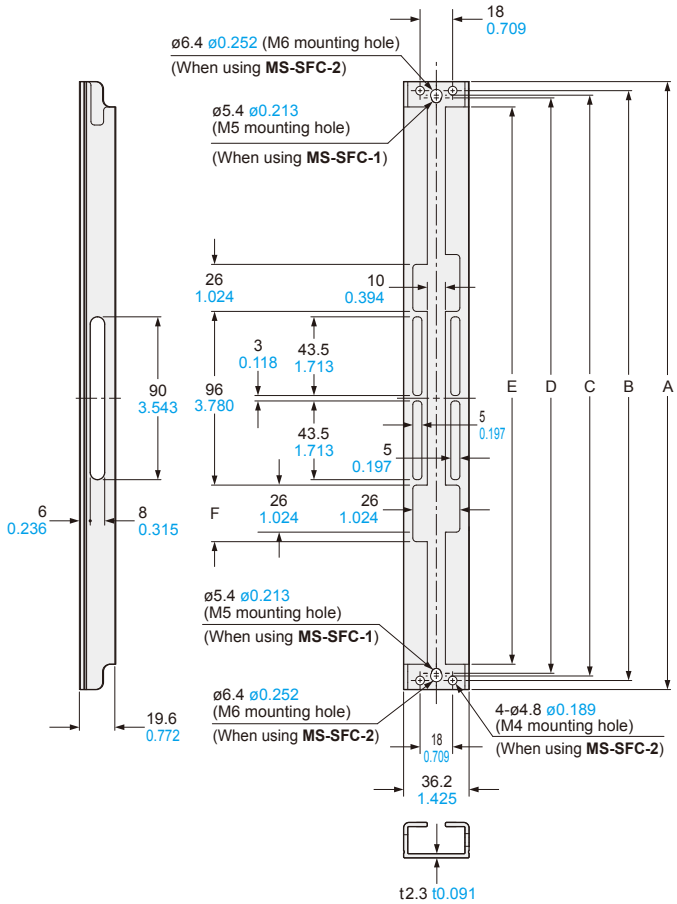

Material: Aluminum

Assembly dimensions

Mounting drawing for the safety light curtains using the metal protection case (**MS-SFCH-□**).

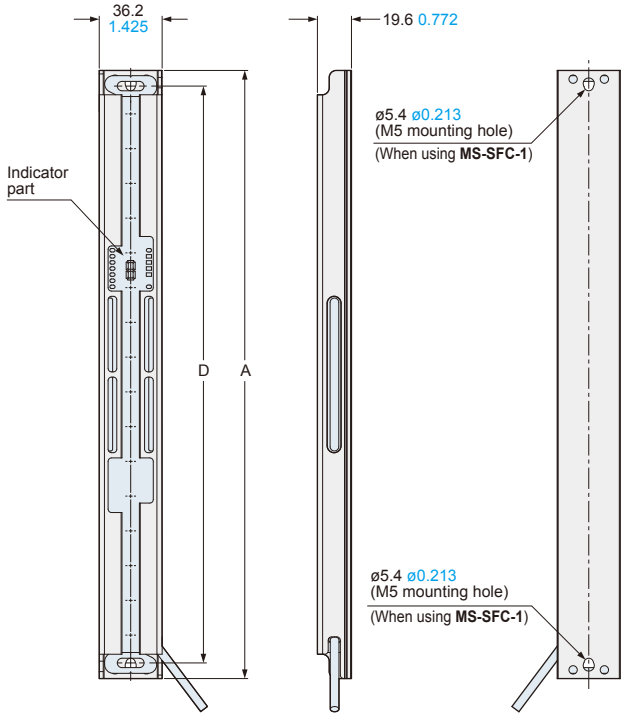

Model No.	A	B	C	D	E	F	Net weight (2 pcs.)
MS-SFCH-8	190 7.480	180 7.087	175 6.890	172 6.772	162 6.378	26 1.024	160 g approx.
MS-SFCH-12	270 10.630	260 10.236	255 10.039	252 9.921	242 9.528	35 1.378	240 g approx.
MS-SFCH-16	350 13.780	340 13.386	335 13.189	332 13.071	322 12.677	35 1.378	340 g approx.
MS-SFCH-20	430 16.929	420 16.535	415 16.339	412 16.220	402 15.827	35 1.378	420 g approx.
MS-SFCH-24	510 20.079	500 19.685	495 19.488	492 19.370	482 18.976	35 1.378	520 g approx.
MS-SFCH-28	590 23.228	580 22.835	575 22.638	572 22.520	562 22.126	35 1.378	600 g approx.
MS-SFCH-32	670 26.378	660 25.984	655 25.787	652 25.669	642 25.276	35 1.378	700 g approx.

DIMENSIONS (Unit: mm in)

The CAD data can be downloaded from our website.

SFB-CC□-MU — Mating cable with connector on one end (Optional)

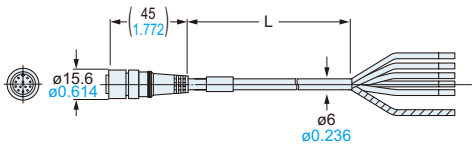

• Length L

Model No.	Length L
SFB-CC3-MU	3,000 118.110
SFB-CC7-MU	7,000 275.590
SFB-CC10-MU	10,000 393.700

SFB-CCJ□-MU — Mating cable with connectors on both ends (Optional)

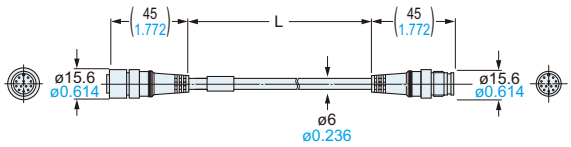

• Length L

Model No.	Length L
SFB-CCJ3D-MU	3,000 118.110
SFB-CCJ3E-MU	
SFB-CCJ10D-MU	10,000 393.700
SFB-CCJ10E-MU	

SFC-WY1 — Y-shaped connector (Optional)

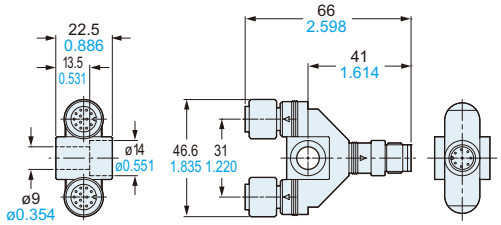

WY1-CCN3 WY1-CCN10 — Mating cable (Optional)

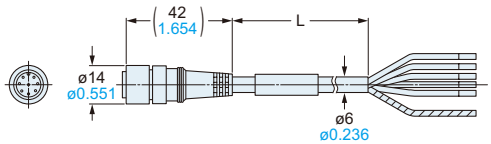

Model No.	Length L
WY1-CCN3	3,000 118.110
WY1-CCN10	10,000 393.700

SFC-HC — Handy-controller (Optional)

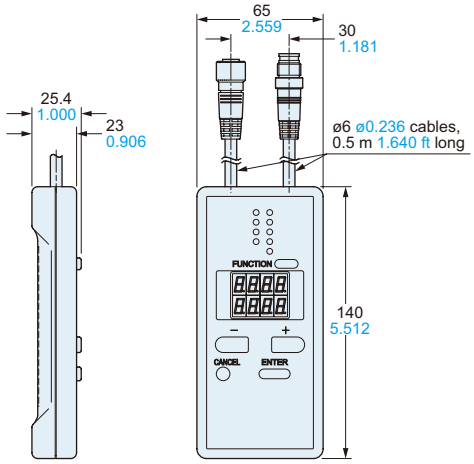

SF-C13 — Control unit (Optional)