MICRO GEAR MOTOR

Range : 6W~250W

Application

- Conveyor
- Ceramic Equipment
- Hopper Equipment
- Lifting & Hoisting Equipment
- Machine Tools
- Pharma Machinery
- Parking Equipment
- Assembly line Equipment
- Animal Husbandry Machine
- Plastic, Packaging & Food Processing

DESIGNATION

MICRO AC MOTOR MODEL NAME

LGM	60	YS	06W	G/D	V22	□
1	2	3	4	5	6	7

1 Product Code

2 Frame Code
60, 70, 80, 90, 100

3 Name Code
YS : Standard Motor
YT : Variable Speed Motor/Reversible
YB : Electromagnetic Brake Motor
YF : Variable Speed Electromagnetic Brake Motor
YR : Damping Brake

4 Power Code
06W, 15W, 25W,40W, 60W, 90W, 120W, 180W, 200W, 250W

5 Rotor Shaft form Code
G : GEAR SHAFT
D : ROUND SHAFT

6 Voltage Code
V11 : SINGLE PHASE 110V
V22 : SINGLE PHASE 220V
Y415/240 : THREE PHASE 220V
Y415/240 : THREE PHASE 380V

7 Derived Code
X : Lead (Line Length 300 mm)
T : With Thermal Protector
H : With Terminal Block

6W	: 60 frame
15W	: 70 frame
25W	: 80 frame
40W / 60W / 90W / 120W	: 90 frame
180W / 200W / 250W	: 100 frame

GEAR BOX MODEL NAME

LGH	60	GK	100	H	□
1	2	3	4	5	6

1 Product Code

2 Frame Code
60, 70, 80, 90, 100,
L80, L90, L100

3 Model Code
GK : 6-25W Gearbox
GF : 40-250W Gearbox

4 Reduction Ratio Code
3, 5, 7.5..... 200

5 Structure Code
H : Standard
HE : Eared / Hinge
RT : Right Angle Solid Shaft
RC : Right Angle Hollow

6 Derived Code
K : Thru Hole

MICRO AC MOTOR COMMON TECHNICAL STANDARDS

INSULATION RESISTANCE : After running at rated settings under normal temperature and humidity, the insulation resistance between the winding and the shell of the motor measured with a DC500V megger should be more than 100MΩ.

INSULATION VOLTAGE : After running at rated settings under normal temperature and humidity, apply 50Hz or 60Hz, 1.5KV between the winding and the shell for one minute, and the motor is normal.

TEMPERATURE RISE : When running at rated settings with gearbox or equivalent heat radiating plate installed, the temperature rise of the winding measured in resistance method is 75K or less.

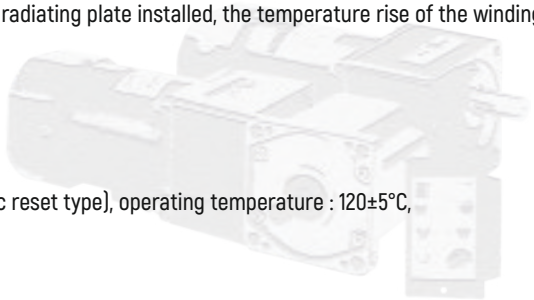

INSULATION CLASS : B (130°C)
OVERHEATING PROTECTION DEVICE : With built-in thermal protection device (automatic reset type), operating temperature : 120±5°C, Reset temperature : 82±15°C (this feature should be customized)

MOTOR PERFORMANCE 6W

Model		(W) Maximum Output Power	Voltage	Frequency	Current	r/min Speed Range	N·mm Start Torque	Rated Torque (m N.m) 1200r/min	Rated Torque (m N.m) 90r/min	Running Capacitor
Gear Shaft	LGM60YS06WGV22	6	Single phase 220	50Hz	0.11	90-1300	38	47	32	0.8μf/450V
	LGM60YT06WGV22									
	LGM60YF06WGV22									
	LGM60YB06WGV22									
Round Shaft	LGM60YS06WDV22			60HZ	0.10	90-1600	40	50	32	
	LGM60YT06WDV22									
	LGM60YF06WDV22									
	LGM60YB06WDV22									

Reduction Ratio Performance Chart

Reduction Ratio		3	3.60	5	6	7.5	10	12.5	15	18	20	25	30
50Hz	r/min Output bearing speed	433	361	260	217	173	130	104	87	72	65	52	43
	N·m Rated Torque	0.13	0.15	0.22	0.26	0.33	0.44	0.55	0.66	0.79	0.88	1.10	1.32
60Hz	r/min Output bearing speed	533	444	320	267	213	160	128	107	89	80	64	53
	N·m Rated Torque	0.11	0.13	0.18	0.22	0.28	0.37	0.46	0.55	0.66	0.73	0.92	1.10
Reduction Ratio		**36**	**40**	**50**	**60**	**75**	**90**	**100**	**120**	**150**	**180**	**200**	
50Hz	r/min Output bearing speed	36	33	26	22	17	14	13	11	9	7	7	
	N·m Rated Torque	1.59	1.76	2.06	2.18	2.42	3	3	8	3	3	3	
60Hz	r/min Output bearing speed	44	40	32	27	21	18	16	13	11	9	8	
	N·m Rated Torque	1.33	1.47	1.71	1.82	2.02	2.42	2.65	3	3	3	3	

MOTOR PERFORMANCE 15W

Model		(W) Maximum Output Power	Voltage	Frequency	Current	r/min Speed Range	N·mm Start Torque	Rated Torque (m N.m) 1200r/min	Rated Torque (m N.m) 90r/min	Running Capacitor
Gear Shaft	LGM70YS15WGV22	15	Single phase 220	50Hz	0.20	90-1300	70	125	45	1.5μf/450V
	LGM70YT15WGV22									
	LGM70YF15WGV22									
	LGM70YB15WGV22									
Round Shaft	LGM70YS15WDV22			60HZ	0.17	90-1600	65	125	45	
	LGM70YT15WDV22									
	LGM70YF15WDV22									
	LGM70YB15WDV22									

Reduction Ratio Performance Chart

Reduction Ratio		3	3.60	5	6	7.5	10	12.5	15	18	20	25	30
50Hz	r/min Output bearing speed	433	361	260	217	173	130	104	87	72	65	52	43
	N·m Rated Torque	0.30	0.36	0.50	0.60	0.74	0.99	1.24	1.49	1.79	1.98	2.31	2.78
60Hz	r/min Output bearing speed	533	444	320	267	213	160	128	107	89	80	64	53
	N·m Rated Torque	0.25	0.30	0.41	0.50	0.62	0.83	1.03	1.24	1.49	1.65	1.93	2.31
Reduction Ratio		**36**	**40**	**50**	**60**	**75**	**90**	**100**	**120**	**150**	**180**	**200**	
50Hz	r/min Output bearing speed	36	33	26	22	17	14	13	11	9	7	7	
	N·m Rated Torque	3.33	3.70	4.63	5	5	5	5	5	5	5	5	
60Hz	r/min Output bearing speed	44	40	32	27	21	18	16	13	11	9	8	
	N·m Rated Torque	2.78	3.09	3.86	4.35	5	5	5	5	5	5	5	

MOTOR PERFORMANCE 25W

Model		(W) Maximum Output Power	Voltage	Frequency	Current	r/min Speed Range	N·mm Start Torque	Rated Torque (m N.m) 1200r/min	Rated Torque (m N.m) 90r/min	Running Capacitor
Gear Shaft	LGM80YS25WGV22	25	Single phase 220	50Hz	0.25	90-1300	145	205	50	2μf/450V
	LGM80YT25WGV22									
	LGM80YF25WGV22									
	LGM80YB25WGV22									
Round Shaft	LGM80YS25WDV22			60HZ	0.23	90-1600	120	205	50	
	LGM80YT25WDV22									
	LGM80YF25WDV22									
	LGM80YB25WDV22									
Gear Shaft	LGM80YS25WGY415/240	25	Three phase 220	50Hz	0.25	90-1300	250	195		
	LGM80YB25WGY415/240									
Round Shaft	LGM80YS25WDY415/240			60Hz	0.23	90-1600	205	160		
	LGM80YB25WDY415/240									
Gear Shaft	LGM80YS25WGY415/240	25	Three phase 380	50Hz	0.14	90-1300	250	195		
	LGM80YB25WGY415/240									
Round Shaft	LGM80YS25WDY415/240			60Hz	0.13	90-1600	205	160		
	LGM80YB25WDY415/240									

Reduction Ratio Performance Chart

Reduction Ratio		3	3.60	5	6	7.5	10	12.5	15	18	20	25	30
50Hz	r/min Output bearing speed	433	361	260	217	173	130	104	87	72	65	52	43
	N·m Rated Torque	0.50	0.6	0.83	0.99	1.24	1.65	1.95	2.34	2.81	3.12	3.90	4.68
60Hz	r/min Output bearing speed	533	444	320	267	213	160	128	107	89	80	64	53
	N·m Rated Torque	0.41	0.5	0.69	0.83	1.03	1.38	1.63	1.95	2.34	2.60	3.25	3.9
Reduction Ratio		**36**	**40**	**50**	**60**	**75**	**90**	**100**	**120**	**150**	**180**	**200**	
50Hz	r/min Output bearing speed	36	33	26	22	17	14	13	11	9	7	7	
	N·m Rated Torque	5.62	6.24	6.89	8	8	8	8	8	8	8	8	
60Hz	r/min Output bearing speed	44	40	32	27	21	18	16	13	11	9	8	
	N·m Rated Torque	4.68	5.20	5.74	6.88	8	8	8	8	8	8	8	

Wiring Diagram (06W~250W)

1 Phase Fixed Speed

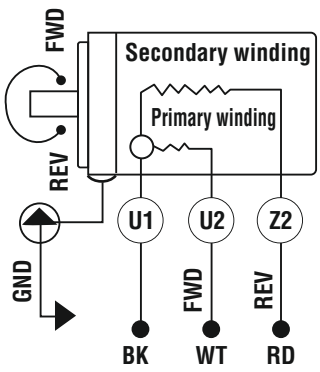

1 Phase Variable Speed

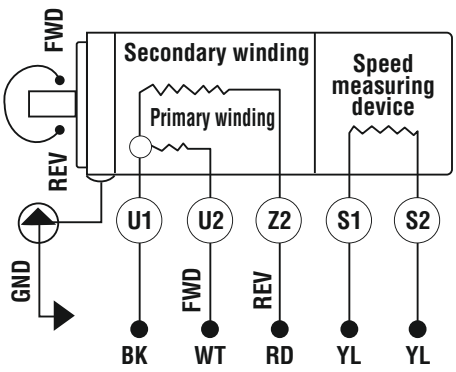

MOTOR PERFORMANCE 40W

Model		(W) Maximum Output Power	Voltage	Frequency	Current	r/min Speed Range	N·mm Start Torque	Rated Torque (m N.m) 1200r/min	Rated Torque (m N.m) 90r/min	Running Capacitor
Gear Shaft	LGM90YS40WGV22	40	Single phase 110	50Hz	0.79	90-1300	235	300	65	3μf/450V
	LGM90YT40WGV22									
	LGM90YF40WGV22									
	LGM90YB40WGV22									
Round Shaft	LGM90YS40WDV22			60HZ	0.71	90-1600	180	260	70	
	LGM90YT40WDV22									
	LGM90YF40WDV22									
	LGM90YB40WDV22									
Gear Shaft	LGM90YS40WGY415/240	40	Three phase 220	50HZ	0.35	90-1300	403	310		
	LGM90YB40WGY415/240									
Round Shaft	LGM90YS40WDY415/240			60Hz	0.32	90-1600	338	260		
	LGM90YB40WDY415/240									
Gear Shaft	LGM90YS40WGY415/240	40	Three phase 380	50Hz	0.21	90-1300	403	310		
	LGM90YB40WGY415/240									
Round Shaft	LGM90YS40WDY415/240			60Hz	0.19	90-1600	338	260		
	LGM90YB40WDY415/240									

Reduction Ratio Performance Chart

Reduction Ratio		3	3.60	5	6	7.5	10	12.5	15	18	20	25	30
50Hz	r/min Output bearing speed	433	361	260	217	173	130	104	87	72	65	52	43
	N·m Rated Torque	0.77	0.92	1.28	1.53	1.92	2.56	3.20	3.83	4.60	5.11	5.73	6.88
60Hz	r/min Output bearing speed	533	444	320	267	213	160	128	107	89	80	64	53
	N·m Rated Torque	0.64	0.77	1.07	1.28	1.60	2.13	2.66	3.20	3.83	4.28	4.78	5.73
Reduction Ratio		**36**	**40**	**50**	**60**	**75**	**90**	**100**	**120**	**150**	**180**	**200**	
50Hz	r/min Output bearing speed	36	33	26	22	17	14	13	11	9	7	7	
	N·m Rated Torque	8.25	9.17	10	10	10	10	10	10	10	10	10	
60Hz	r/min Output bearing speed	44	40	32	27	21	18	16	13	11	9	8	
	N·m Rated Torque	6.88	7.64	9.16	10	10	10	10	10	10	10	10	

Wiring Diagram (06W~250W)

1 Phase Fixed Speed with brake

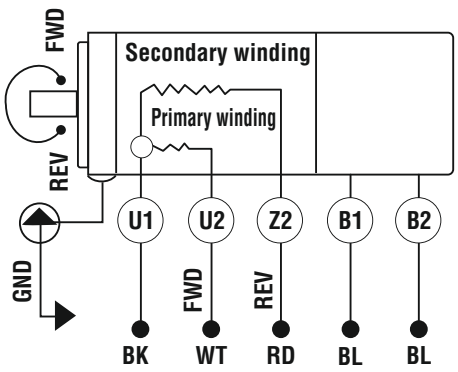

1 Phase Variable Speed with brake

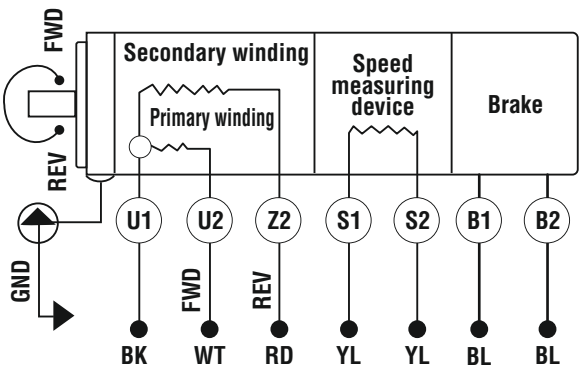

MOTOR PERFORMANCE 60W

Model		(W) Maximum Output Power	Voltage	Frequency	Current	r/min Speed Range	N·mm Start Torque	Rated Torque (m N.m) 1200r/min	Rated Torque (m N.m) 90r/min	Running Capacitor
Gear Shaft	LGM90YS60WGV22	60	Single phase 220	50Hz	0.62	90-1300	350	490	200	4μf/450V
	LGM90YT60WGV22									
	LGM90YF60WGV22									
	LGM90YB60WGV22									
Round Shaft	LGM90YS60WDV22			60HZ	0.57	90-1600	280	490	200	
	LGM90YT60WDV22									
	LGM90YF60WDV22									
	LGM90YB60WDV22									
Gear Shaft	LGM90YS60WGY415/240	60	Three phase 220	50Hz	0.53	90-1300	600	460		
	LGM90YB60WGY415/240									
Round Shaft	LGM90YS60WDY415/240	60		60Hz	0.48	90-1600	490	375		
	LGM90YB60WDY415/240									
Gear Shaft	LGM90YS60WGY415/240	60	Three phase 380	50Hz	0.32	90-1300	600	460		
	LGM90YB60WGY415/240									
Round Shaft	LGM90YS60WDY415/240	60		50Hz	0.29	90-1300	490	375		
	LGM90YB60WDY415/240									

Reduction Ratio Performance Chart

Reduction Ratio		3	3.60	5	6	7.5	10	12.5	15	18	20	25	30
50Hz	r/min Output bearing speed	433	361	260	217	173	130	104	87	72	65	52	43
	N·m Rated Torque	1.19	1.43	1.98	2.36	2.96	3.97	4.35	5.22	6.27	6.96	8.26	9.92
60Hz	r/min Output bearing speed	533	444	320	267	213	160	128	107	80	80	64	53
	N·m Rated Torque	0.99	1.19	1.65	1.98	2.48	3.31	3.63	4.35	5.80	5.80	6.89	8.26
Reduction Ratio		**36**	**40**	**50**	**60**	**75**	**90**	**100**	**120**	**150**	**180**	**200**	
50Hz	r/min Output bearing speed	36	33	26	22	17	14	13	11	9	7	7	
	N·m Rated Torque	11.90	13.22	16.53	19.83	20	20	20	20	20	20	20	
60Hz	r/min Output bearing speed	44	40	32	27	21	18	16	13	11	9	8	
	N·m Rated Torque	9.92	11.02	13.77	16.53	20	20	20	20	20	20	20	

Wiring Diagram (25W~250W)

3 Phase without brake

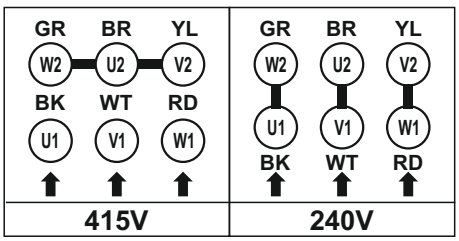

3 Phase with brake

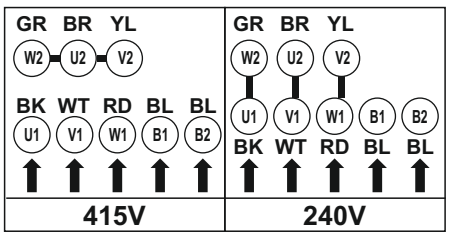

MOTOR PERFORMANCE 90W

Model		(W) Maximum Output Power	Voltage	Frequency	Current	r/min Speed Range	N·mm Start Torque	Rated Torque (m N.m) 1200r/min	Rated Torque (m N.m) 90r/min	Running Capacitor
Gear Shaft	LGM90YS90WGV22	90	Single phase 110	50Hz	0.95	90-1300	525	710	200	5μf/450V
	LGM90YT90WGV22									
	LGM90YB90WGV22									
	LGM90YF90WGV22									
Round Shaft	LGM90YS90WDV22			60HZ	0.86	90-1600	420	710	200	
	LGM90YT90WDV22									
	LGM90YB90WDV22									
	LGM90YF90WDV22									
Gear Shaft	LGM90YS90WGY415/240	90	Three phase 220	50Hz	0.69	90-1300	910	700		
	LGM90YB90WGY415/240									
Round Shaft	LGM90YS90WDY415/240			60Hz	0.63	90-1600	730	560		
	LGM90YB90WDY415/240									
Gear Shaft	LGM90YS90WGY415/240	90	Three phase 380	50Hz	0.41	90-1300	910	700		
	LGM90YB90WGY415/240									
Round Shaft	LGM90YS90WDY415/240			60Hz	0.38	90-1300	730	560		
	LGM90YB90WDY415/240									

Reduction Ratio Performance Chart

Reduction Ratio		3	3.60	5	6	7.5	10	12.5	15	18	20	25	30
50Hz	r/min Output bearing speed	433	361	260	217	173	130	104	87	72	65	52	43
	N·m Rated Torque	1.79	2.14	2.98	3.57	4.46	5.29	6.61	7.93	9.52	10.58	12.07	14.48
60Hz	r/min Output bearing speed	533	444	320	267	213	160	128	107	89	80	64	53
	N·m Rated Torque	1.49	1.79	2.48	2.98	3.72	4.41	5.51	6.61	7.93	8.82	10.06	12.07
Reduction Ratio		**36**	**40**	**50**	**60**	**75**	**90**	**100**	**120**	**150**	**180**	**200**	
50Hz	r/min Output bearing speed	36	33	26	22	17	14	13	11	9	7	7	
	N·m Rated Torque	17.38	19.31	20	20	20	20	20	20	20	20	20	
60Hz	r/min Output bearing speed	44	40	32	27	21	18	16	13	11	9	8	
	N·m Rated Torque	14.48	16.09	20	20	20	20	20	20	20	20	20	

Gear Head / Gear Box Type

H type
(Standard)

HE type
(Eared/Hinge)

RC type
(Right Angle-Hollow Shaft)

RT type
(Right Angle-Solid Shaft)

MOTOR PERFORMANCE 120W

Model		(W) Maximum Output Power	Voltage	Frequency	Current	r/min Speed Range	N·mm Start Torque	Rated Torque (m N.m) 1200r/min	90r/min	Running Capacitor
Gear Shaft	LGM90YS120WGV22	120	Single phase 220	50Hz	1.02	90-1300	720	840	300	6μf/450V
	LGM90YT120WGV22									
	LGM90YB120WGV22									
	LGM90YF120WGV22									
Round Shaft	LGM90YS120WDV22			60Hz	0.92	90-1600	600	840	300	
	LGM90YT120WDV22									
	LGM90YB120WDV22									
	LGM90YF120WDV22									
Gear Shaft	LGM90YS120WGY415/240	120	Three phase 220	50Hz	0.89	90-1300	1195	924		
	LGM90YB120WGY415/240									
Round Shaft	LGM90YS120WDY415/240	120		60Hz	0.81	90-1600	1014	750		
	LGM90YB120WDY415/240									
Gear Shaft	LGM90YS120WGY415/240	120	Three phase 380	50Hz	0.51	90-1300	1195	924		
	LGM90YB120WGY415/240									
Round Shaft	LGM90YS120WDY415/240	120		50Hz	0.45	90-1300	1014	750		
	LGM90YB120WDY415/240									

Reduction Ratio Performance Chart

Reduction Ratio		3	3.60	5	6	7.5	10	12.5	15	18	20	25	30
50Hz	r/min Output bearing speed	433	361	260	217	173	130	104	87	72	65	52	43
	N·m Rated Torque	2.25	2.70	3.75	4.50	5.62	6.88	8.60	10.31	12.38	13.75	15.43	18.51
60Hz	r/min Output bearing speed	533	444	320	267	213	160	128	107	89	80	64	53
	N·m Rated Torque	1.87	2.25	3.12	3.75	4.68	5.73	7.16	8.60	10.31	11.46	12.86	15.43
Reduction Ratio		**36**	**40**	**50**	**60**	**75**	**90**	**100**	**120**	**150**	**180**	**200**	
50Hz	r/min Output bearing speed	36	33	26	22	17	14	13	11	9	7	7	
	N·m Rated Torque	20	20	20	20	20	20	20	20	20	20	20	
60Hz	r/min Output bearing speed	44	40	32	27	21	18	16	13	11	9	8	
	N·m Rated Torque	18.51	20	20	20	20	20	20	20	20	20	20	

Motor Type

Motor with Round Shaft

Motor with Pinion Shaft

MOTOR PERFORMANCE 180W

Model		(W) Maximum Output Power	Voltage	Frequency	Current	r/min Speed Range	N·mm Start Torque	Rated Torque (m N.m) 1200r/min 90r/min	Running Capacitor
Gear Shaft	LGM100YS180WGV22	180	Single phase 220	50Hz	1.50	90-1300	1050	1450	10μf/450V
	LGM100YT180WGV22								
	LGM100YB180WGV22								
	LGM100YF180WGV22								
Round Shaft	LGM100YS180WDV22			60HZ	1.35	90-1600	880	1450	
	LGM100YT180WDV22								
	LGM100YB180WDV22								
	LGM100YF180WDV22								
Gear Shaft	LGM100YS180WGY415/240	180	Three phase 220	50Hz	1.30	90-1300	1790	1418	
	LGM100YB180WGY415/240								
Round Shaft	LGM100YS180WDY415/240			60Hz	1.17	90-1600	1523	1135	
	LGM100YB180WDY415/240								
Gear Shaft	LGM100YS180WGY415/240	180	Three phase 380	50Hz	0.75	90-1300	1790	1418	
	LGM100YB180WGY415/240								
Round Shaft	LGM100YS180WDY415/240			60Hz	0.67	90-1600	1523	1135	
	LGM100YB180WDY415/240								

Reduction Ratio Performance Chart

Reduction Ratio		3	3.60	5	6	7.5	10	12.5	15	18	20	25	30
50Hz	r/min Output bearing speed	433	361	260	217	173	130	104	87	72	65	52	43
	N·m Rated Torque	3.10	3.72	5.16	6.19	7.74	10.32	12.9	15.48	18.58	20.64	25.8	30.96
60Hz	r/min Output bearing speed	533	444	320	267	213	160	128	107	89	80	64	53
	N·m Rated Torque	2.78	3.31	4.60	5.52	6.90	9.20	11.50	13.80	16.56	18.40	23.0	27.6
Reduction Ratio		**36**	**40**	**50**	**60**	**75**	**90**	**100**	**120**	**150**	**180**	**200**	
50Hz	r/min Output bearing speed	36	33	26	22	17	14	13	11	9	7	7	
	N·m Rated Torque	37.15	41.28	44	44	44	44	44	44	44	44	44	
60Hz	r/min Output bearing speed	44	40	32	27	21	18	16	13	11	9	8	
	N·m Rated Torque	33.48	37.2	44	44	44	44	44	44	44	44	44	

Motor Type

Motor with Terminal Box

Motor without Terminal Box

MOTOR PERFORMANCE 200W

Model		(W) Maximum Output Power	Voltage	Frequency	Current	r/min Speed Range	N·mm Start Torque	Rated Torque (m N.m) 1200r/min	Rated Torque (m N.m) 90r/min	Running Capacitor
Gear Shaft	LGM100YS200WGV22	200	Single phase 220	50Hz	1.69	90-1300	1150	1650	350	10μf/450V
	LGM100YT200WGV22									
	LGM100YB200WGV22									
	LGM100YF200WGV22									
Round Shaft	LGM100YS200WDV22			60HZ	1.54	90-1600	930	1330	350	
	LGM100YT200WDV22									
	LGM100YB200WDV22									
	LGM100YF200WDV22									
Gear Shaft	LGM100YS200WGY415/240	200	Three phase 220	50Hz	1.82	90-1300	1990	1540		
	LGM100YB200WGY415/240									
Round Shaft	LGM100YS200WDY415/240			60Hz	1.64	90-1600	1690	1250		
	LGM100YB200WDY415/240									
Gear Shaft	LGM100YS200WGY415/240	200	Three phase 380	50Hz	1.05	90-1300	1990	1540		
	LGM100YB200WGY415/240									
Round Shaft	LGM100YS200WDY415/240			60Hz	0.95	90-1600	1690	1250		
	LGM100YB200WDY415/240									

Reduction Ratio Performance Chart

Reduction Ratio		3	3.60	5	6	7.5	10	12.5	15	18	20	25	30
50Hz	r/min Output bearing speed	433	361	260	217	173	130	104	87	72	65	52	43
	N·m Rated Torque	3.44	4.13	5.73	6.88	8.60	11.46	14.33	17.19	18.51	20.57	25.71	30.85
60Hz	r/min Output bearing speed	533	444	320	267	213	160	128	107	89	80	64	53
	N·m Rated Torque	2.87	3.44	4.78	5.73	7.16	9.55	11.94	14.33	15.43	17.14	21.43	25.71
Reduction Ratio		**36**	**40**	**50**	**60**	**75**	**90**	**100**	**120**	**150**	**180**	**200**	
50Hz	r/min Output bearing speed	36	33	26	22	17	14	13	11	9	7	7	
	N·m Rated Torque	37.02	41.14	44	44	44	44	44	44	44	44	44	
60Hz	r/min Output bearing speed	44	40	32	27	21	18	16	13	11	9	8	
	N·m Rated Torque	30.85	34.28	42.85	44	44	44	44	44	44	44	44	

Gear Head & Motor Combination

Standard Motor+
Standard Gear Box

Standard Motor+
Eared Gear Box

Standard Motor+
Right Angle Hollow
Gear Box

Standard Motor+
Right Angle Solid
Gear Box

MOTOR PERFORMANCE 250W

Model		(W) Maximum Output Power	Voltage	Frequency	Current	r/min Speed Range	N·mm Start Torque	Rated Torque (m N.m) 1200r/min 90r/min	Running Capacitor
Gear Shaft	LGM100YS250WGV22	250	Single phase 220	50Hz	1.69	90-1300	1150	1650	12μf/450V
	LGM100YT250WGV22								
	LGM100YB250WGV22								
	LGM100YF250WGV22								
Round Shaft	LGM100YS250WDV22			60HZ	1.54	90-1600	930	1330	
	LGM100YT250WDV22								
	LGM100YB250WDV22								
	LGM100YF250WDV22								
Gear Shaft	LGM100YS250WGY415/240	250	Three phase 220	50Hz	1.82	90-1300	1990	1540	
	LGM100YB250WGY415/240								
	LGM100YS250WDY415/240			60Hz	1.64	90-1600	1690	1250	
	LGM100YB250WDY415/240								
Round Shaft	LGM100YS250WGY415/240	250	Three phase 380	50Hz	1.05	90-1300	1990	1540	
	LGM100YB250WGY415/240								
	LGM100YS250WDY415/240			50Hz	0.95	90-1600	1690	1250	
	LGM100YB250WDY415/240								

Reduction Ratio Performance Chart

Reduction Ratio		3	3.60	5	6	7.5	10	12.5	15	18	20	25	30
50Hz	r/min Output bearing speed	433	361	260	217	173	130	104	87	72	65	52	43
	N·m Rated Torque	3.44	4.13	5.73	6.88	8.60	11.46	14.33	17.19	18.51	20.57	25.71	30.85
60Hz	r/min Output bearing speed	533	444	320	267	213	160	128	107	89	80	64	53
	N·m Rated Torque	2.87	3.44	4.78	5.73	7.16	9.55	11.94	14.33	15.43	17.14	21.43	25.71
Reduction Ratio		**36**	**40**	**50**	**60**	**75**	**90**	**100**	**120**	**150**	**180**	**200**	
50Hz	r/min Output bearing speed	36	33	26	22	17	14	13	11	9	7	7	
	N·m Rated Torque	37.02	41.14	44	44	44	44	44	44	44	44	44	
60Hz	r/min Output bearing speed	44	40	32	27	21	18	16	13	11	9	8	
	N·m Rated Torque	30.85	34.28	42.85	44	44	44	44	44	44	44	44	

ANALOG SPEED CONTROLLER

FEATURES

- Achieve continuously variable transmission in a wide range combined with variable speed motor
- Feature-rich, enabling slow acceleration, slow deceleration and motor stall protection
- The capacitor for speed controller running is mounted directly inside the controller, featuring neat and convenient wiring

MODEL PARAMETERS

Model	WSP
Installation Method	Panel
Speed Regulation	Panel potentiometer
Supply Voltage	220V Single Phase 220V
Control Features	Speed Control, Slow acceleration, Slow Deceleration, Electronic Brake
Applicable Motor Power Range	6W~250W
Running Capacitor	Built-in
Power Frequency	50 / 60Hz
Speed Range	50Hz : 90~1300r/min 60Hz : 90~1600r/min
Rate of Speed Change	5%
Electronic Braking Time	0.4 sec
Environment of Use	-10°C~+40°C No freezing, <85% (No condensation)

MULTI-FUNCTION SPEED CONTROLLER

FEATURES

- Achieve continuously variable transmission in a wide range combined with variable speed motor
- Feature-rich, enabling slow acceleration, slow deceleration and motor stall protection
- The capacitor for speed controller running is mounted directly inside the controller, featuring neat and convenient wiring

MODEL PARAMETERS

Model	WXK
Installation Method	Multi-Function(Built-in)
Speed Regulation	Panel Key and potentiometer
Supply Voltage	220Vac Single Phase 220Vac
Control Features	Speed control, Slow acceleration, Slow deceleration, Electronic brake, Stall protection, Panel Control Forward and reverse rotation, Speed display, Digital display key controlled
Applicable Motor Power Range	6W~250W
Running Capacitor	Built-in
Power Frequency	50 / 60Hz
Speed Range	50Hz : 90~1300r/min 60Hz : 90~1600r/min
Rate of Speed Change	5%
Electronic Braking Time	0.4 sec
Environment of Use	-10°C~+40°C No freezing, <85% (No condensation)

Lubi Electronics

Sardar Patel Ring Road, Nr. Karai Gam Patia, Nana Chiloda, Dist. : Gandhinagar - 382 330, Gujarat, INDIA
Tel. : +91-79-6674 5300 • Fax : +91-79-6674 5599
E-mail : info@lubielectronics.com • Website : www.lubielectronics.com